HUSSONG MANUFACTURING CO., INC.
P.O. Box 557, 204 Industrial Park Road
Lakefield, Minnesota USA 56150-0577

Corner and Bay Fireplace Conversion Addendum

Generation 7220 Screen

Model # GEN-7220S

Direct Vent Gas Fireplace

English and French installation manuals are available through your local dealer or website. Visit our website *www.kozyheat.com*.

Les manuels d'installation en français et en anglais sont disponibles chez votre détaillant local. Visitez *www.kozyheat.com*.

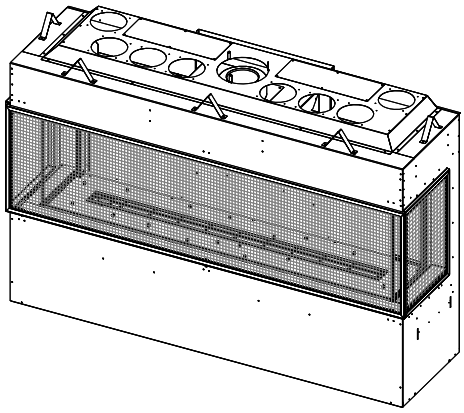

NATIONAL FIREPLACE INSTITUTE NFI CERTIFIED www.nficertified.org — We suggest that our gas hearth products be installed and serviced by professionals who are certified in the U.S. by the National Fireplace Institute® (NFI) as NFI Gas Specialists.

PFS® C US

⚠ WARNING:

FIRE OR EXPLOSION HAZARD

Failure to follow safety warnings exactly could result in serious injury, death, or property damage.

- **Do not** store or use gasoline or other flammable vapors and liquids in the vicinity of this or any other appliance.
- Installation and service must be performed by a qualified installer, service agency or the gas supplier.
- **CAUTION**: Before fireplace start-up, check all connections for leaks with soapy water, whether field or factory made.

WHAT TO DO IF YOU SMELL GAS

- **Do not** try to light any appliance.
- **Do not** touch any electrical switch**; Do not** use any phone in your building.
- Leave the building immediately.
- Immediately call your gas supplier from a neighbor's phone. Follow the gas supplier's Instructions.
- If you cannot reach your gas supplier, call the fire department.

This appliance may be installed in an aftermarket, permanently located, manufactured home (USA only) or mobile home, where not prohibited by local codes.

This appliance is only for use with the type of gas indicated on the rating plate. A conversion kit is supplied with the appliance.

⚠ DANGER

HOT GLASS WILL CAUSE BURNS

DO NOT TOUCH GLASS UNTIL COOLED

NEVER ALLOW CHILDREN TO TOUCH GLASS

A barrier designed to reduce the risk of burns from the hot viewing glass is provided with this appliance and shall be installed for the protection of children and other at-risk individuals.

INSTALLER: Leave this manual with the appliance.

CONSUMER: Retain this manual for future reference.

Table of Contents

1.0 Appliance Information and Preparation 3

1.1 Single-Sided to a Corner or Three-Sided (Bay) Fireplace Conversion 3
1.2 Safety Screen Barriers..... 6
1.3 Typical Corner Fireplace Installations 7
1.4 Typical 3-Sided (Bay) Fireplace Installations 8
1.5 Clearances to Combustibles..... 9
1.6 Mounting a Television Above a Fireplace and Television Recess Construction..... 10
1.7 Clearance to Sprinkler 12
1.8 Wall Thimble Framing Instructions - Minimum Horizontal 12

2.0 Corner Installation 13

2.1 Framing..... 13
2.2 Facing and Finishing Material Requirements..... 14
2.3 Requirements to Cool the Fireplace Chamber..... 15
2.4 Hearth, Mantel, Front Chamber Projection, and Side Chamber Projection for KZK Options 23
2.5 Hearth, Mantel, Front Chamber, and Side Chamber Projection for Vented Cavity Options..... 27
2.6 Clearance to a Sidewall..... 33

3.0 Three-Sided (Bay) Installation 34

3.1 Framing..... 34
3.2 Facing and Finishing Material Requirements..... 35
3.3 Requirements to Cool the Fireplace Chamber..... 36
3.4 Hearth, Mantel, Front Chamber Projection, and Side Chamber Projection for KZK Options 50
3.5 Hearth, Mantel, Front Chamber, and Side Chamber Projection for Vented Cavity Options..... 54
3.6 Clearance to a Sidewall..... 59

4.0 Fireplace Setup 60

4.1 Safety Screen Barriers..... 60
4.2 Perimeter Media Tray 62
4.3 Firebox Glass..... 63
4.4 Control Board Removal and Installation 67

5.0 Replacement Parts List 71

1.0 Appliance Information and Preparation

NOTE: This addendum manual does not include all the information you need for your fireplace installation. You will need to refer to the single side manual that shipped with the fireplace for information that pertains to all installation scenarios. This addendum only includes information specific to a corner or 3-sided (Bay) installation.

1.1 Single-Sided to a Corner or Three-Sided (Bay) Fireplace Conversion

This section outlines the procedure to convert the appliance from the standard single-sided fireplace to a corner or three-sided (Bay) fireplace. The fireplace is shipped with block-off plates on both sides. If you are converting the fireplace to be installed as a left or right corner fireplace you will install (1) Corner Conversion Kit (Part# GENLS-CCK) and if installing as a 3-Sided (Bay) fireplace install (2) Corner Conversion Kits (Part# GENLS-CCK).

Figure 1.1 shows the full conversion process for both sides of the fireplace. If you want a corner fireplace then only remove the block off plate for the side of the fireplace you want visible and perform the conversion to that side.

Note: You may find it easier to install the black glass panels (rear interior panels and rear perimeter panels) after this conversion is completed but before you install the safety screens.

1. Remove and discard the nailing flanges and side block off plates for one or both sides depending on your installation choice. See Figure 1.1. Save these screws for Step 2.
2. Install the top finishing edge bracket. Make sure the bracket is centered and attach with (2) sheet metal screws. Install the (2) top magnet brackets with (2) sheet metal screws per bracket. See Figure 1.2
3. Install the bottom finishing edge bracket. This bottom bracket is pressure fit so push it in between the outer shell and the retention bracket. The bottom magnetic screen brackets have PEM studs and install them in the holes as shown in Figure 1.2. Secure with the supplied 7/16” nuts to the PEM studs.

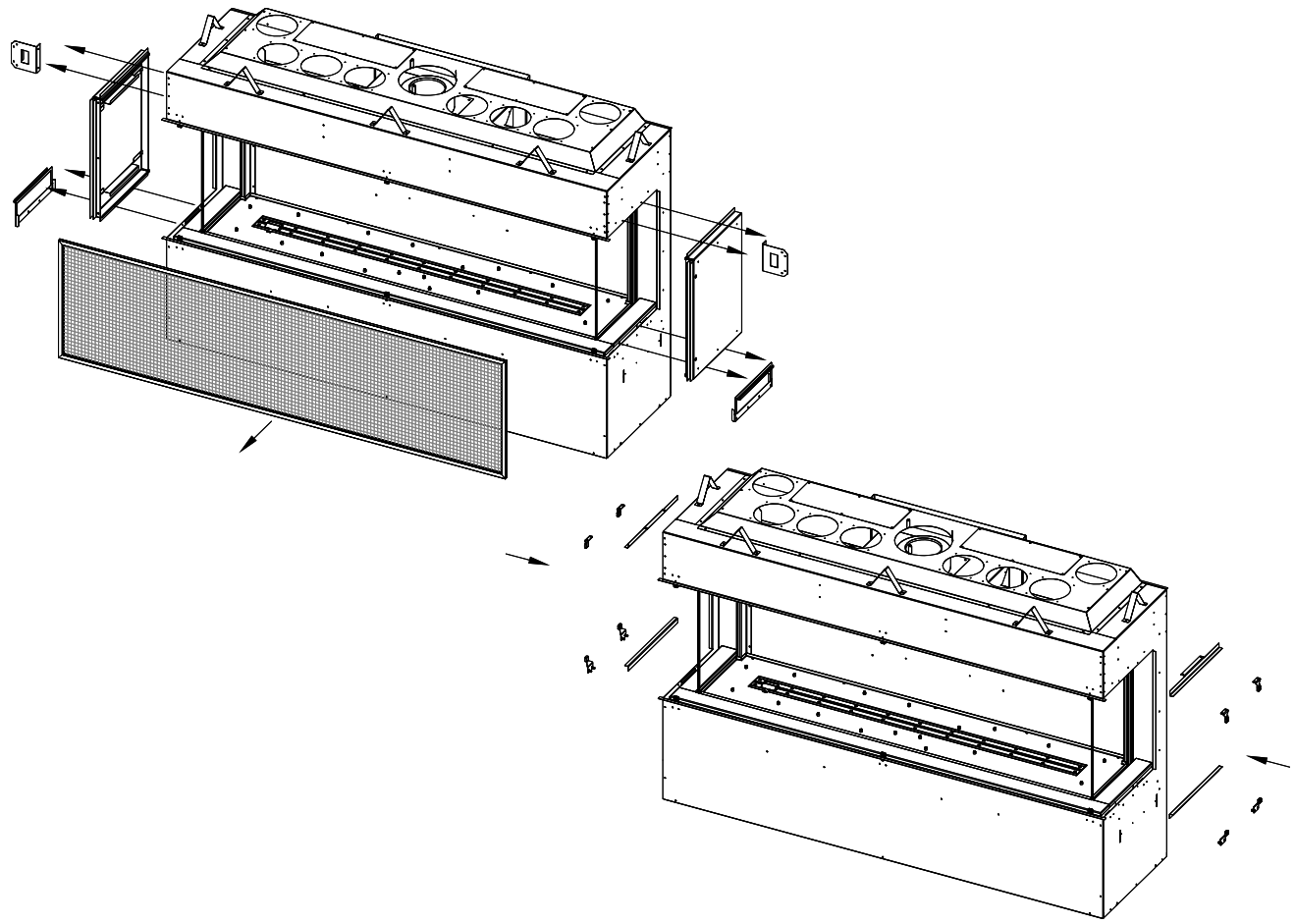

Figure 1.1 - Fireplace Conversion

1.1 Single-Sided to a Corner or Three-Sided (Bay) Fireplace Conversion (continued)

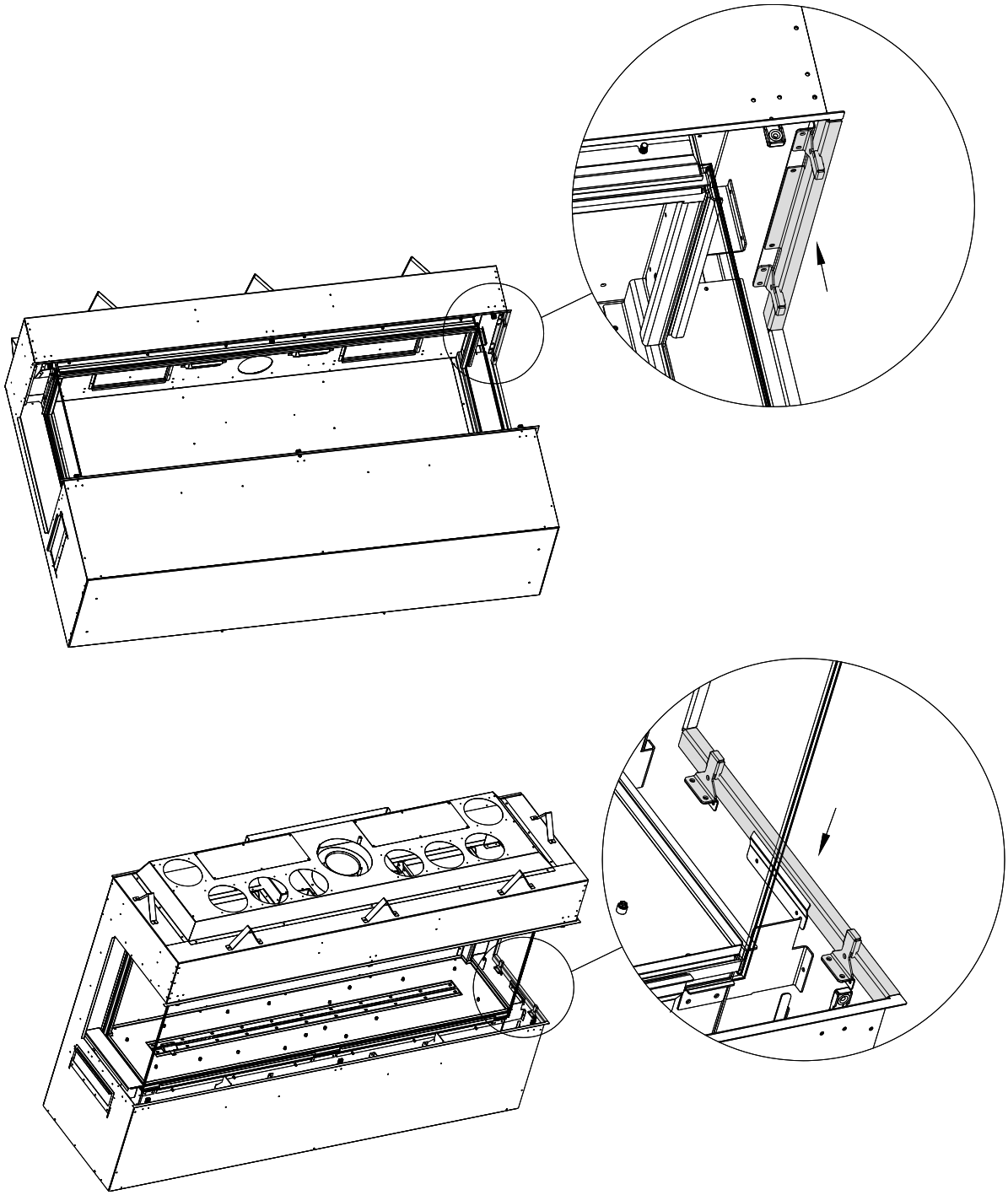

Figure 1.2 - Fireplace Conversion

1.1 Single-Sided to a Corner or Three-Sided (Bay) Fireplace Conversion (continued)

Each conversion kit will include (1) glass edge cover. Figure 1.3 shows the installation of this cover in a right corner application. The purpose of this cover is to provide a finished appearance on the back edge of the glass.

Positioning the glass edge cover.

The pre-bent flange goes to the backside of the firebox glass. Bend the top alignment tab to a 90° angle so it will rest on the topside of the glass. Bend the bottom tab to 180° so it is flat against the cover. The magnets will align with the back edge of the glass and secure the cover.

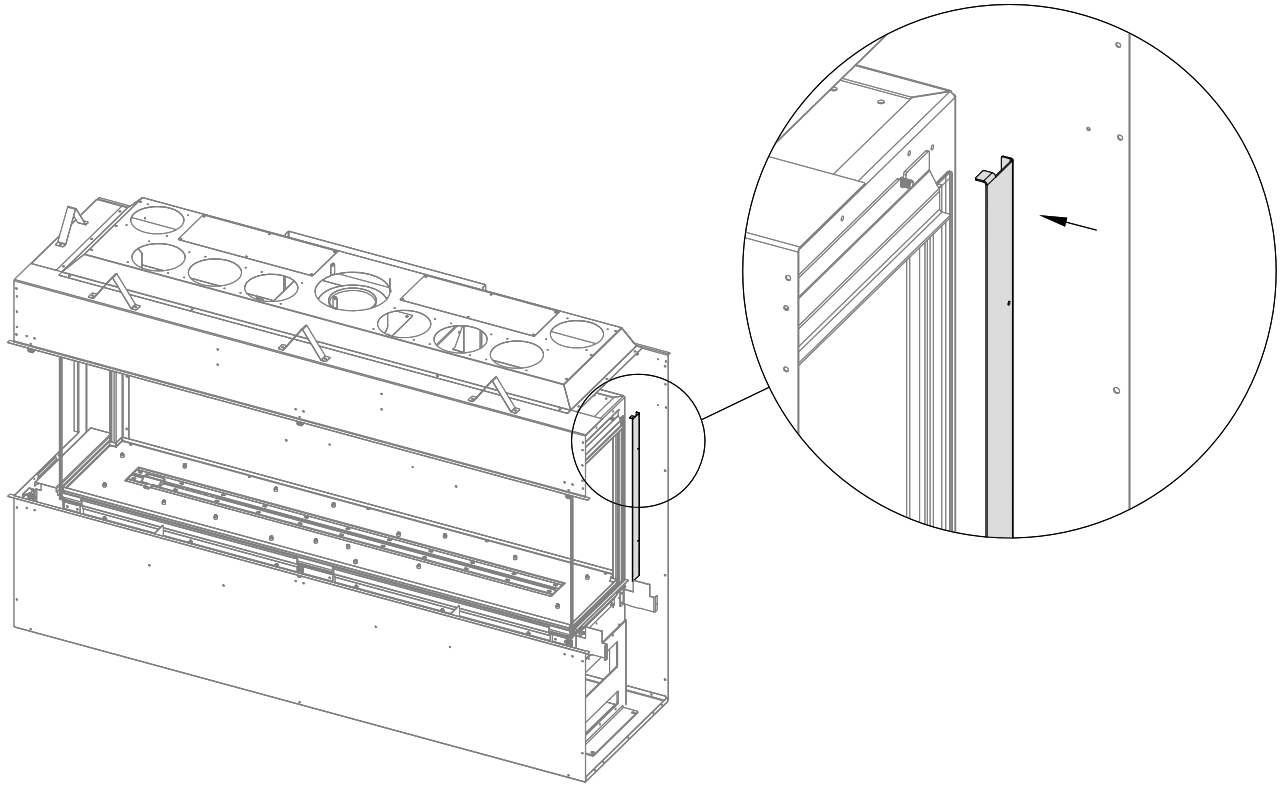

Figure 1.3 - Glass Edge Cover Installation

1.2 Safety Screen Barriers

WARNING: A barrier designed to reduce the risk of burns from the hot viewing glass is provided with this appliance and shall be installed for the protection of children and other at-risk individuals.

If the barrier becomes damaged, the barrier shall be replaced with Hussong Mfg.'s barriers for this appliance.

Please refer to Section 4.1 Safety Screen Barriers, for installation information.

Any safety screen, guard, or barrier removed for servicing an appliance must be replaced prior to operating the appliance

The safety screen barrier ships with the fireplace. When you order (1) Part # GENLS-CCK Corner Conversion Kit you will receive (1) side safety screen barrier. You will use this on the side of the fireplace that you want view-able in a corner fireplace installation. You will order (2) Part # GENLS-CCK Corner Conversion Kit if you want a 3-Sided (Bay) Fireplace.

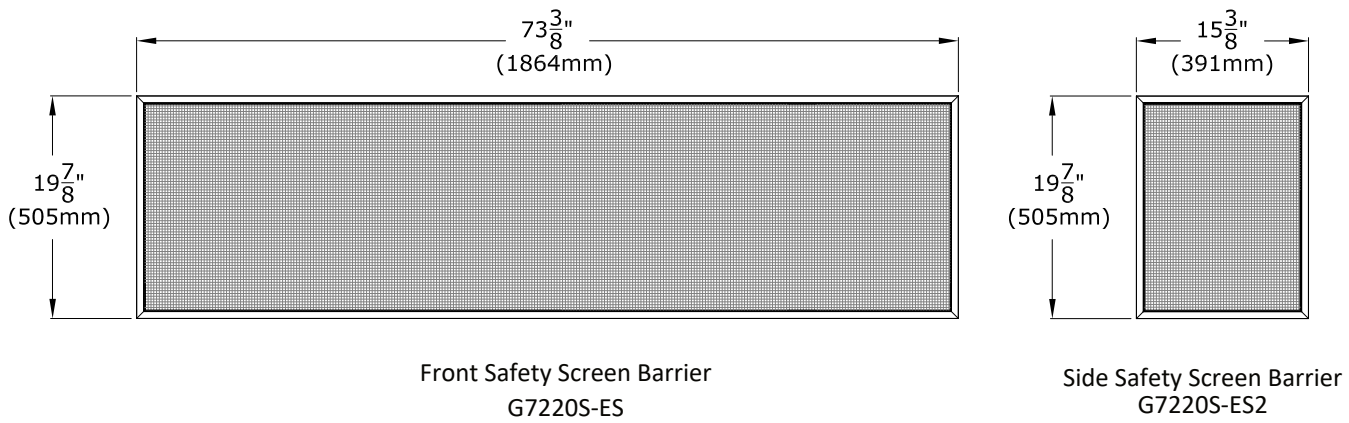

Figure 1.4 - Safety Screen Barrier Dimensions

1.3 Typical Corner Fireplace Installations

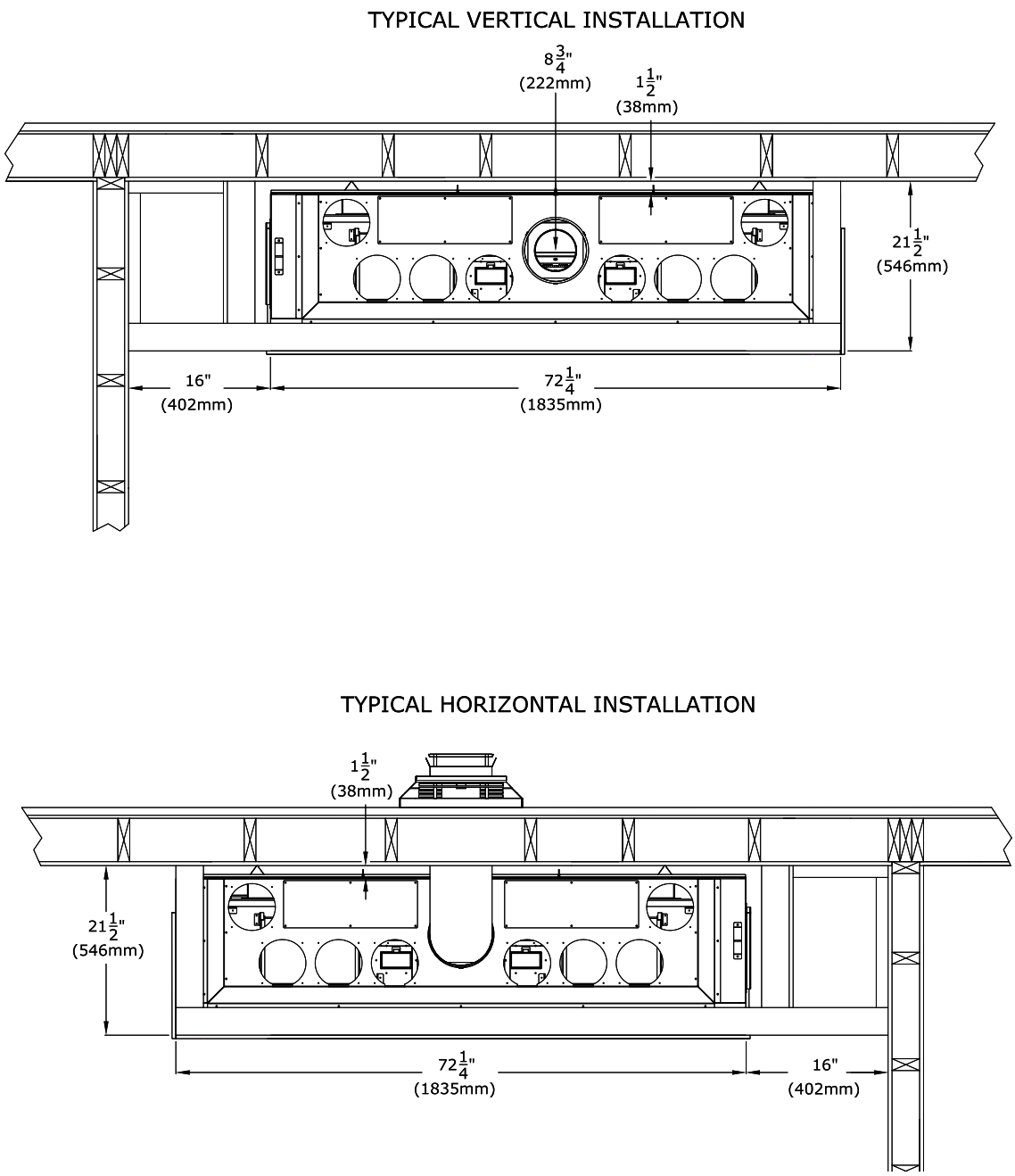

Figure 1.5 - Typical Corner Installations

1.4 Typical 3-Sided (Bay) Fireplace Installations

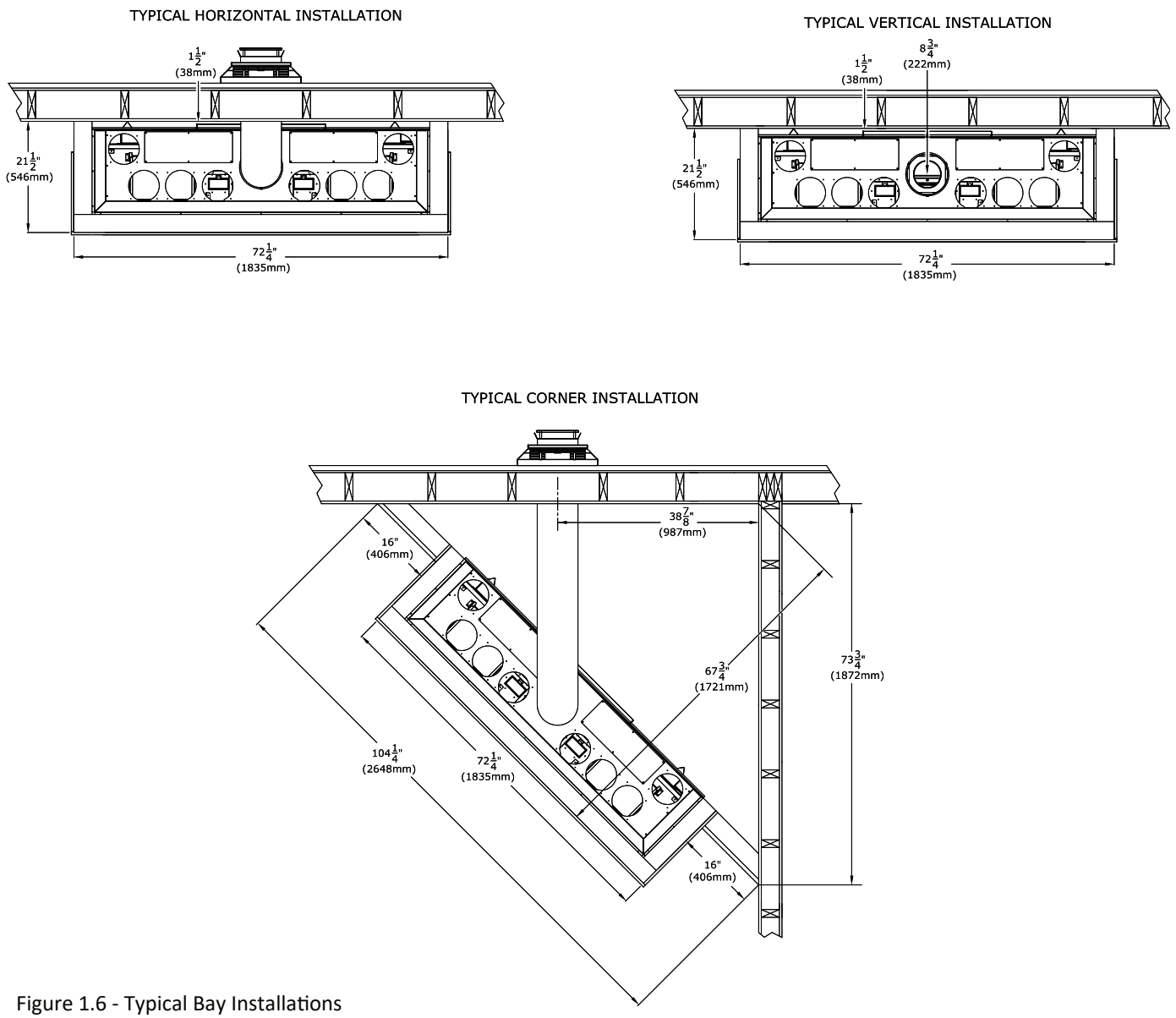

Figure 1.6 - Typical Bay Installations

1.5 Clearances to Combustibles

- See Table 1.1 below for minimum clearances.
- Unless otherwise noted all clearances / images in this manual are based off of nominal 2” x 4” framing being used.

Table 1.1 - Minimum Fireplace Clearances to Combustible Material		
Minimum height of fireplace enclosure	90”	2286mm
Base of fireplace to ceiling	90”	2286mm
From fireplace top stand-off brackets	0”	0mm
From fireplace back stand-off brackets	0”	0mm
From fireplace left or right stand-off brackets (nailing flanges) - Corner Installation Only	0”	0mm
From fireplace front	36”	914mm
Fireplace side finishing edge to adjacent sidewall	16”	406mm
Front and side 6” (152mm) mantel projection from the top finishing edge of the fireplace	2”	51mm
Unlimited hearth projection from the bottom finishing edge of the fireplace	0”	0mm
Minimum Vent System Clearances to Combustible Material Inside Fireplace Enclosure		
Horizontal venting within fireplace enclosure - Top surface of vent pipe	11-3/8”	289mm
Horizontal venting within fireplace enclosure - Left, right, and bottom surfaces of vent pipe	1”	25mm
Vertical venting within fireplace enclosure - All surfaces	1”	25mm

1.6 Mounting a Television Above a Fireplace and Television Recess Construction

***WARNING**: All clearances to venting must be maintained.*

- Mounting a television above a fireplace is a common practice. Mantel depth, ceiling heights, and wall and mantel construction material all affect television surface temperatures. Most television manufacturers specify in their instructions that a television should not be installed on, near, or above a heat source.
- We recommend the use of a mantel to deflect heat away from the television.
- Television location rests solely on the homeowner. It is the home owner's responsibility that the preferred TV mounting and mantel design will not exceed the listed maximum operation temperature of their electronic goods.
- The allowed TV recess of 4-1/4" (108mm) measures from the front of the nominal 2x4 framing to the backside of the finishing material of the pocket.

Nominal 2"x4" framing used in interior enclosure framing.

The framing above the fireplace must be self supporting.

The fireplace is NOT load-bearing.

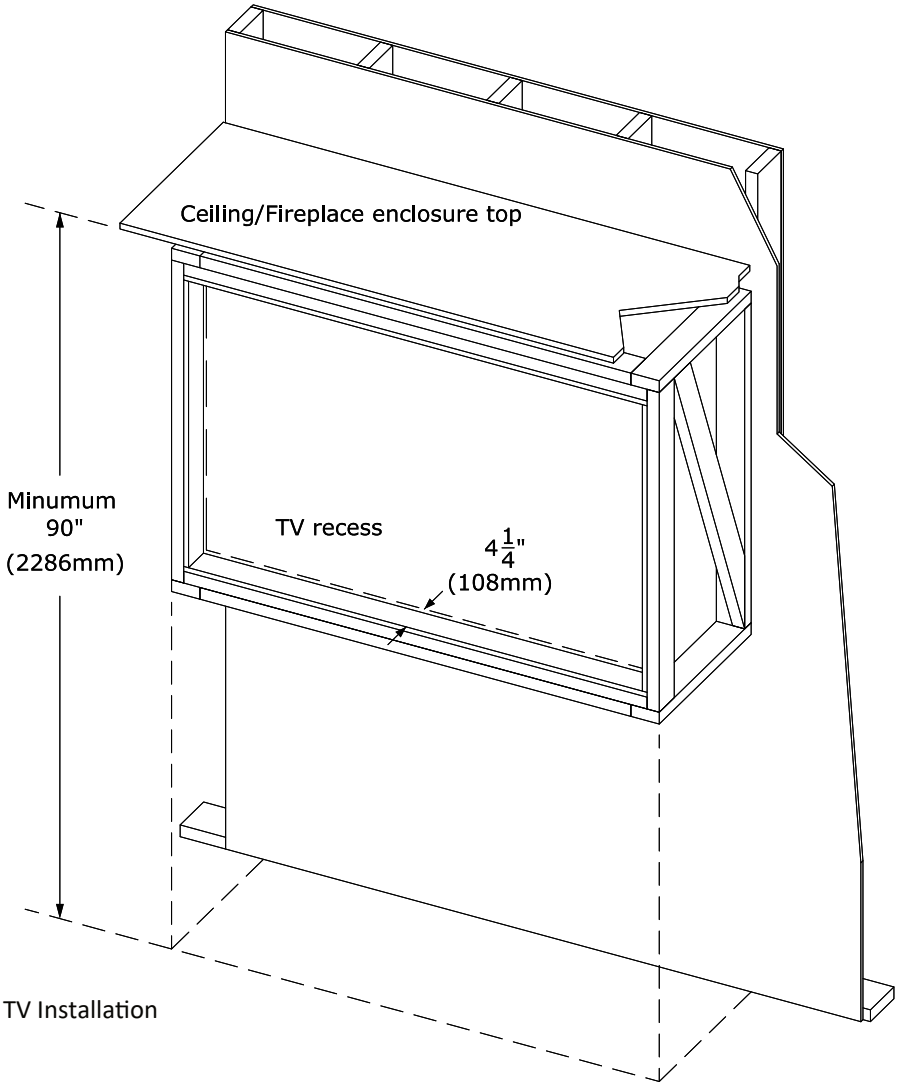

Figure 1.7 - Recess TV Installation

1.6.1 TV Recess with KZK

***WARNING**: All clearances to venting must be maintained.*

- Review all information in Section 1.6 regarding best practices and considerations involving recessing a TV.
- There is specific information about minimum clearances when performing a recessed TV and utilizing a side KZK (left image) or front KZK (right image). The drawing below highlights the minimum framed distance between the KZK framed opening and the framed opening of the TV recess cavity.
- Side KZK is only approved for 3-Sided (Bay) Installations.

Nominal 2”x4” framing used in interior enclosure framing.

The framing above the fireplace must be self supporting.

The fireplace is NOT load-bearing.

Side KZK Shown Below

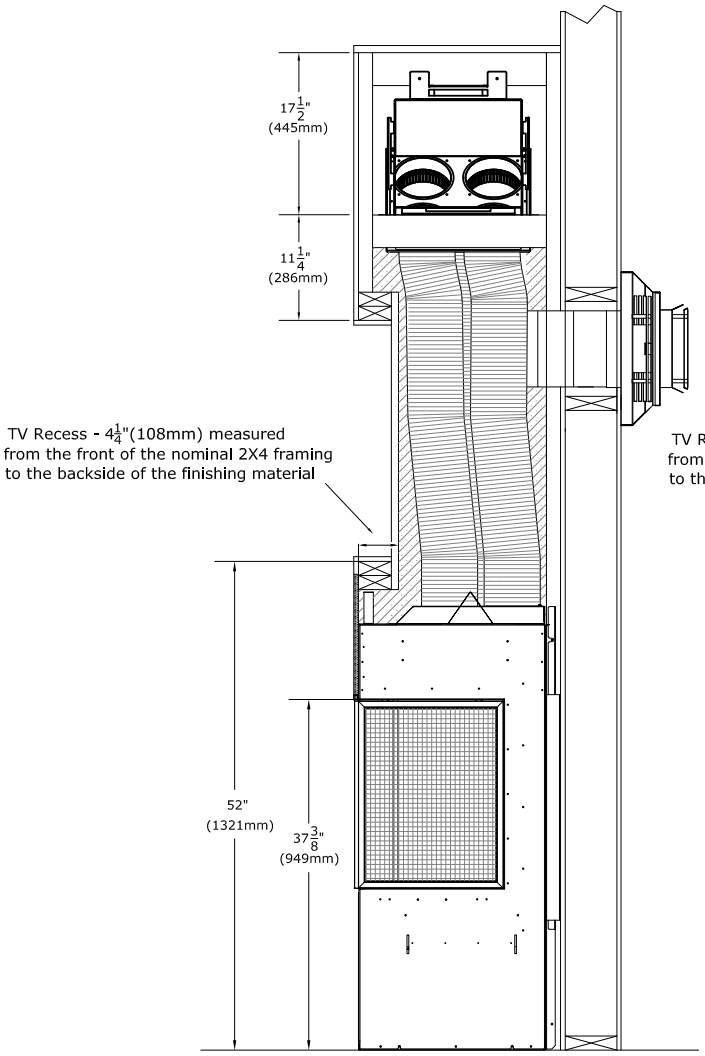

Front KZK Shown Below

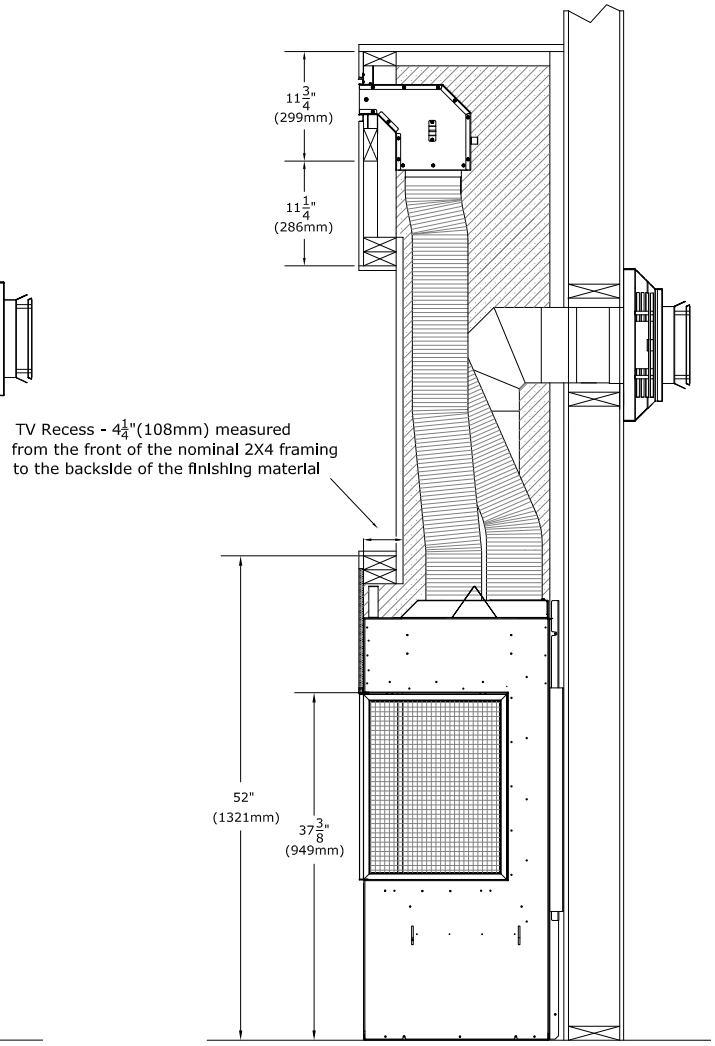

Figure 1.8 - Recess TV Installation

1.7 Clearance to Sprinkler

- In a situation where a sprinkler head is installed within the proximity to a #KZK discharge opening or the vented cavity opening for the fireplace chamber, the diagram below MUST be followed.
- The distance between a sprinkler head and discharge opening cannot be less than 60" (1524mm) in length at every point from the origin of the discharge opening. You must also verify the sprinkler head sensor is set to the proper heat setting so it does not activate when the room heats up from the fireplace being operated normally.
- Please follow local building codes to determine what temperature setting is relevant for your installation.
- Figure 1.9 shows a side KZK whereas your installation may look different.

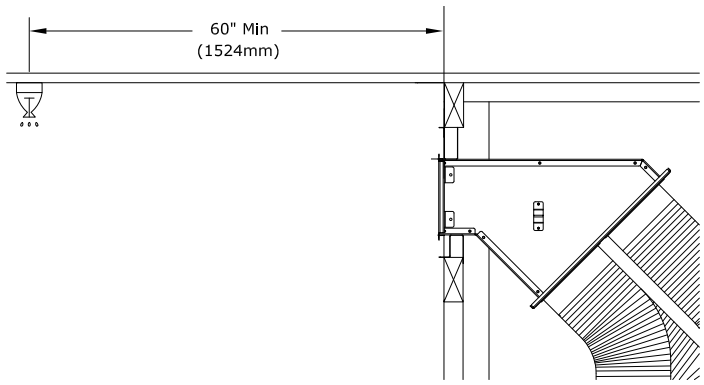

Figure 1.9 - Clearance to Sprinkler

1.8 Wall Thimble Framing Instructions - Minimum Horizontal

- Follow Figure 1.10 for minimum rough-in dimensions.

1. Measure from floor level of the fireplace to the center of where the vent pipe will penetrate the wall. The dimension in Figure 1.10 is used with a Simpson DuraVent vent pipe.
2. Cut and frame an opening in the wall to allow the vent system at least ¼” (6mm) rise for every 12” (305mm) of travel, up to the wall thimble.
3. Follow the vent pipe manufacturer’s installation instructions for natural draft vent installation.

Note: Vent pipe framing dimensions are tested with listed Simpson DuraVent pipe. Other manufacturers product dimensions may vary.

Minimum Wall Thimble clearance for 5” x 8” vent pipe is ½” (13mm).

Minimum Wall Thimble clearance for 4” x 6-5/8” vent pipe is 1” (25mm). The Kozy Power Vent is the only approved 4” x 6-5/8” horizontal termination.

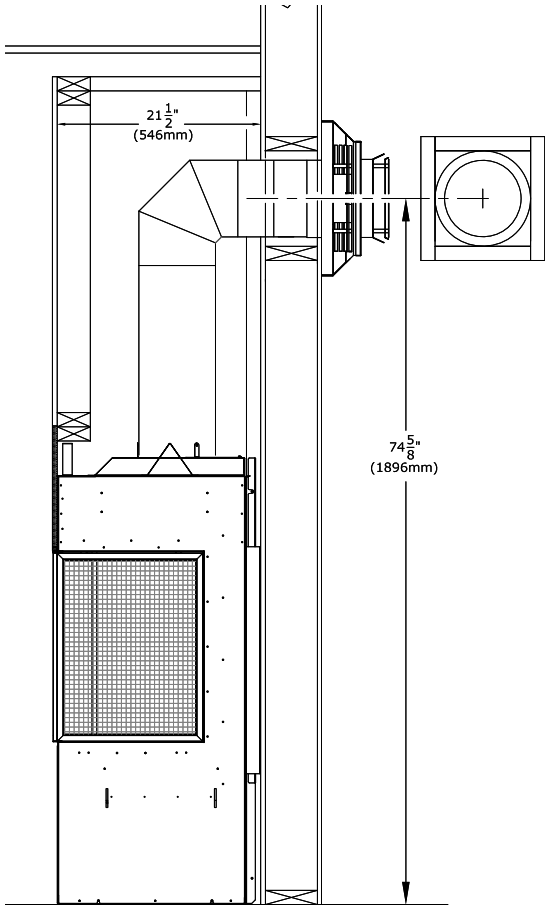

Figure 1.10 - Minimum Wall Thimble Framing

2.0 Corner Installation

The information provided in this section will cover topics related to installing this fireplace in its corner configuration (left or right). The topics include: framing, facing material, finishing material, cooling the fireplace chamber, and chamber clearances.

2.1 Framing

Note: Unless otherwise noted all clearances / images in this manual are based off of nominal 2” x 4” framing being used.

IMPORTANT: The framing above the fireplace must be self supporting in all installation scenarios. The fireplace is not load-bearing.

WARNING*: Provide adequate clearances around air openings into the combustion chamber. Provide adequate clearance in front of the fireplace for barrier removal, component access, gas line installation, service access, etc.*

CAUTION*: Cold air transfer area. The surround fireplace chase must comply with all clearances as outlined in this manual, and be constructed in compliance with local building codes. Outside walls should be insulated to prevent cold air from entering room.*

- Floor protection in front of the fireplace is not required. Combustible material may be used if installing a hearth extension. Consider the thickness of the hearth extension finishing material if building a fireplace platform. The hearth may be flush with the bottom finishing edge of the fireplace.
- The bottom of the fireplace must be placed directly on a wood or non-combustible surface (not linoleum or carpet). If this appliance is to be installed directly on carpeting, tile, or other combustible material other than wood flooring, this appliance shall be installed on a metal or wood panel extending the full width and depth of the appliance.

IMPORTANT: To cool the fireplace chamber correctly take important consideration when planning out the framing for this fireplace. Look at the different options on how to cool the chamber that are outlined in Section 2.3. You must choose one of the KZK (Komfort Zone Kit) or Vented Cavity options. The framing will have to accommodate one of these chamber cooling options.

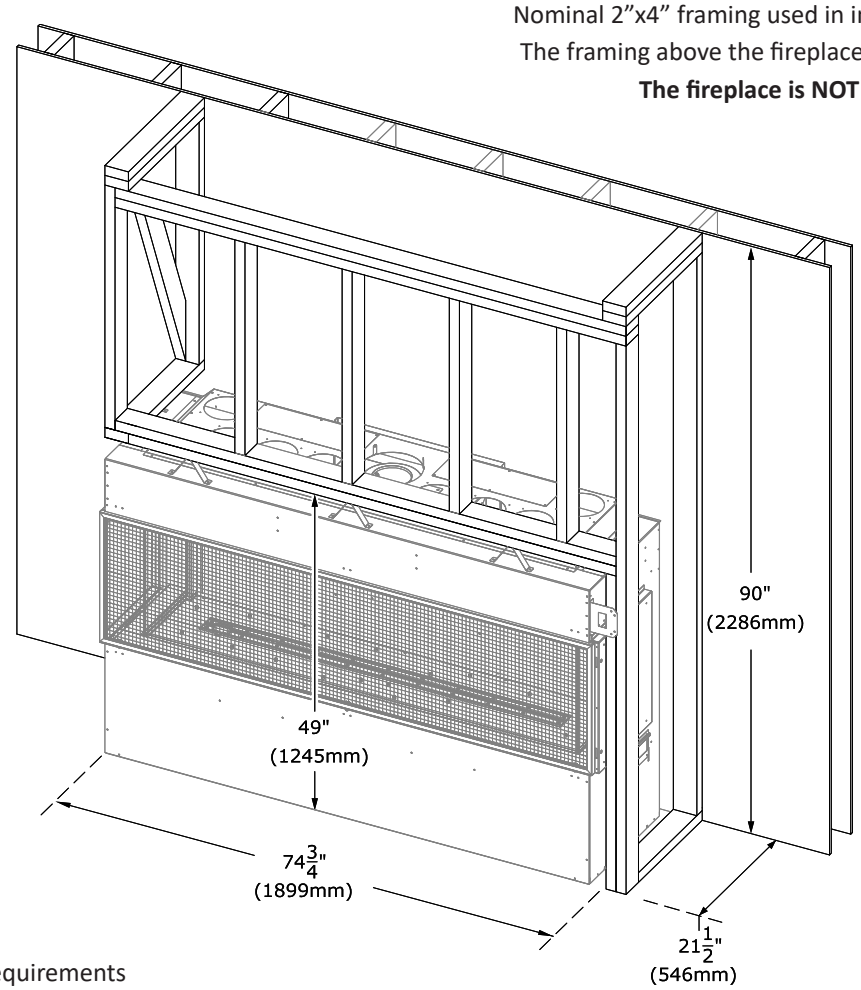

Figure 2.1 - Framing Requirements

2.2 Facing and Finishing Material Requirements

The information in this section shows the minimum non-combustible facing and finishing material requirements. These requirements apply for vented cavity or KZK installations. Figure 2.2 shows the minimum 13-1/4” (337mm) non-combustible facing and finishing material above the fireplace top finishing edge.

Take special consideration where you attach the facing and finishing material to the fireplace as there is a no-screw zone on this fireplace. Make sure the screws only penetrate up to 1/2” (13mm) into the allowed areas of the fireplace. Take consideration of this when choosing screw length based on your facing material thickness.

The image below shows the no screw zone for the facing and finishing material. There is a 1” zone below the bottom finishing edge.

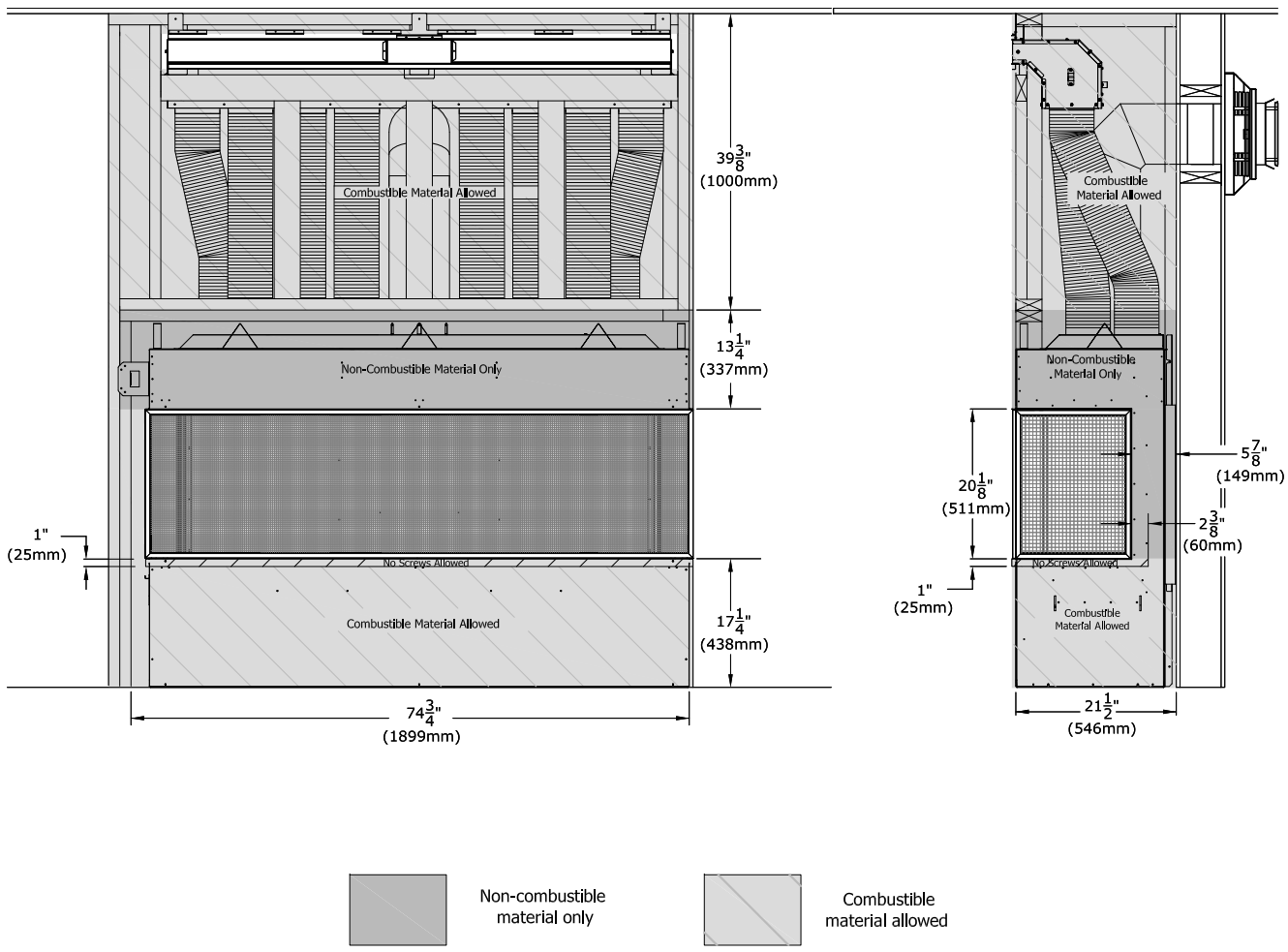

Figure 2.2 - Facing and Finishing Material Requirements

2.3 Requirements to Cool the Fireplace Chamber

IMPORTANT: This fireplace requires airflow to cool the fireplace chamber. Airflow comes into the fireplace through the safety screen and the hot air is discharged at an opening above the fireplace. You must select one of the vented cavity or KZK options to achieve this. This airflow is separate than the air that is used in the vent system and combustion process. Shown below is a visualization of the airflow.

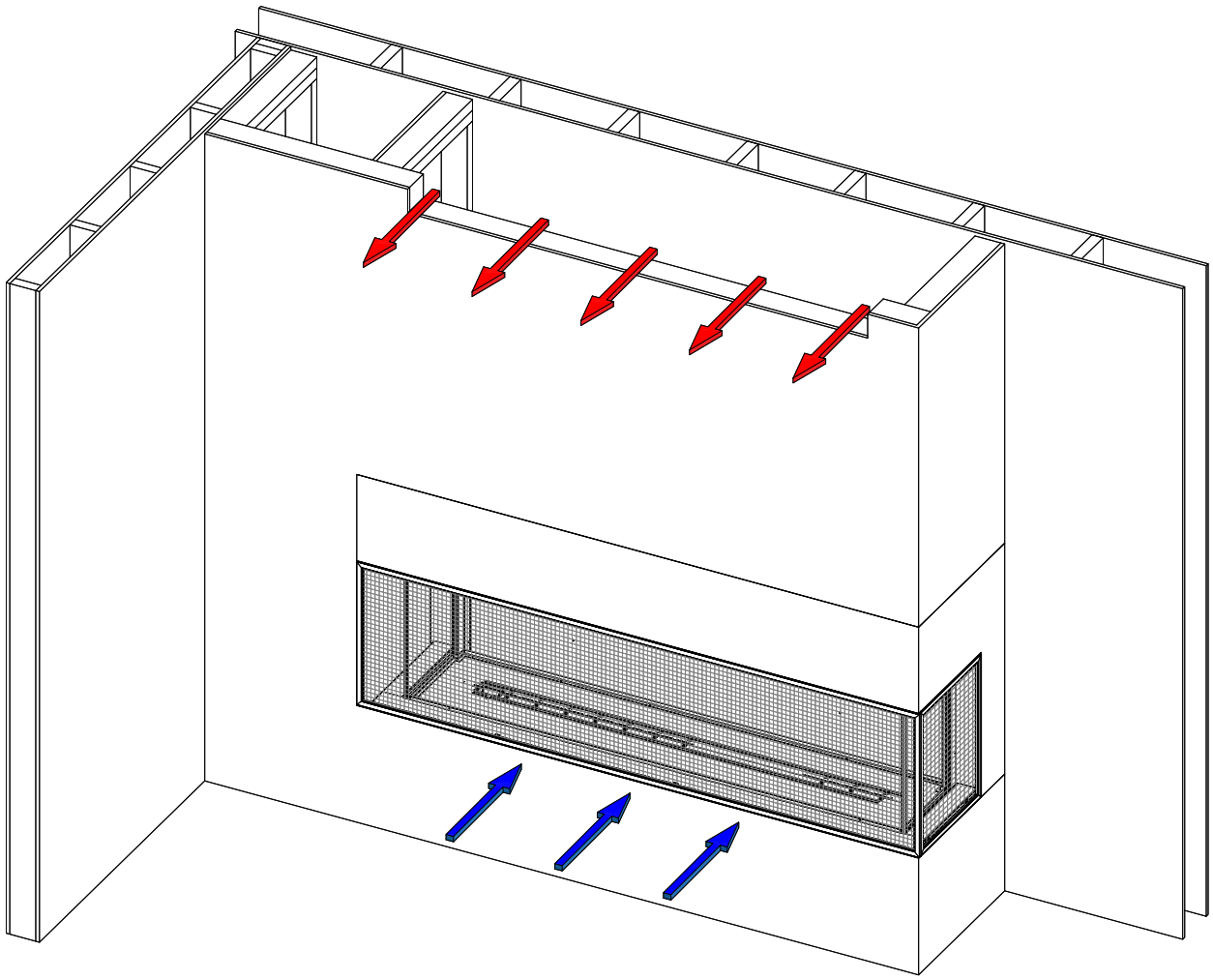

Figure 2.3 - Fireplace Chamber Airflow

2.3.1 KZK Installation Overview

Note: the KZK collars cannot be installed on the fireplace when sliding the fireplace into the framed opening. Install after installing into the framed opening.

1. Slide the fireplace into the framed opening. Ensure the two rectangle rear cover plates stay installed on the fireplace.
2. Use the (32) provided sheet metal screws to install the (8) KZK collars on the top of the fireplace.
3. Frame the rough opening of the KZK plenum(s). Refer to all pages of this manual to ensure all framing and finishing materials are considered.
4. Install the plenum(s) into the rough framed opening to maintain minimum clearances to combustibles. If you are installing the front KZK we recommend using the supplied plenum support brackets to help support the weight of the plenum and air duct pipes. Ensure the plenum(s) are level (All KZK Options) and their outlets are not distorted. Additional metal strapping may be needed to support the weight of the air duct pipes depending on the height of installation.
5. Attach the air duct pipes from all (8) plenum vent collars to all (8) fireplace vent collars. An upward slope must be maintained in horizontal section of air duct pipes for proper convection.
6. Install the KZK discharge trim or KZK grilles provided with the kit using the provided screws. If desired, the discharge trim or grilles may be painted using high temperature paint (250F or 121°C). Continue with fireplace installation.

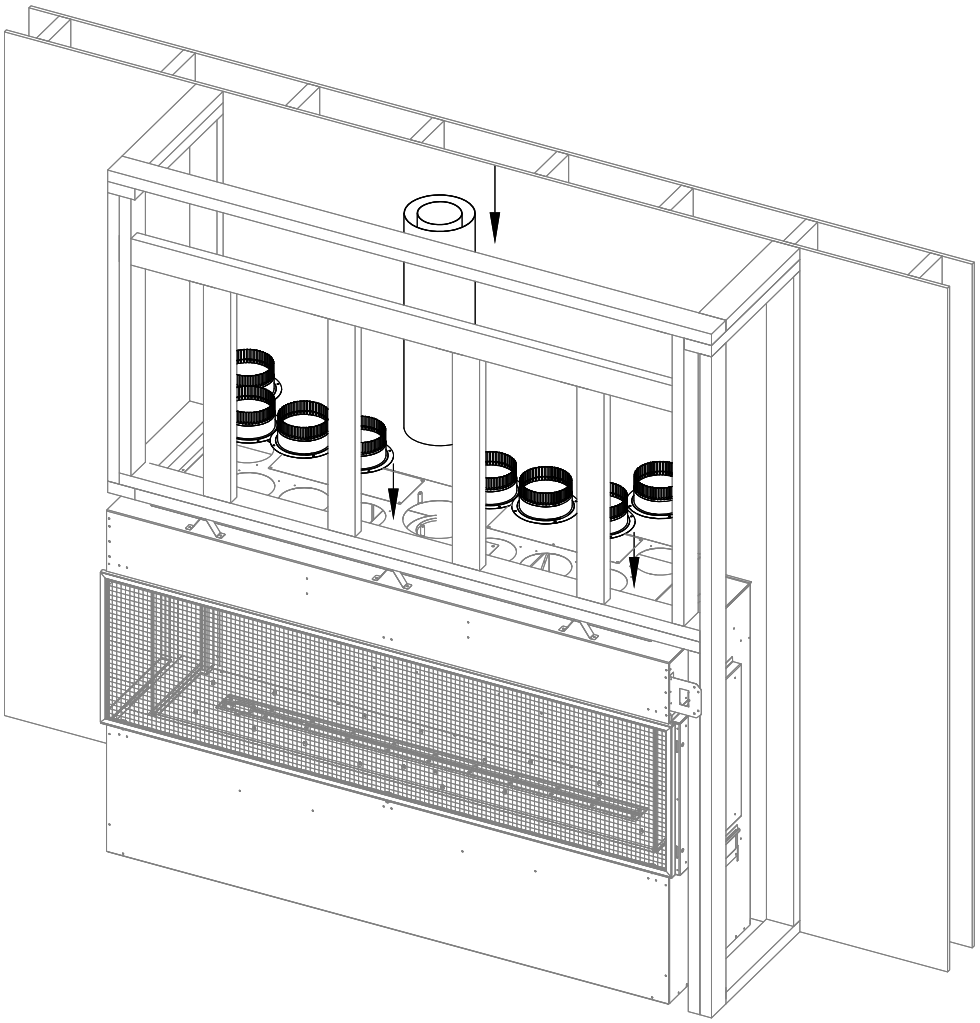

Figure 2.4 - KZK Collar Installation

2.3.2 Front KZK - Part # KZK-068

This section outlines the requirements for using the front KZK option to cool the fireplace chamber.

Kit Contents

ALL kit contents must be installed.

- (1) 68" plenum kit: KZK-068
- (1) plenum discharge trim: KZK-068DT
- (2) plenum support brackets
- (16) 6" collars - (8) attach to the bottom of the plenum; (8) attach to the top of the fireplace.

Additional Required Items

- (2) KZK-410-6 kits (sold separately) are used for a vent run up to 10' (3m). If you are mounting the plenum above the fireplace 10' (3m) or less, use (2) KZK-410-6 kits.

Optional Items

If you are mounting the plenum above the fireplace between 10' (3m) to 20' (6.1m), you will need a total of (4) KZK-410-6 kits and (2) #KZK-CPL6 coupler kits. The (2) KZK-CPL6 coupler kits (sold separately) include the 6" couplers that connect (4) KZK-410-6 kits together.

Plenum Placement

- ***IMPORTANT**: The air duct pipe cannot run horizontally without a vertical rise.*
- ***IMPORTANT**: The 1/2" (13mm) clearance around the air duct pipes must be maintained.*
- Use (2) #KZK-410-6 (or UL181 Class 0 Air Duct piping) to connect the plenum to the unit.
- Hussong Mfg. Co., Inc. requires air duct pipes to be listed as UL181 Class 0 Air Duct to connect the plenum to the unit.
- Maximum Vent Run: 20' (6.10m)

(8) - 10' x 6" (aluminum flex) listed to UL-181 Class 0 Air Duct (sold separately)

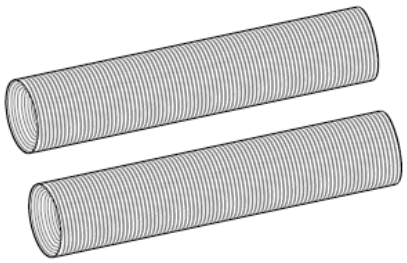

Figure 2.5 - #KZK-410-6 - QTY of 2 kits

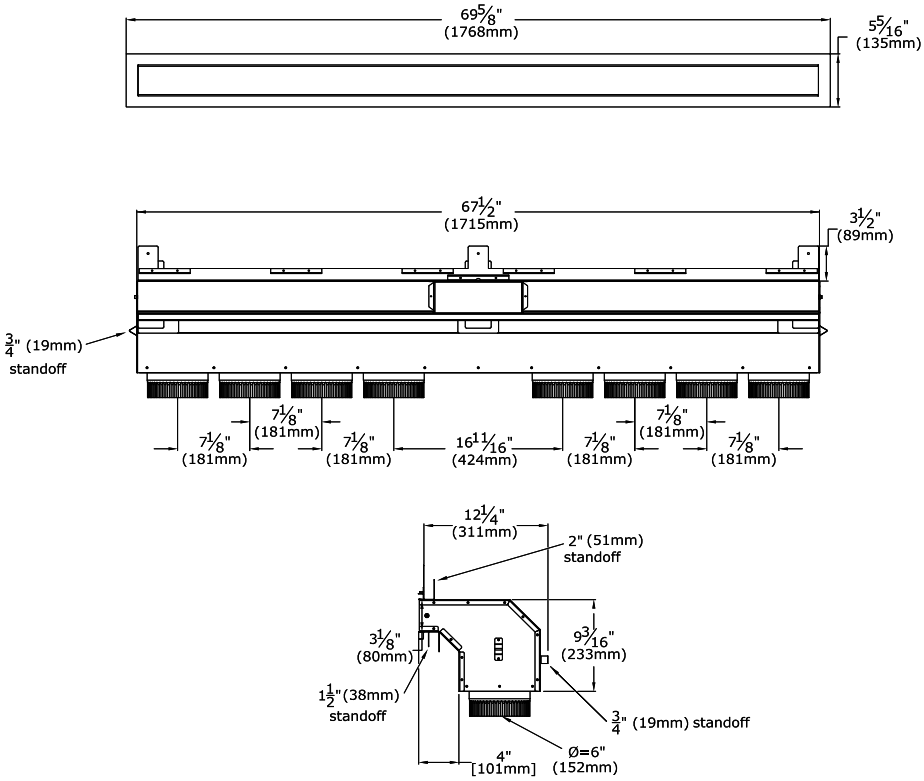

Figure 2.6 - KZK-068 Overview

2.3.2 Front KZK (continued)

Below is the framing information for the front KZK. Figure 2.7 shows the framed opening for the KZK plenum. Figure 2.8 shows the framing information.

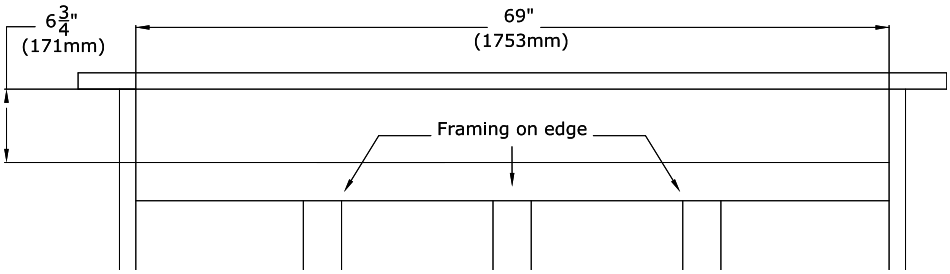

Figure 2.7 - Front KZK - Plenum Framed Opening

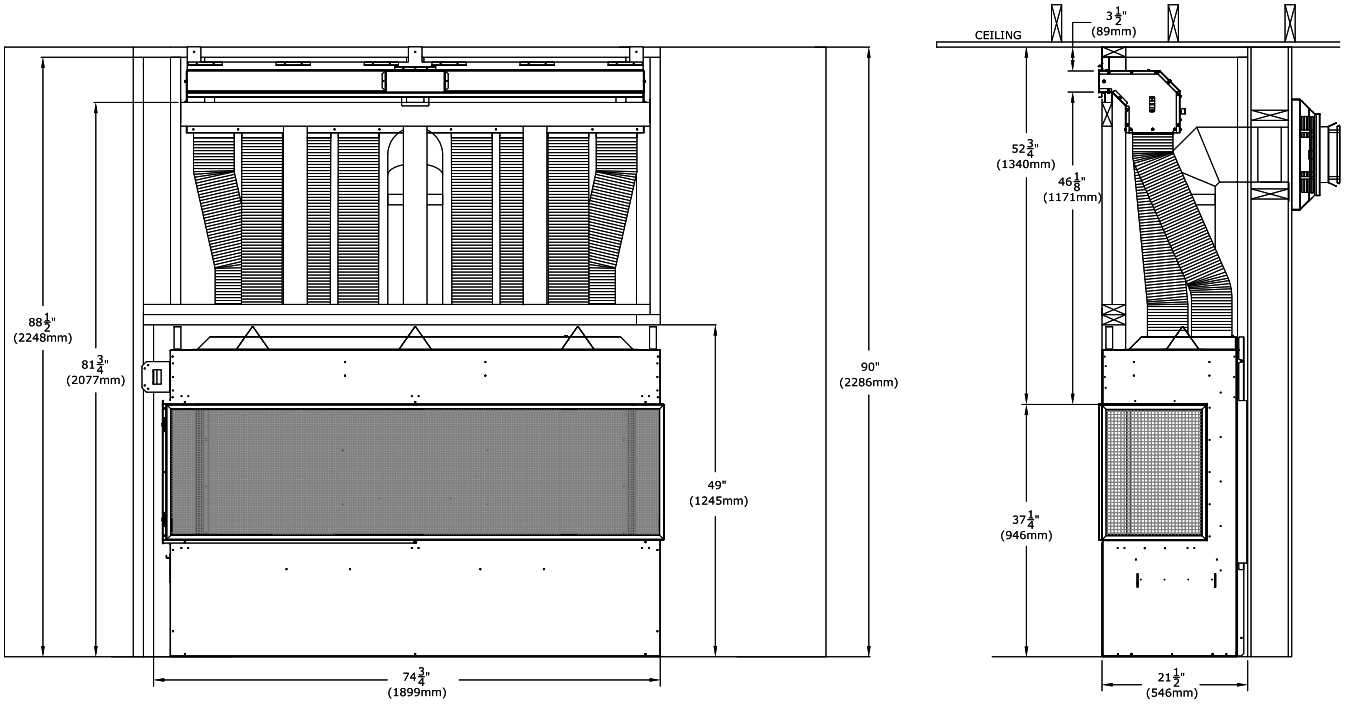

Figure 2.8 - Minimum Chamber Height Plenum Framing

2.3.2 Front KZK (continued)

Shown below in Figure 2.9 are options on how you can finish around the front KZK plenum opening.

- The left image shows combustible facing material such as drywall finished up to the standoffs around the opening of the plenum. Install the KZK discharge trim to cover the edge of the finishing material.
- The right image shows non-combustible finishing material such as tile that is finished up to the opening of the plenum.

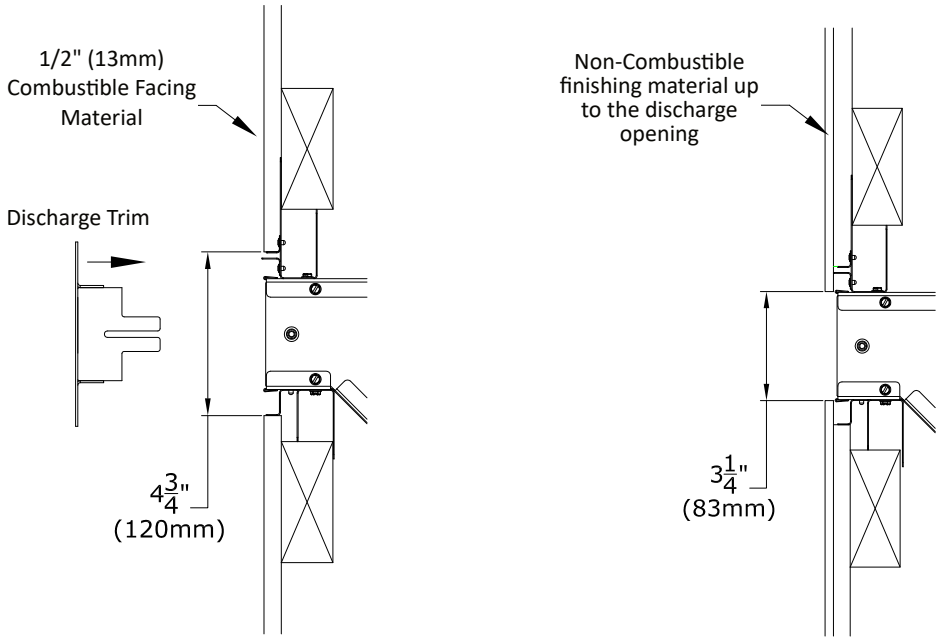

Figure 2.9 - KZK Plenum Air Discharge Opening - Finishing Options

2.3.3 Vented Cavity Installation Overview

1. The fireplace ships ready for the vented cavity installation scenario shown in Section 2.3.4. Leave the rectangle cover plates installed on the fireplace, as shown in Figure 2.10.
2. Slide the fireplace into the framed opening.
3. Frame the rough opening of the vented cavity option you have chosen to maintain minimum clearances to combustibles.

Corner Installation (Left or Right Corner) - Cover plates must stay installed on the fireplace for vented cavity installations shown in Section 2.3.4.

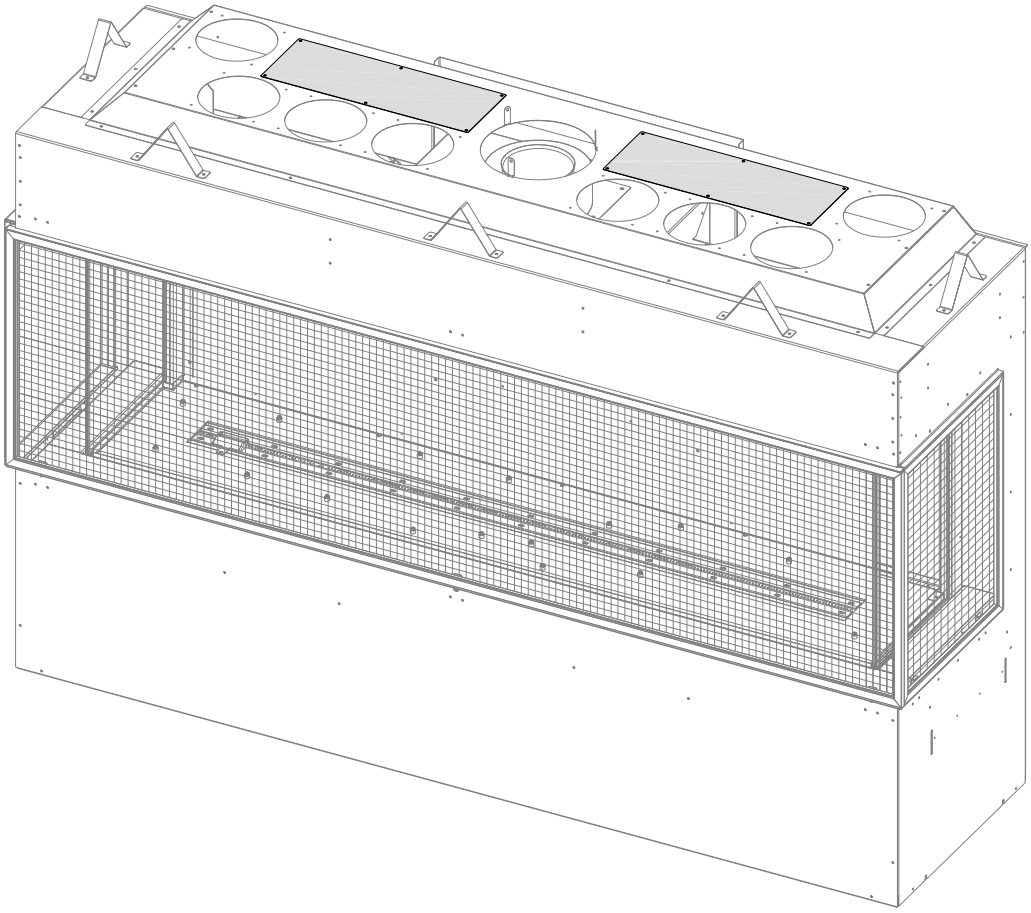

Figure 2.10 - Vented Cavity Cover Plate Location

2.3.4 Vented Cavity Openings - Front Of The Chamber

Shown below are the minimum requirements for the heat release opening where the opening is on the front of the chamber only.

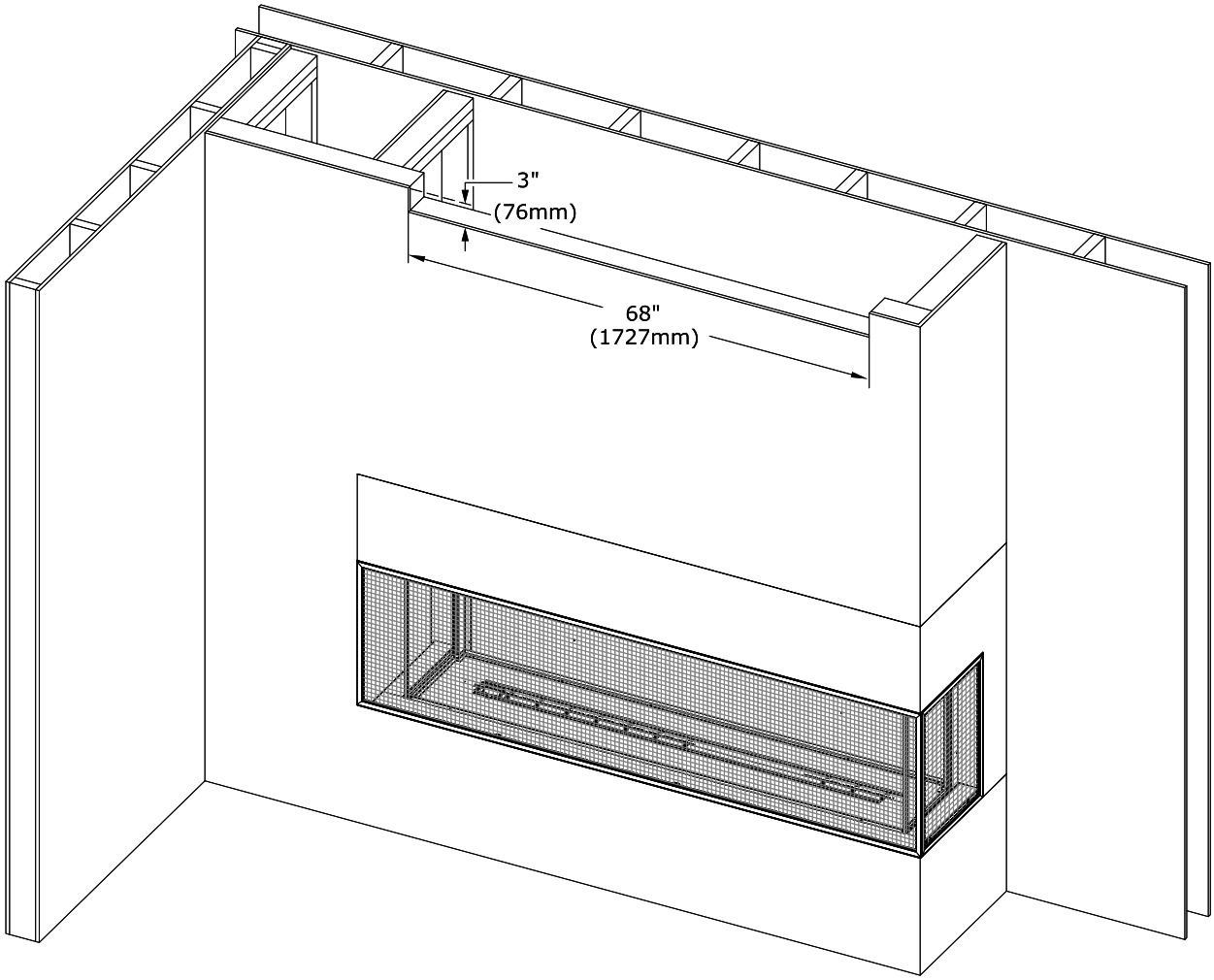

Figure 2.11 - Air Opening - Front Facing Vented Cavity

2.3.4 Vented Cavity Openings - Front Of The Chamber (continued)

The figures on this page show how you can visually conceal the heat release opening. This may provide a more desirable appearance. Figure 2.12 shows the use of crown molding. Figure 2.13 shows an overhang.

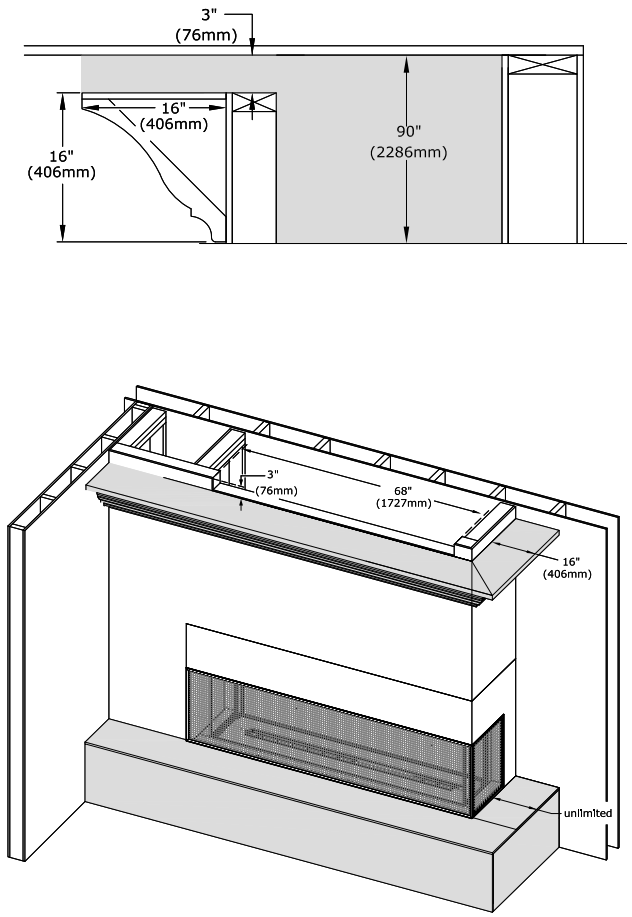

Figure 2.12 - Crown Molding - Front Facing Vented Cavity

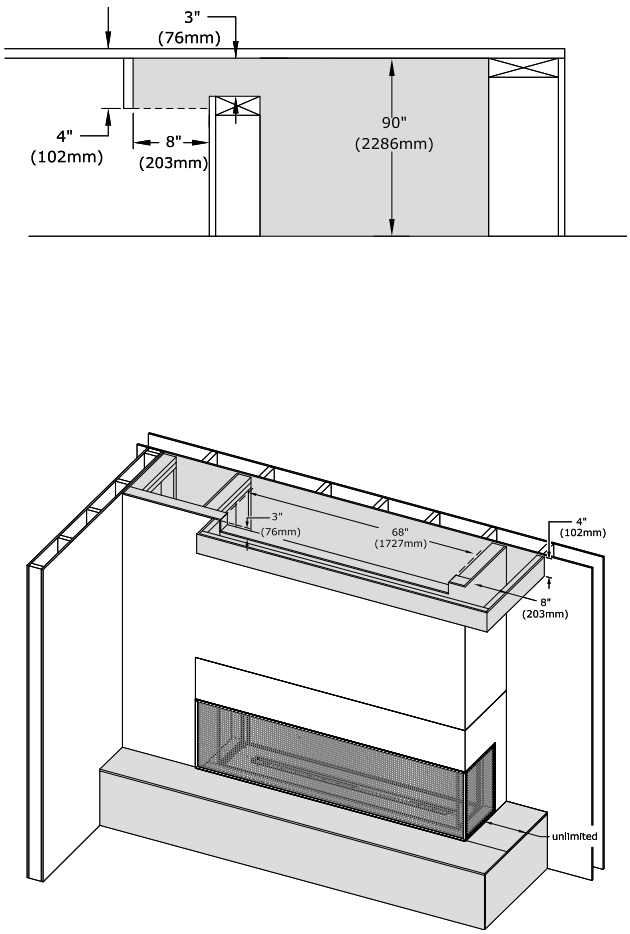

Figure 2.13 - Overhang - Front Facing Vented Cavity

2.4 Hearth, Mantel, Front Chamber Projection, and Side Chamber Projection for KZK Options

NOTE: A maximum of 16” (406mm) total projection is allowed between the mantel and chamber projection (regardless if it is combustible, non-combustible, or a combination). An example would be if you installed a 10” (254mm) front non-combustible chamber projection then you would be allowed up to a 6” (152mm) mantel until you hit the limit of 16” (406mm).

2.4.1 Combustible Hearth and Mantel Requirements

WARNING: All minimum clearances to combustible material MUST be maintained.

- **Combustible Mantel Projections:** A maximum of a 6" (152mm) mantel can be installed at 2” (51mm) above the side and top finishing edge. Mantel projections can increase 1” (25mm) of depth for every 1” of height starting at the 6” (152mm) mantel. See Figure 2.14.
- **Combustible Chamber Projections**: Not allowed.
- **Combustible Mantel Leg:** A mantel leg can be installed at 0” (0mm) to the fireplace side finishing edge.
- **Combustible Hearth**: Combustible hearth can have an unlimited projection. Hearth can be raised flush to the bottom finishing edge. See Figure 2.14.

2.4.2 Non-combustible Mantel and Chamber Projection Requirements

- **Non-combustible Mantel Projections**: A maximum of a 16” (406mm) non-combustible mantel projection is allowed to start at 0” (0mm) front and side top finishing edges of the fireplace. See Figure 2.16.
- **Non-combustible Chamber Projection:** A maximum of a 16” (406mm) non-combustible chamber projection can be installed flush at the front and side top finishing edges of the fireplace. See Figure 2.16.

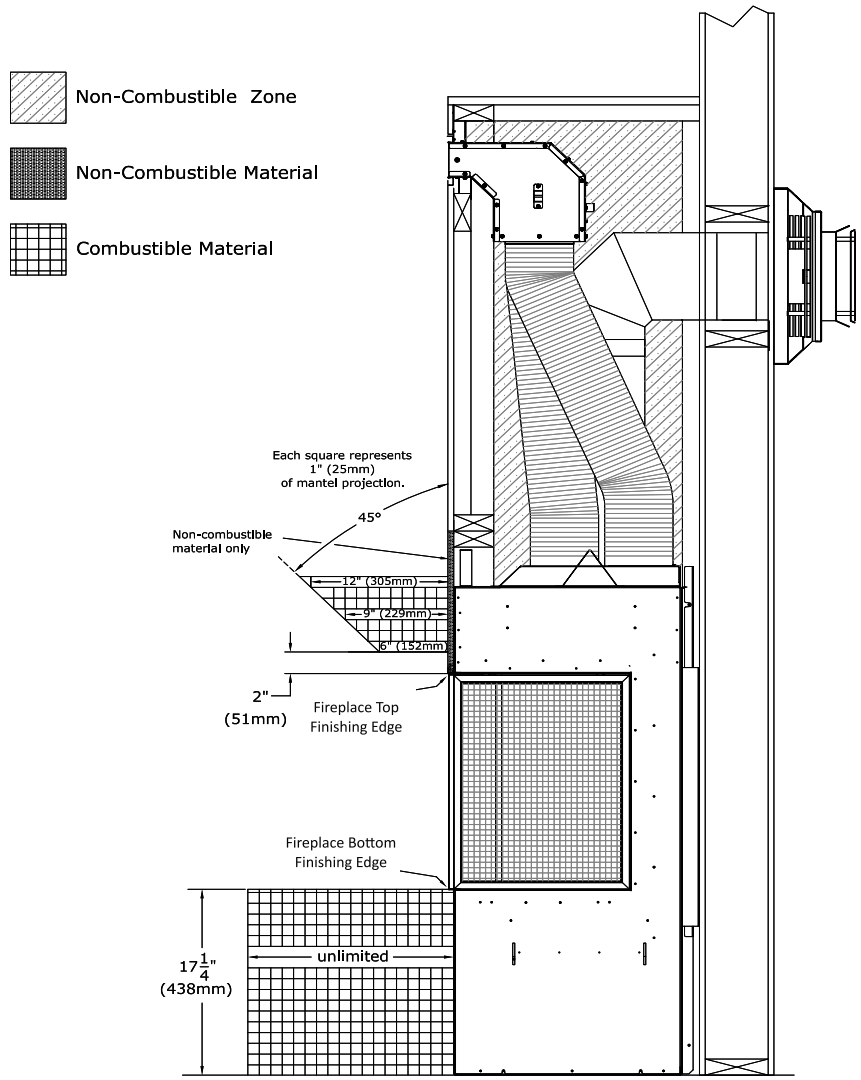

Figure 2.14 - Mantel and Hearth Projection

2.4 Hearth, Mantel, Front Chamber Projection, and Side Chamber Projection for KZK Options (continued)

Figure 2.15 shows the KZK installed in a 16” non-combustible front chamber projection. The 16” non-combustible projection would also apply to any side chamber projection.

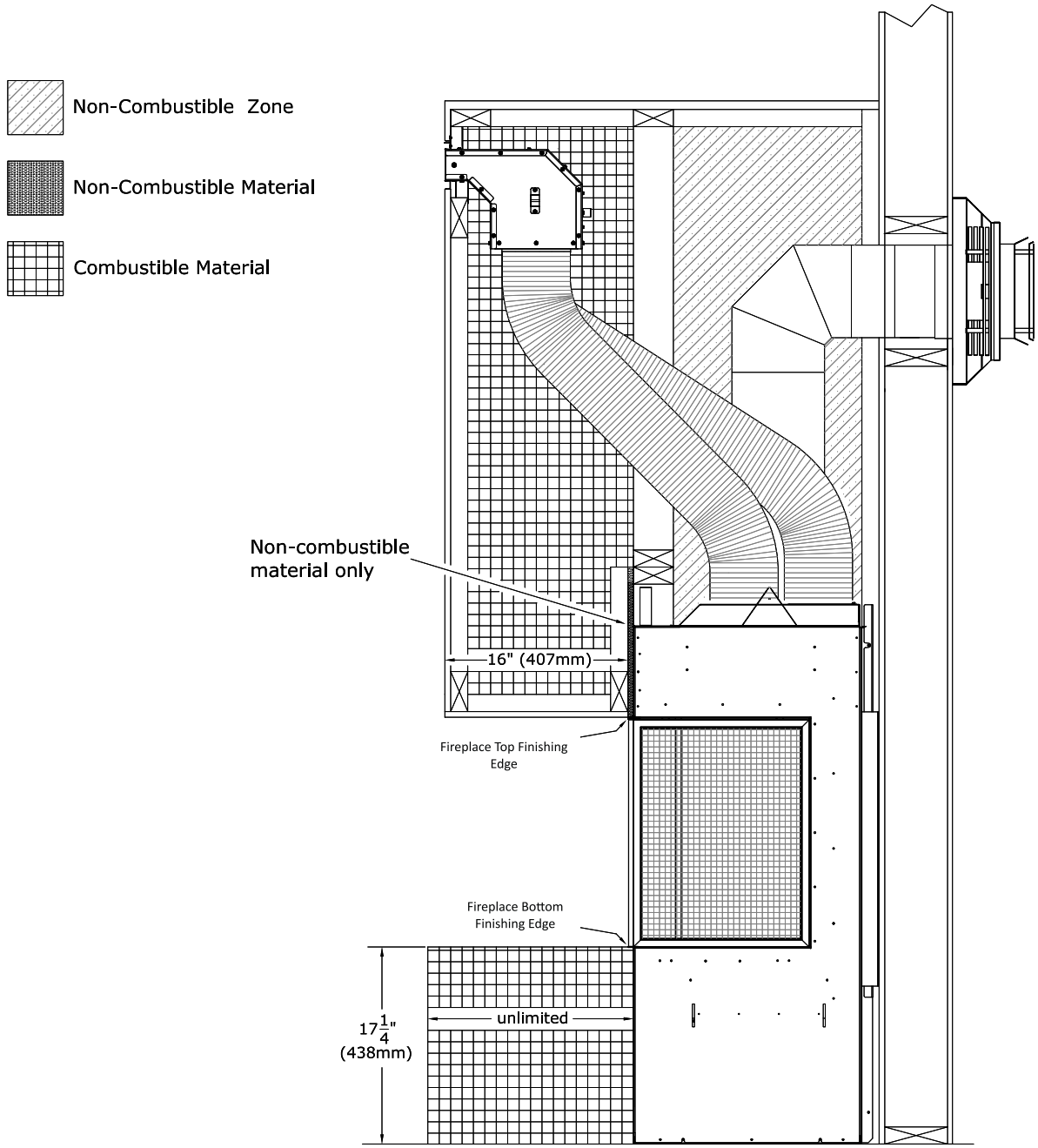

Figure 2.15 - Front Chamber Projection and Hearth Projection

2.4 Hearth, Mantel, Front Chamber Projection, and Side Chamber Projection for KZK Options (continued)

The image below shows the non-combustible material requirements for front and side projection (up to the allowed 16”) with an unlimited combustible hearth.

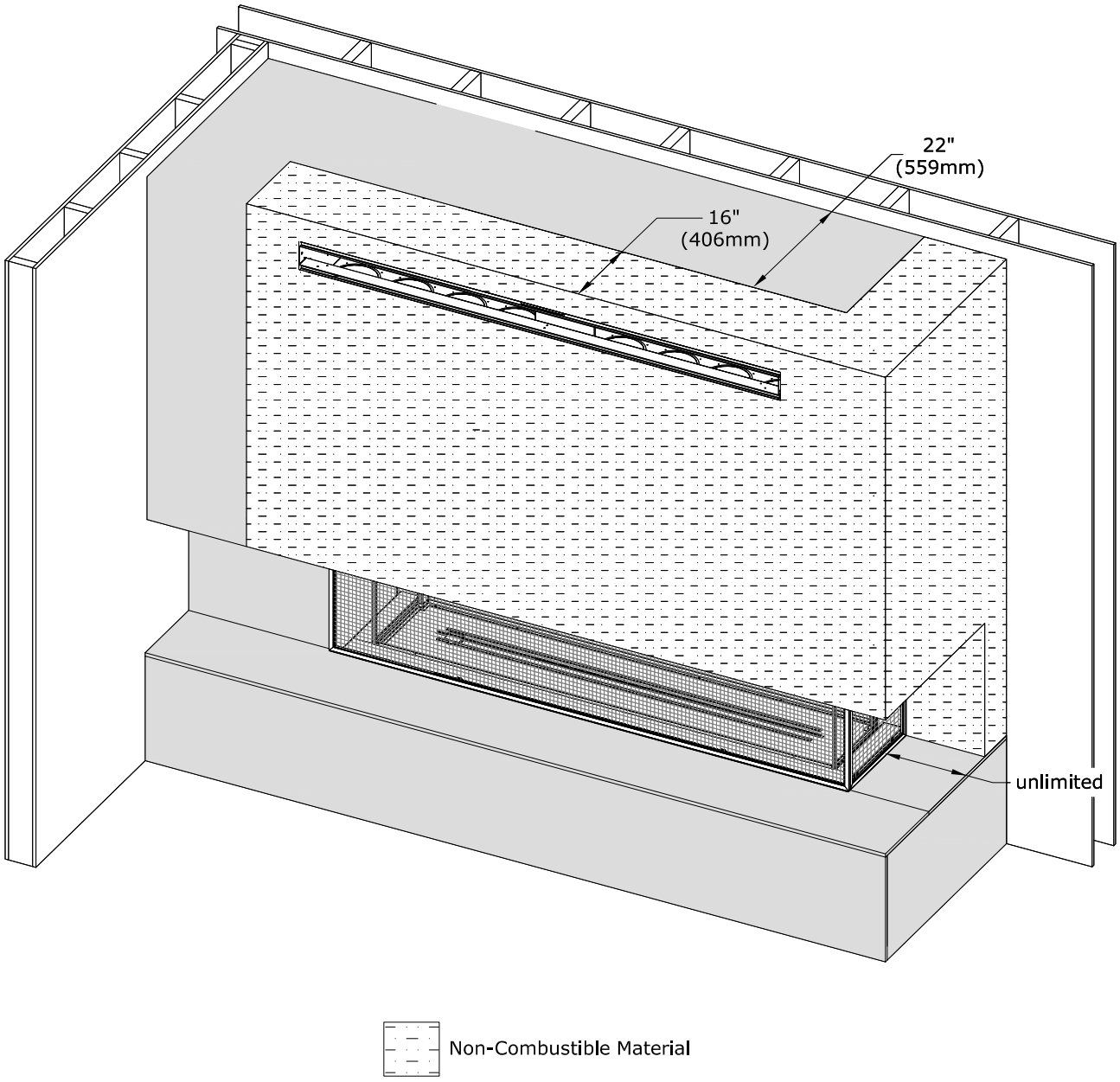

Figure 2.16 - Front and Side Chamber Projection

2.4.3 How to Construct a Chamber Projection with a KZK

This section is an overview of the steps in constructing a chamber projection when using a KZK-068. The fireplace chamber does NOT need to be sealed separately from the front projection. This is because the air will heat up and rise through the KZK tubes and exit through the KZK plenum(s).

- Frame out the chamber above the fireplace (top left image) This can be combustible framing.
- Next frame out the projection using non-combustible framing and install the KZK (top right image).
- The non-combustible facing and finishing material is required for the chamber projection (bottom image).

IMPORTANT: Maintain 1/2” (13mm) clearance around the KZK air duct pipes to anything combustible.

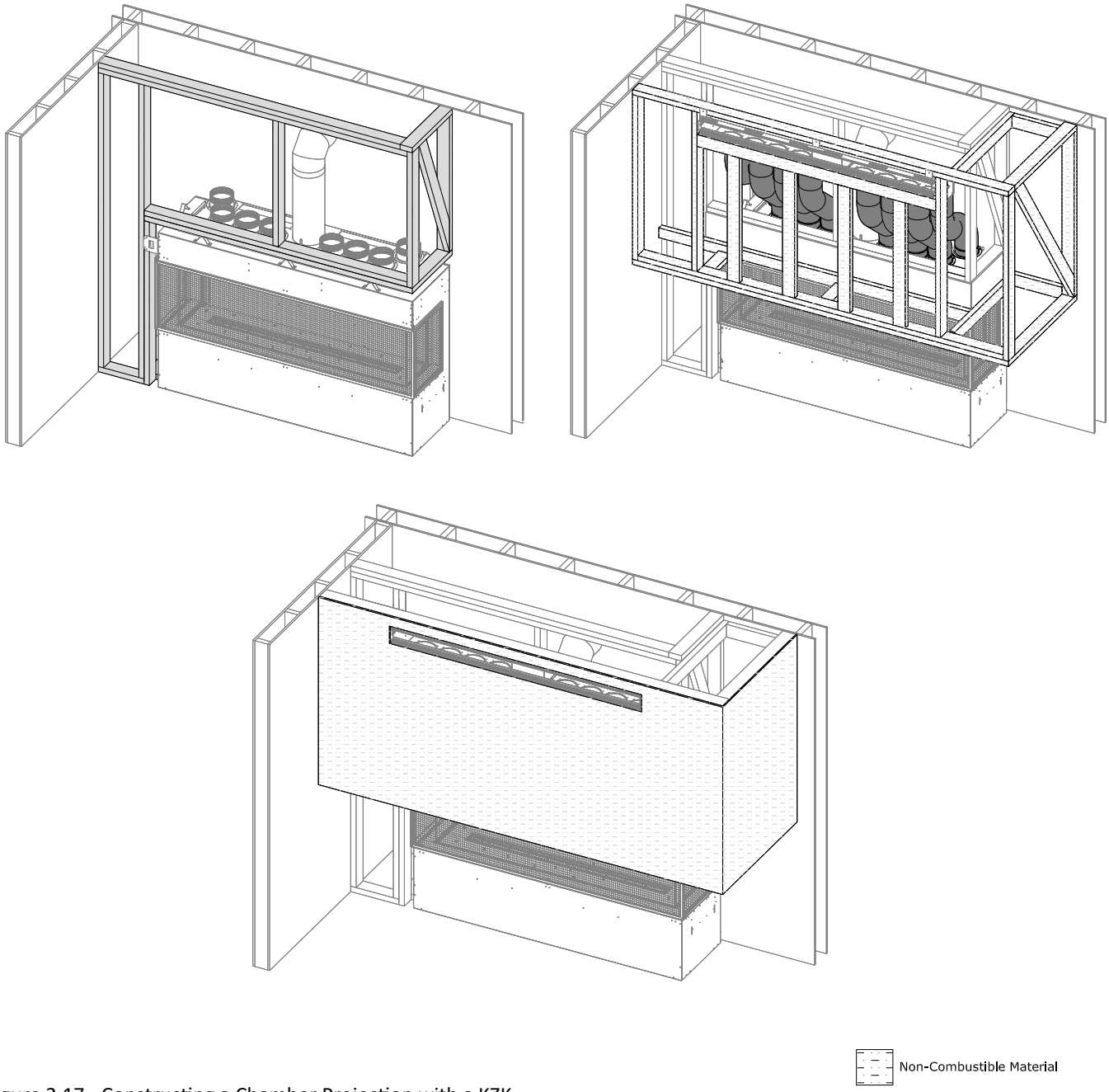

Figure 2.17 - Constructing a Chamber Projection with a KZK

2.5 Hearth, Mantel, Front Chamber, and Side Chamber Projection for Vented Cavity Options

NOTE: A maximum of 16” (406mm) total projection is allowed between the mantel and chamber projection (regardless if it is combustible, non-combustible, or a combination). An example would be if you installed a 10” (254mm) front non-combustible chamber projection then you would be allowed up to a 6” (152mm) mantel until you hit the limit of 16” (406mm).

2.5.1 Combustible Hearth and Mantel Requirements

WARNING: All minimum clearances to combustible material MUST be maintained.

- **Combustible Mantel Projections:** A maximum of a 6" (152mm) mantel can be installed at 2” (51mm) above the side and top finishing edge. Mantel projections can increase 1” (25mm) of depth for every 1” of height starting at the 6” (152mm) mantel. See Figure 2.18.
- **Combustible Chamber Projections**: Not allowed.
- **Combustible Hearth**: Combustible hearth can have an unlimited projection. Hearth can be raised flush to the bottom finishing edge. See Figure 2.18.

2.5.2 Non-combustible Mantel and Chamber Projection Requirements

- **Non-combustible Mantel Projections**: A maximum of a 16” (406mm) non-combustible mantel projection is allowed to start at 0” (0mm) front and side top finishing edges of the fireplace. See Figure 2.20.
- **Non-combustible Chamber Projection:** A maximum of a 16” (406mm) non-combustible chamber projection can be installed flush at the front and side top finishing edges of the fireplace. See Figure 2.20.

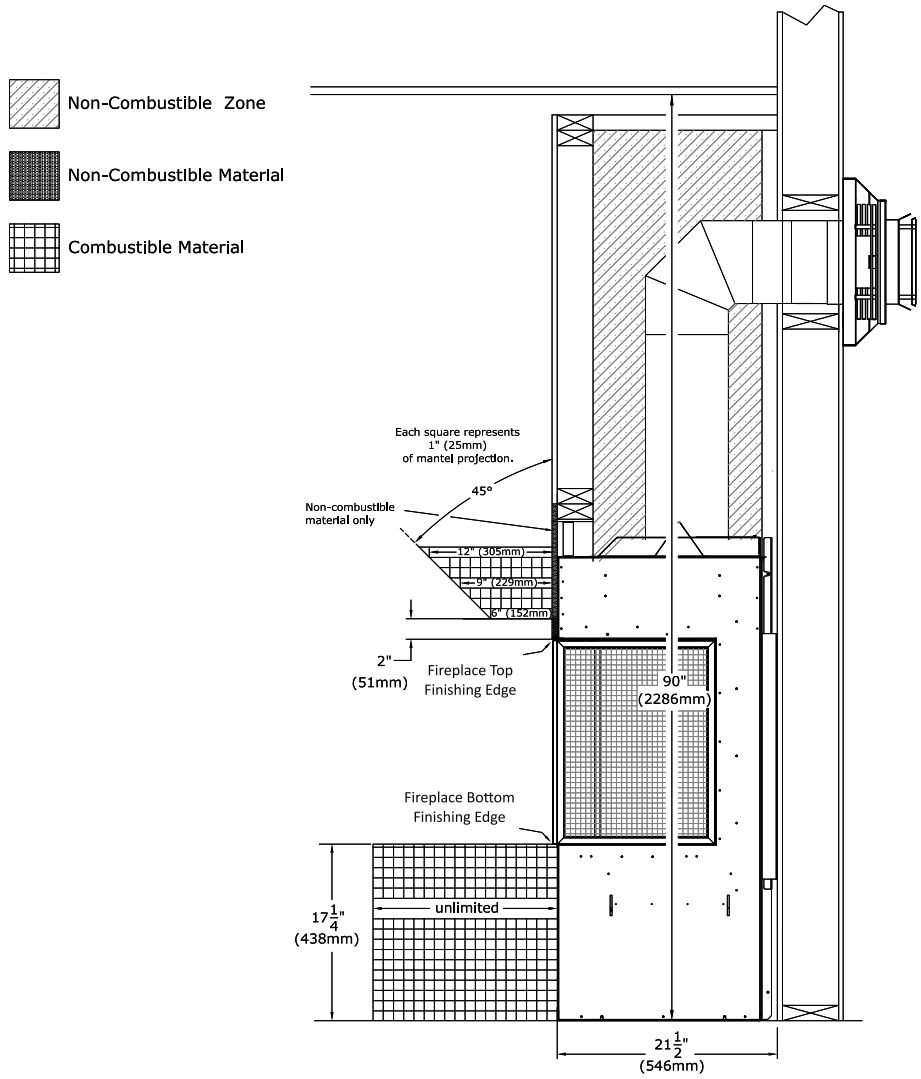

Figure 2.18 - Mantel and Hearth Projection

2.5 Hearth, Mantel, Front Chamber, and Side Chamber Projection for Vented Cavity Options (continued)

Figure 2.19 shows a non-combustible 16” (406mm) front chamber projection with a vented cavity. The heat release opening at the top of the fireplace chamber must maintain their opening dimensions for the option you have chosen throughout the entire fireplace chamber and projection. The non-combustible 16” (406mm) projection applies to a side chamber projection as well.

IMPORTANT: It is required to install facing material on the fireplace chamber before constructing the chamber projection. This is required to ensure the convective cooling process of the fireplace functions correctly. See Section 2.5.3 on how to construct the chamber projection. See Section 2.2 for minimum noncombustible facing material requirements.

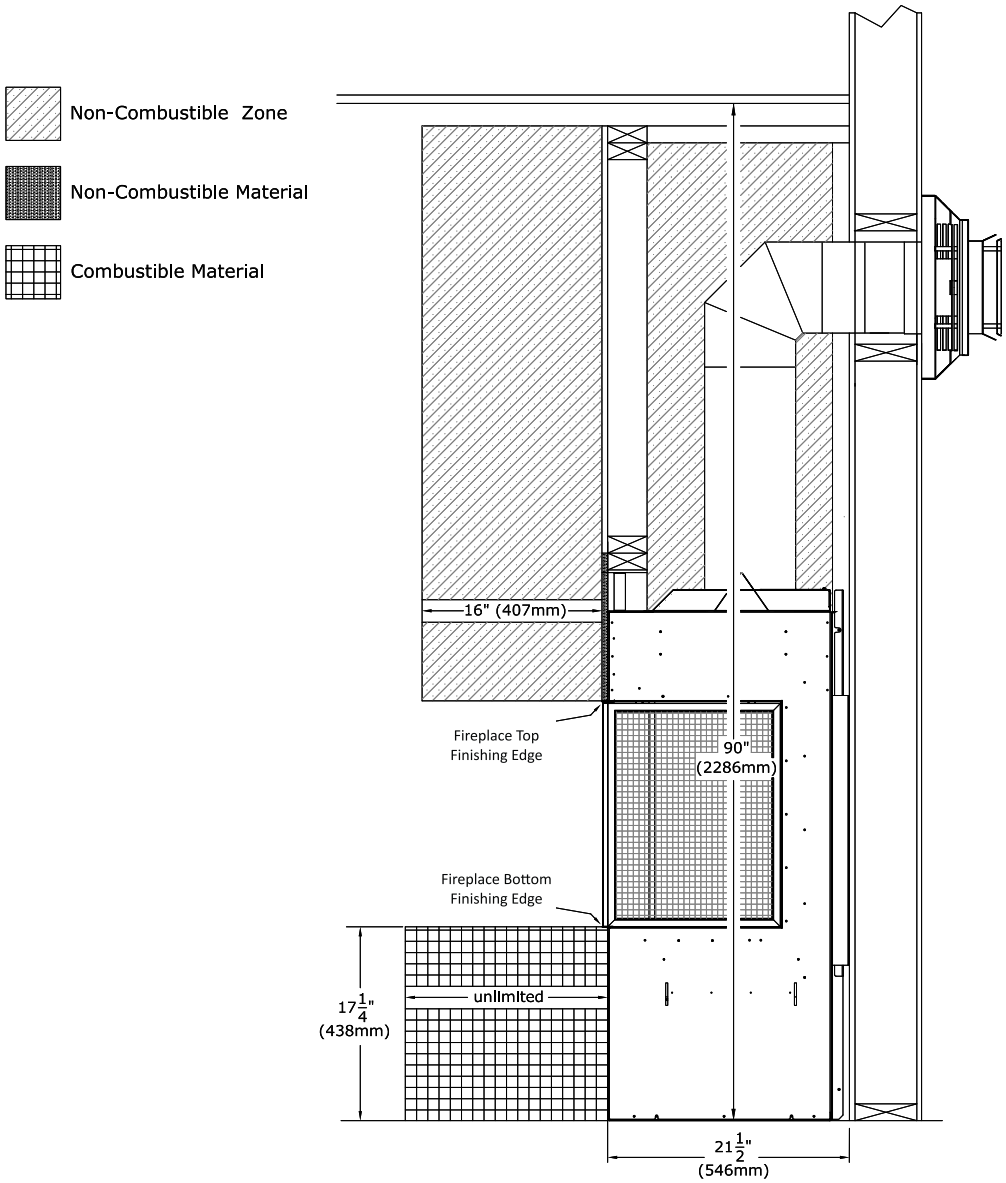

Figure 2.19 - Chamber and Hearth Projection

2.5 Hearth, Mantel, Front Chamber, and Side Chamber Projection for Vented Cavity Options (continued)

The image below shows the non-combustible 16” front and side projection with an unlimited combustible hearth.

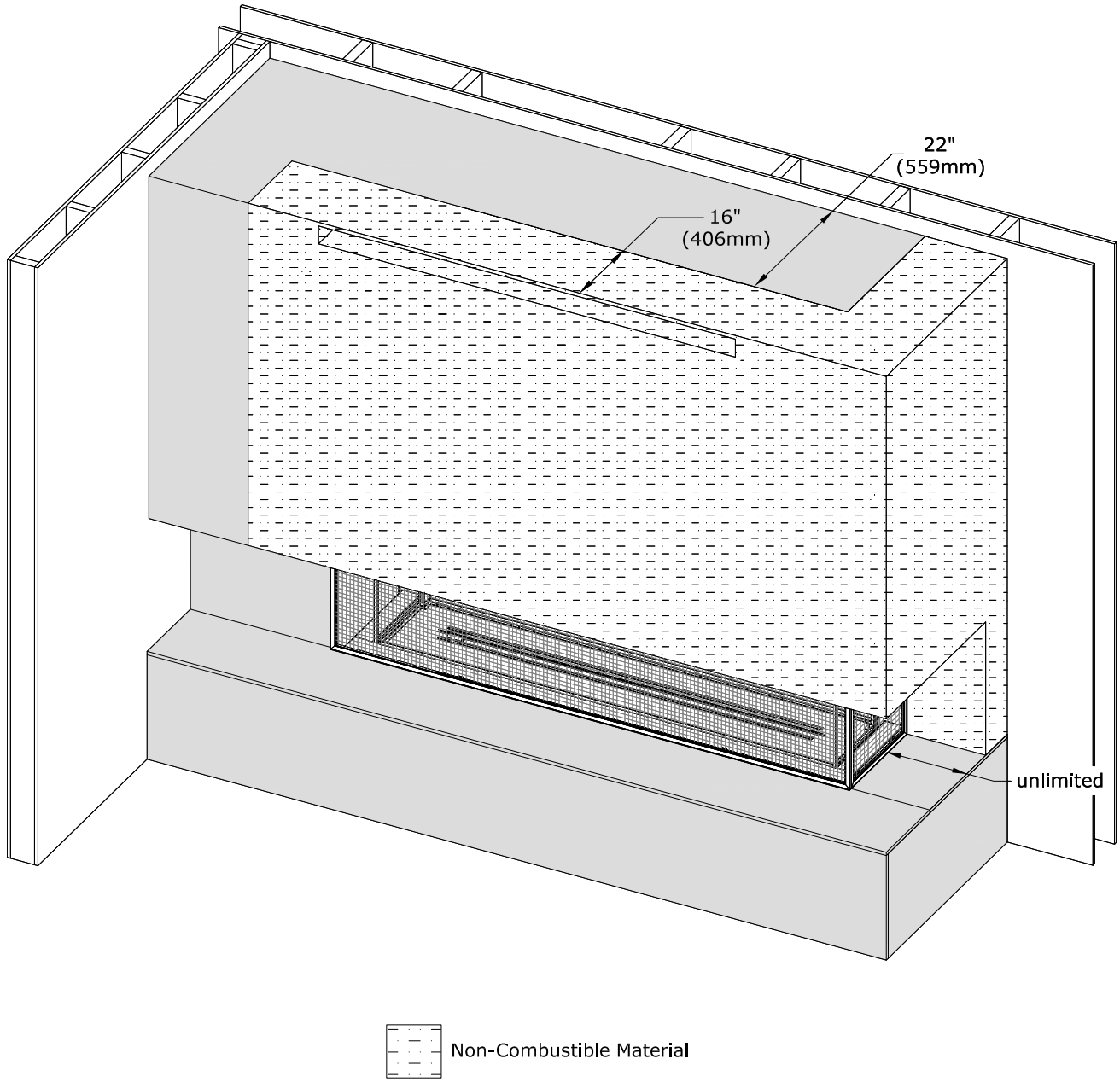

Figure 2.20 - Front and Side Projection

2.5.3 How to Construct a Chamber Projection with a Vented Cavity

This section is an overview of the steps in constructing a chamber projection when using a Vented Cavity. Figures 2.21 and 2.22 show a vented cavity that is open to the front of the chamber. You are required to construct the fireplace chamber and then install facing material first to ensure the convective cooling process of air entering the fireplace chamber through the fireplace screen and discharging at the top of the chamber via the opening option you have chosen. The convective cooling process of the fireplace chamber is essential.

- Frame out the chamber above the fireplace. Install all the facing material across the entire fireplace chamber which will seal the fireplace chamber from the projection. Pay attention to the required non-combustible facing material as required in Section 2.2.
- Next frame out the projection and ensure the vented cavity air opening maintains the required clearances. Lastly install the non-combustible facing material and finishing material on the projection. The entire chamber projection must be constructed out of non-combustible material. The minimum dimensions of heat release openings that you choose are required to be maintained in the initial fireplace chamber and throughout the projection.

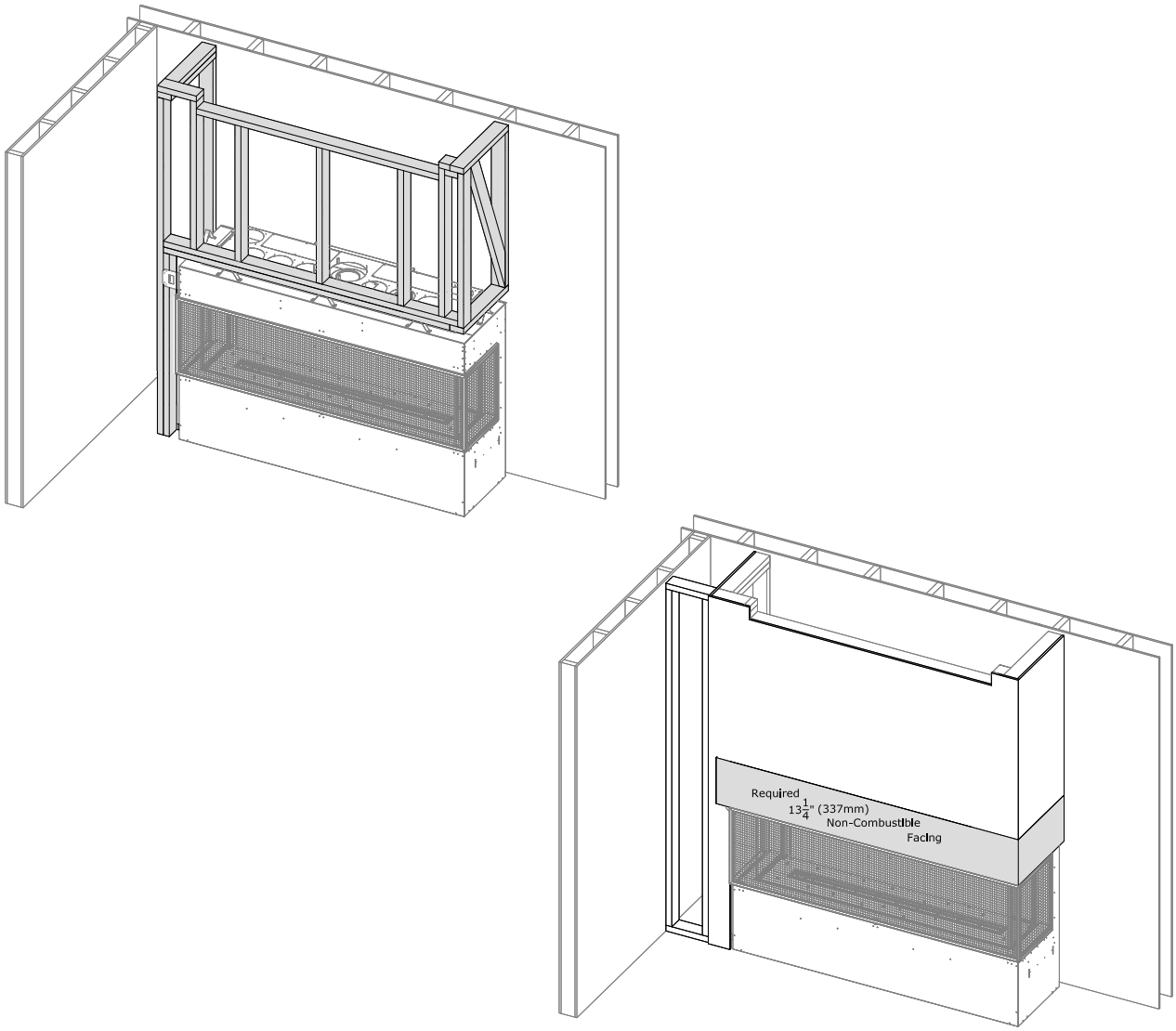

Figure 2.21 - Constructing a Chamber Projection with a Vented Cavity

2.5.3 How to Construct a Chamber Projection with a Vented Cavity (continued)

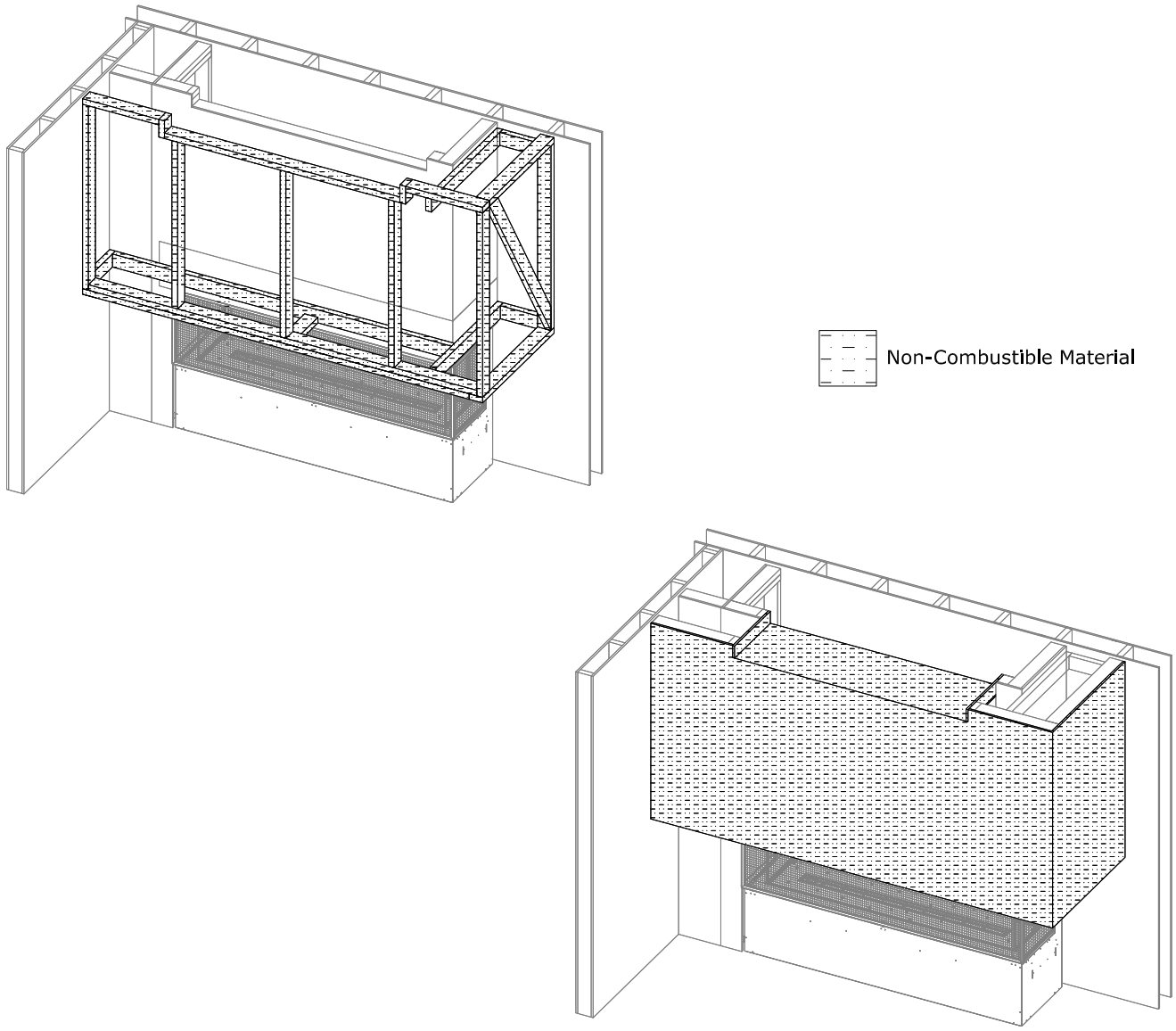

Figure 2.22 - Constructing a Chamber Projection with a Vented Cavity

2.5.4 Corner Fireplace Wall Extensions with a Vented Cavity

When a corner fireplace is operated with one of the vented cavity options you need to ensure the convective cooling process is maintained by keeping the fireplace chamber at the minimum width. You are required to frame and face the fireplace chamber at the minimum width. You can then frame and face wall extensions off either side of the fireplace chamber. See images below.

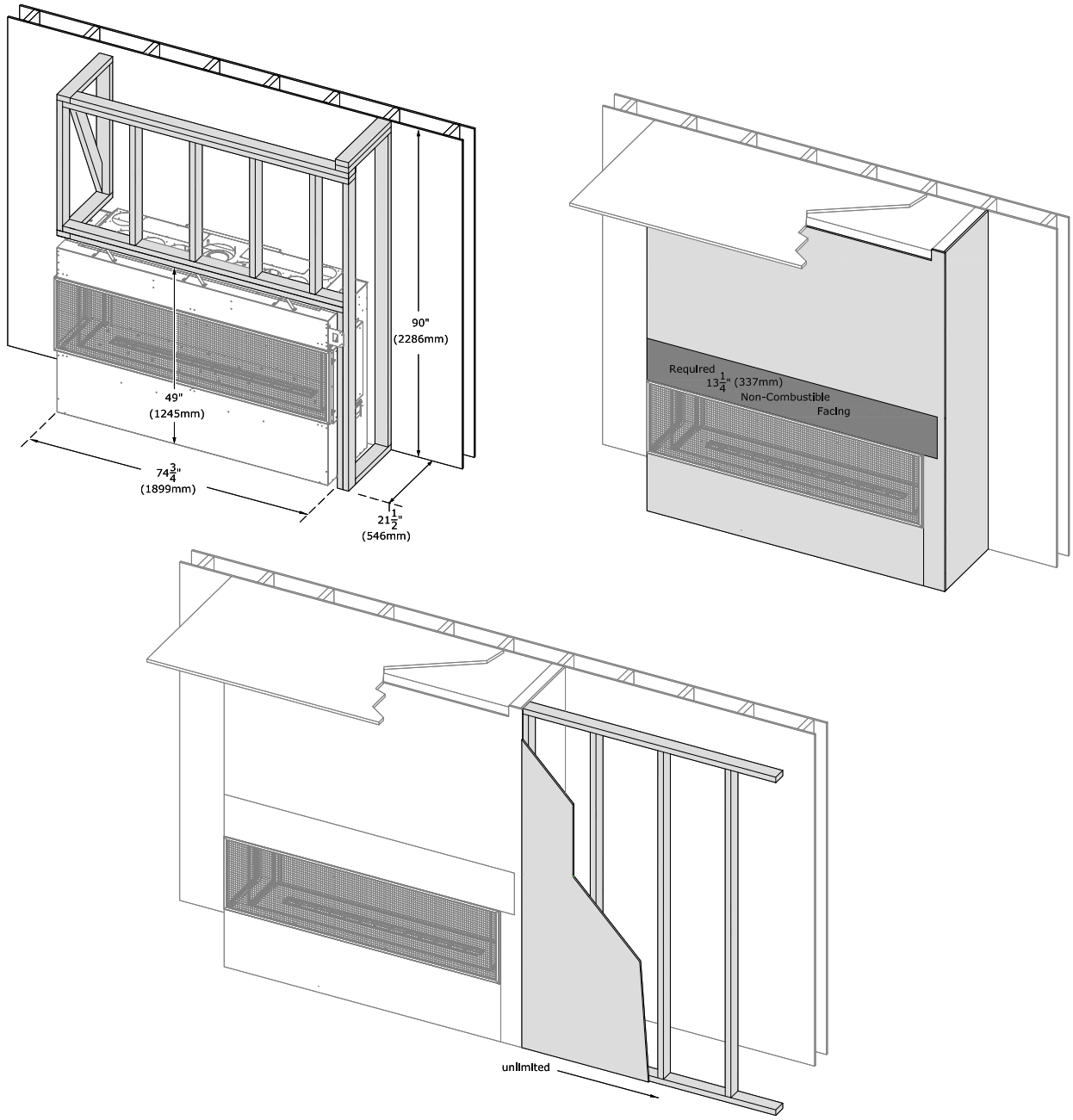

Figure 2.23 - Wall Extension - Corner FIreplace

2.6 Clearance to a Sidewall

The sidewall clearance is taken from the fireplace side finishing edge. The minimum clearance of 16” (406mm) applies to all Vented Cavity and KZK options.

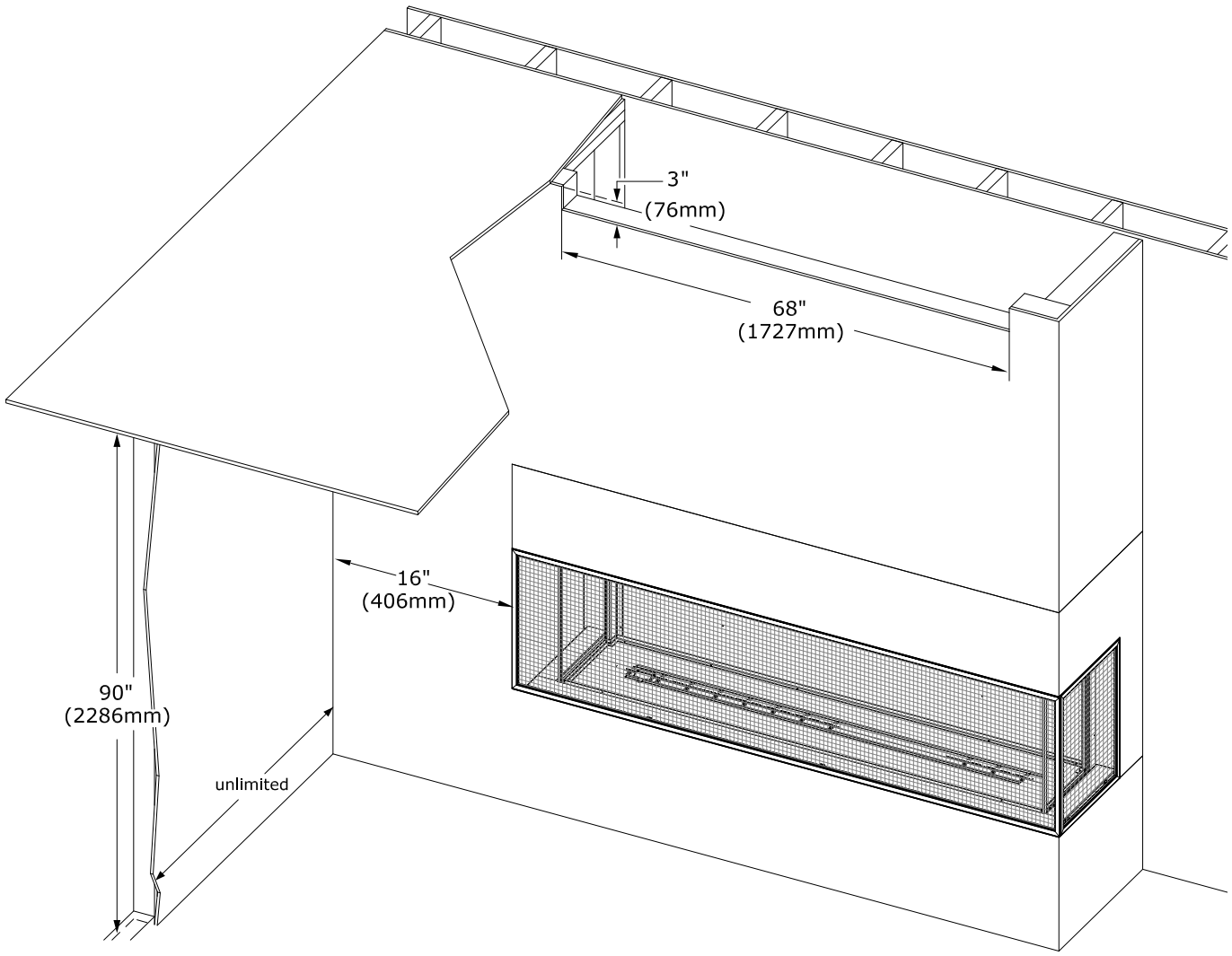

Figure 2.24 - Clearance to Sidewall

3.0 Three-Sided (Bay) Installation

The information provided in this section will cover topics related to installing this fireplace in its 3-sided configuration. The topics include: framing, facing material, finishing material, cooling the fireplace chamber, and chamber clearances.

3.1 Framing

Note: Unless otherwise noted all clearances / images in this manual are based off of nominal 2” x 4” framing being used.

IMPORTANT: The framing above the fireplace must be self supporting in all installation scenarios. The fireplace is not load-bearing.

WARNING*: Provide adequate clearances around air openings into the combustion chamber. Provide adequate clearance in front of the fireplace for barrier removal, component access, gas line installation, service access, etc.*

CAUTION*: Cold air transfer area. The surround fireplace chase must comply with all clearances as outlined in this manual, and be constructed in compliance with local building codes. Outside walls should be insulated to prevent cold air from entering room.*

- Floor protection in front of the fireplace is not required. Combustible material may be used if installing a hearth extension. Consider the thickness of the hearth extension finishing material if building a fireplace platform. The hearth may be flush with the bottom finishing edge of the fireplace.
- The bottom of the fireplace must be placed directly on a wood or non-combustible surface (not linoleum or carpet). If this appliance is to be installed directly on carpeting, tile, or other combustible material other than wood flooring, this appliance shall be installed on a metal or wood panel extending the full width and depth of the appliance.

IMPORTANT: To cool the fireplace chamber correctly take important consideration when planning out the framing for this fireplace. Look at the different options on how to cool the chamber that are outlined in Section 3.3. You must choose one of the KZK (Komfort Zone Kits) or Vented Cavity options for heat release. The framing will have to accommodate one of these chamber cooling options.

Nominal 2”x4” framing used in interior enclosure framing.

The framing above the fireplace must be self supporting.

The fireplace is NOT load-bearing.

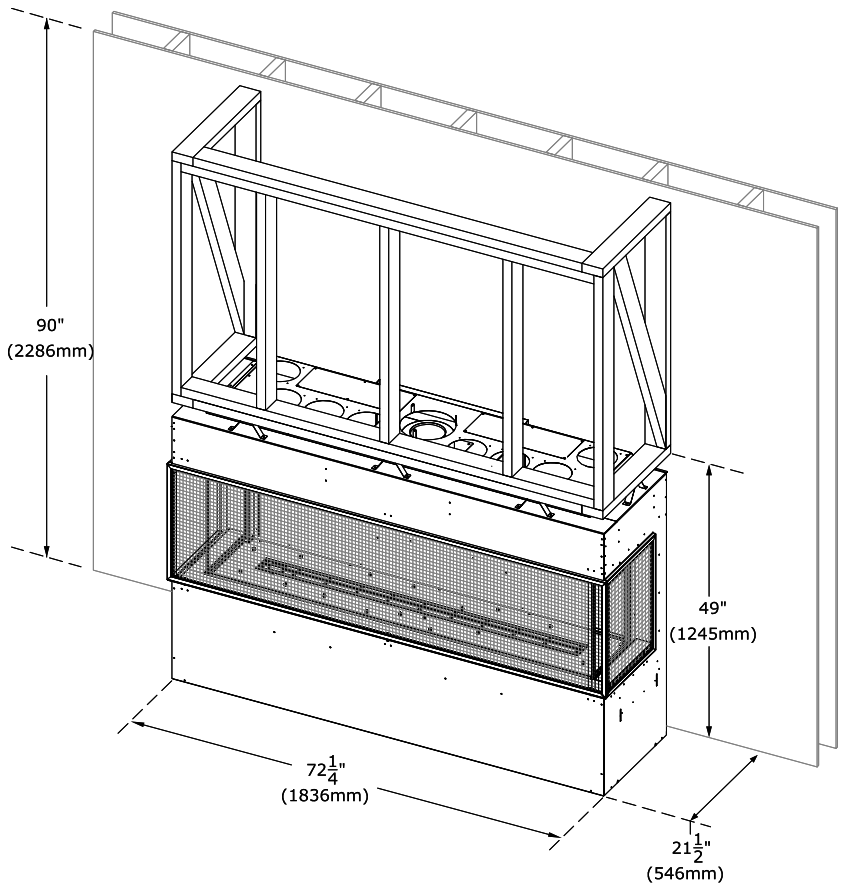

Figure 3.1 - Framing Requirements

3.2 Facing and Finishing Material Requirements

The information in this section shows the minimum non-combustible facing and finishing material requirements. These requirements apply for vented cavity or KZK installations. Figure 3.2 shows the minimum 13-1/4” (337mm) non-combustible facing and finishing material above the fireplace top finishing edge.

Take special consideration where you attach the facing and finishing material to the fireplace as there is a no-screw zone on this fireplace. Make sure the screws only penetrate up to 1/2” (13mm) into the allowed areas of the fireplace. Take consideration of this when choosing screw length based on your facing material thickness.

The image below shows the no screw zone for the facing and finishing material. There is a 1” (25mm) zone below the bottom finishing edge.

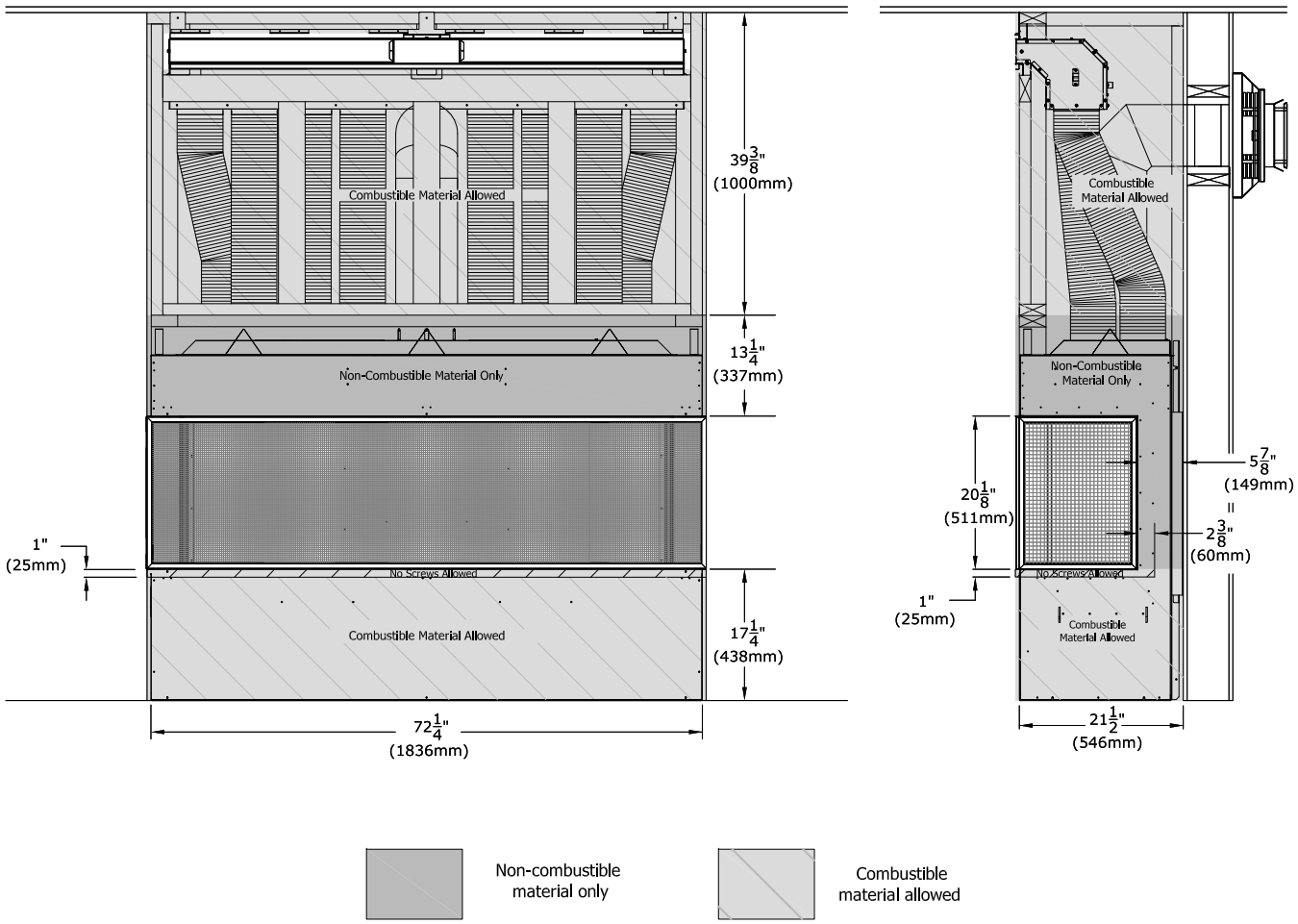

Figure 3.2 - Facing and Finishing Material Requirements

3.3 Requirements to Cool the Fireplace Chamber

IMPORTANT: This fireplace requires airflow to cool the fireplace chamber. Airflow comes into the fireplace through the safety screen(s) and the hot air is discharged at an opening above the fireplace. You must select one of the vented cavity or KZK options to achieve this. This airflow is separate from the air that is used in the vent system and combustion process. Shown below is a visualization of the airflow.

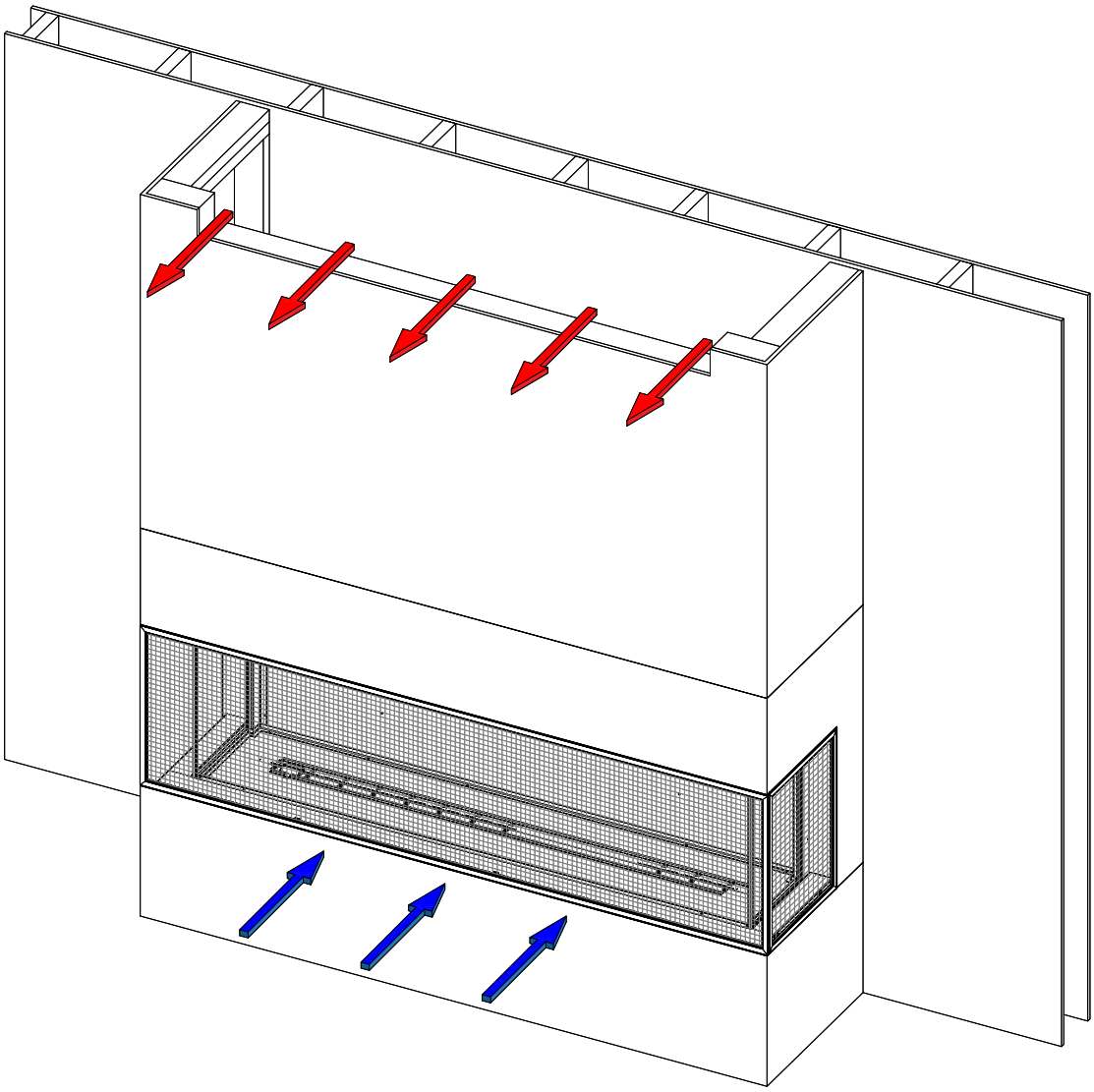

Figure 3.3 - Fireplace Chamber Airflow

3.3.1 KZK Installation Overview

Note: the KZK collars cannot be installed on the fireplace when sliding the fireplace into the framed opening. Install after installing into the framed opening.

Note: Figure 3.4 shows a single sided installation. Your framing may look different depending on the installation option you have chosen.

1. Slide the fireplace into the framed opening. Ensure the two rectangle rear cover plates stay installed on the fireplace.
2. Use the (32) provided sheet metal screws to install the (8) KZK collars on the top of the fireplace.
3. Frame the rough opening of the KZK plenum(s). Refer to all pages of this manual to ensure all framing and finishing materials are considered.
4. Install the plenum(s) into the rough framed opening to maintain minimum clearances to combustibles. If you are installing the front KZK we recommend using the supplied plenum support brackets to help support the weight of the plenum and air duct pipes. Ensure the plenum(s) are level (All KZK Options) and their outlets are not distorted. Additional metal strapping may be needed to support the weight of the air duct pipes depending on the height of installation.
5. Attach the air duct pipes from all (8) plenum vent collars to all (8) fireplace vent collars. An upward slope must be maintained in horizontal section of air duct pipes for proper convection.
6. Install the KZK discharge trim or KZK grilles provided with the kit using the provided screws. If desired, the discharge trim or grilles may be painted using high temperature paint (250F or 121°C). Continue with fireplace installation.

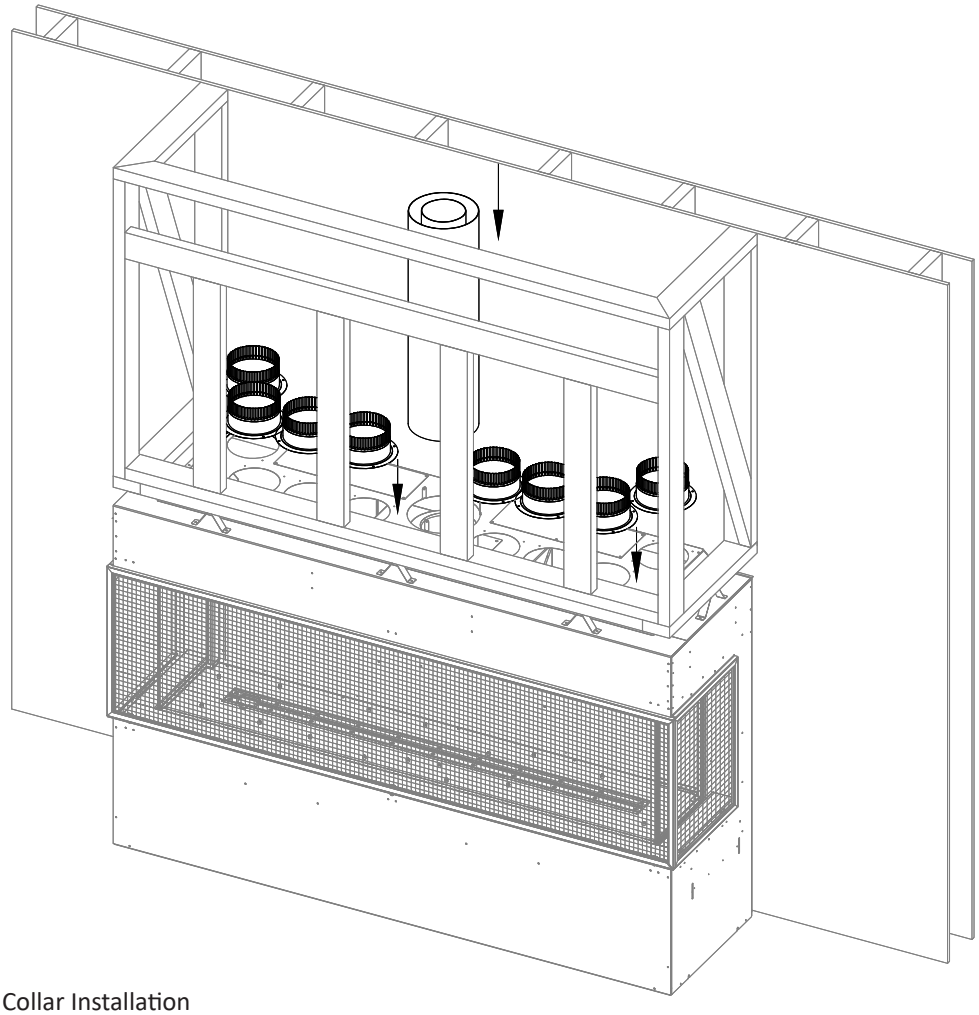

Figure 3.4 - KZK Collar Installation

3.3.2 Front KZK - Part # KZK-068

This section outlines the requirements for using the front KZK option to cool the fireplace chamber.

Kit Contents

ALL kit contents must be installed.

- (1) 68" plenum kit: KZK-068
- (1) plenum discharge trim: KZK-068DT
- (2) plenum support brackets
- (16) 6" collars - (8) attach to the bottom of the plenum; (8) attach to the top of the fireplace.

Additional Required Items

- (2) KZK-410-6 kits (sold separately) are used for a vent run up to 10' (3m). If you are mounting the plenum above the fireplace 10' (3m) or less, use (2) KZK-410-6 kits.

Optional Items

If you are mounting the plenum above the fireplace between 10' (3m) to 20' (6.1m), you will need a total of (4) KZK-410-6 kits and (2) #KZK-CPL6 coupler kits. The (2) KZK-CPL6 coupler kits (sold separately) include the 6" couplers that connect (4) KZK-410-6 kits together.

Plenum Placement

- ***IMPORTANT**: The air duct pipe cannot run horizontally without a vertical rise.*
- ***IMPORTANT**: The 1/2" (13mm) clearance around the air duct pipes must be maintained.*
- Use (2) #KZK-410-6 (or UL181 Class 0 Air Duct piping) to connect the plenum to the unit.
- Hussong Mfg. Co., Inc. requires air duct pipes to be listed as UL181 Class 0 Air Duct to connect the plenum to the unit.
- Maximum Vent Run: 20' (6.10m)

(8) - 10' x 6" (aluminum flex) listed to UL-181 Class 0 Air Duct (sold separately)

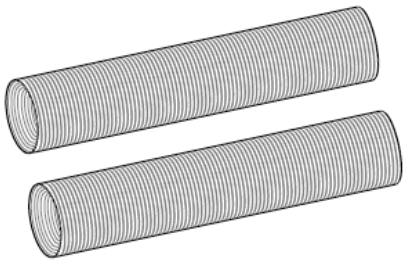

Figure 3.5 - #KZK-410-6 - QTY of 2 kits

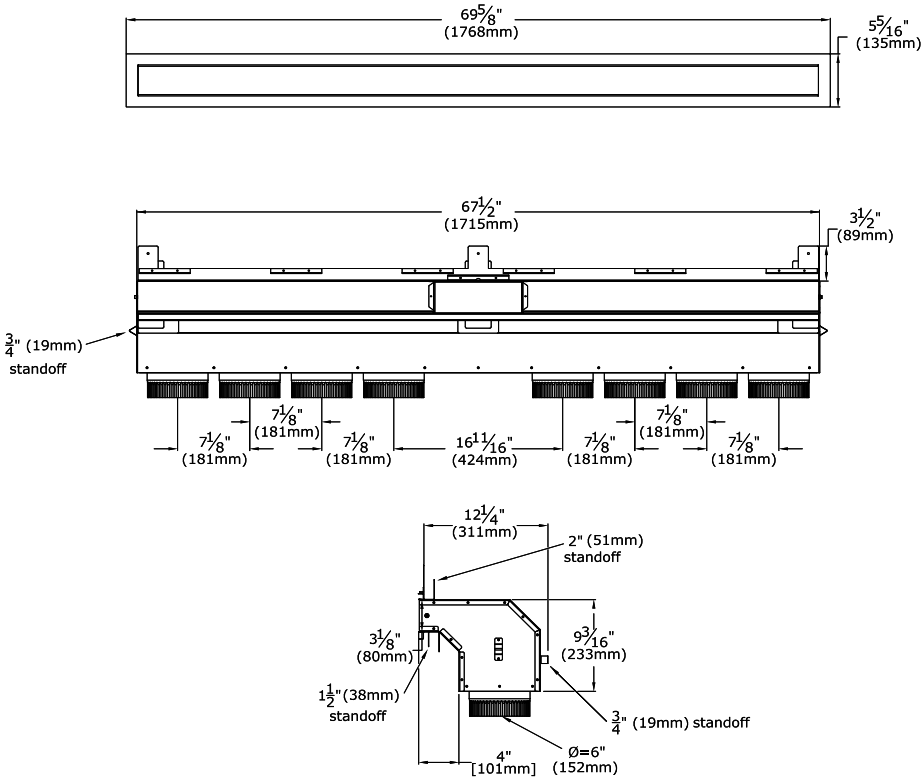

Figure 3.6 - KZK-068 Overview

3.3.2 Front KZK (continued)

Below is the framing information for the front KZK. Figure 3.7 shows the framed opening for the KZK plenum. Figure 3.7 shows the framing information.

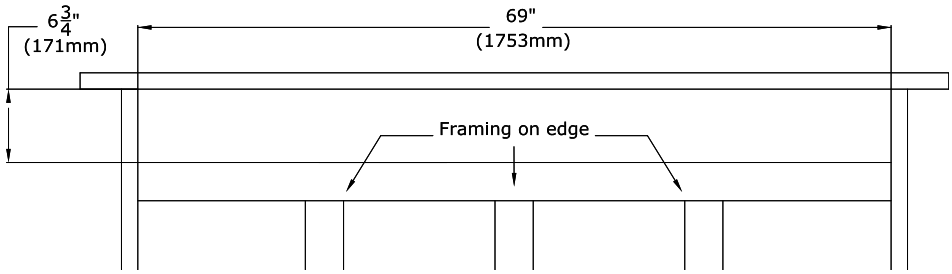

Figure 3.7 - Front KZK - Plenum Framed Opening

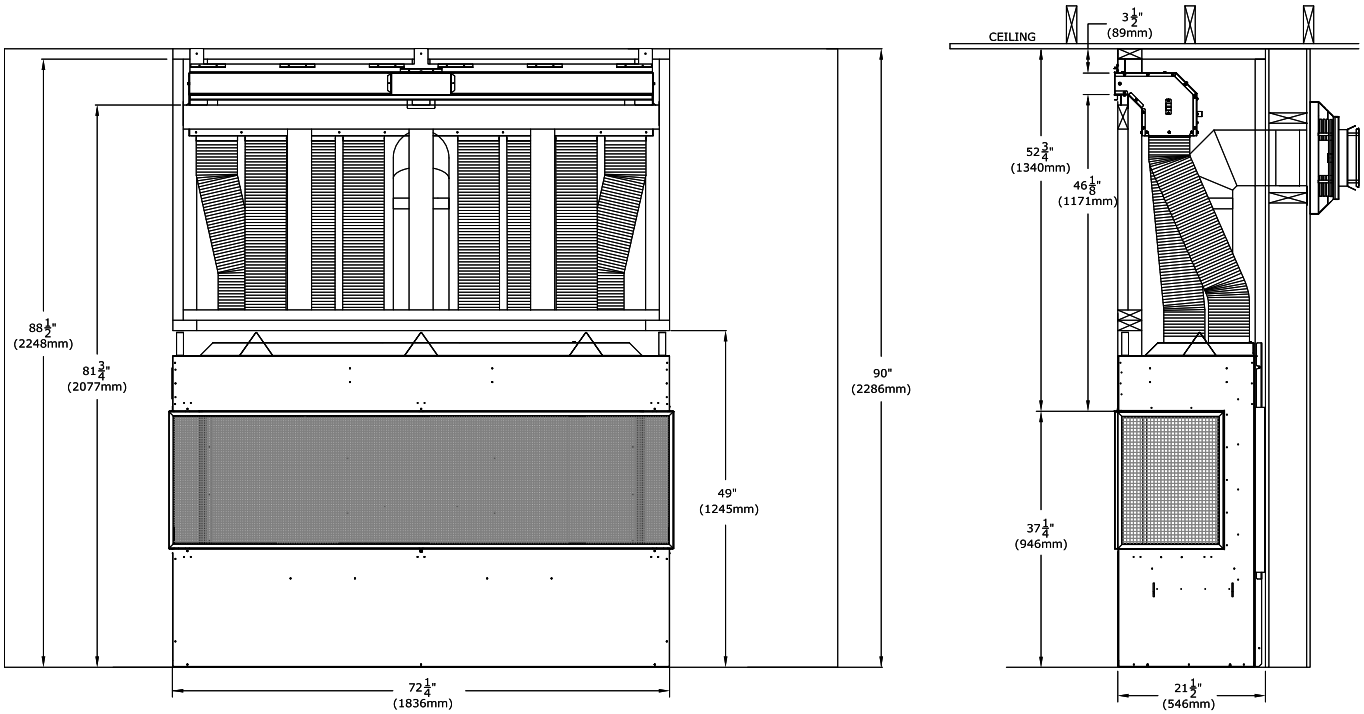

Figure 3.8 - Minimum Chamber Height Plenum Framing

3.3.2 Front KZK (continued)

Shown below in Figure 3.9 are options on how you can finish around the front KZK plenum opening.

- The left image shows combustible facing material such as drywall finished up to the standoffs around the opening of the plenum. Install the KZK discharge trim to cover the edge of the finishing material.
- The right image shows non-combustible finishing material such as tile that is finished up to the opening of the plenum.

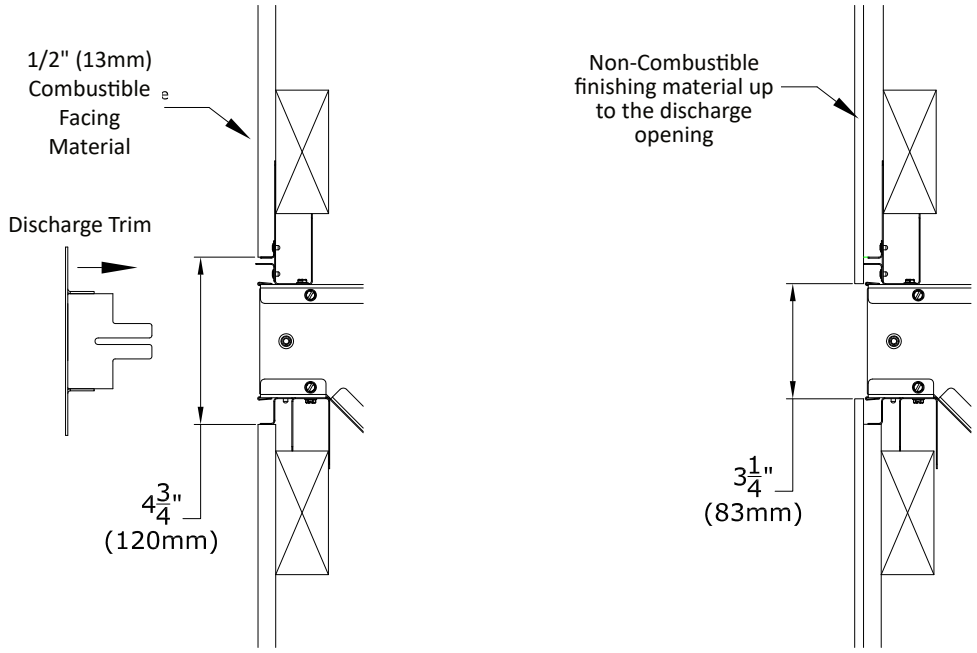

Figure 3.9 - KZK Plenum Air Discharge Opening - Finishing Options

3.3.3 Side KZK - Part # KZK-1616

This section outlines the requirements for using the side KZK option to cool the fireplace chamber.

Kit Contents

ALL kit contents must be installed.

- (2) 16” plenums
- (2) plenum air grilles
- (16) 6" collars - (8) attach to the bottom of the plenums; (8) attach to the fireplace

Additional Required Items

- (2) KZK-410-6 kits (sold separately) are used for a vent run up to 10’ (3m). If you are mounting the plenums above the fireplace 10' (3m) or less, use (2) KZK-410-6 kits.

Optional Items

If you are mounting the plenums above the fireplace between 10' (3m) to 20' (6.1m), you will need a total of (4) KZK-410-6 kits and (2) #KZK-CPL6 coupler kits. The (2) KZK-CPL6 coupler kits (sold separately) include the 6" couplers that connect (4) KZK-410-6 kits together.

Plenums Placement

- ***IMPORTANT**: The air duct pipe cannot run horizontally without a vertical rise.*
- ***IMPORTANT**: The 1/2" (13mm) clearance around the air duct pipes must be maintained.*
- Use (2) #KZK-410-6 (or UL181 Class 0 Air Duct piping) to connect the plenums to the unit.
- Hussong Mfg. Co., Inc. requires pipes to be listed as UL181 Class 0 Air Duct to connect the plenums to the unit.
- Maximum Vent Run: 20’ (6.10m)

(8) - 10’ x 6” (aluminum flex) listed to UL-181 Class 0 Air Duct (sold separately)

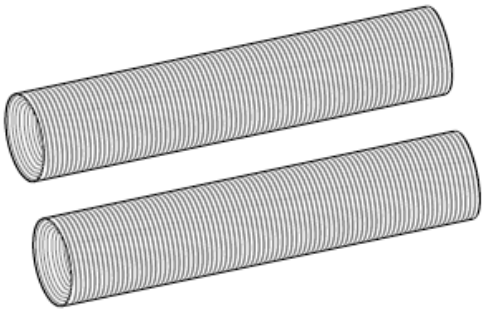

Figure 3.10 - #KZK-410-6 - QTY of 2 kits

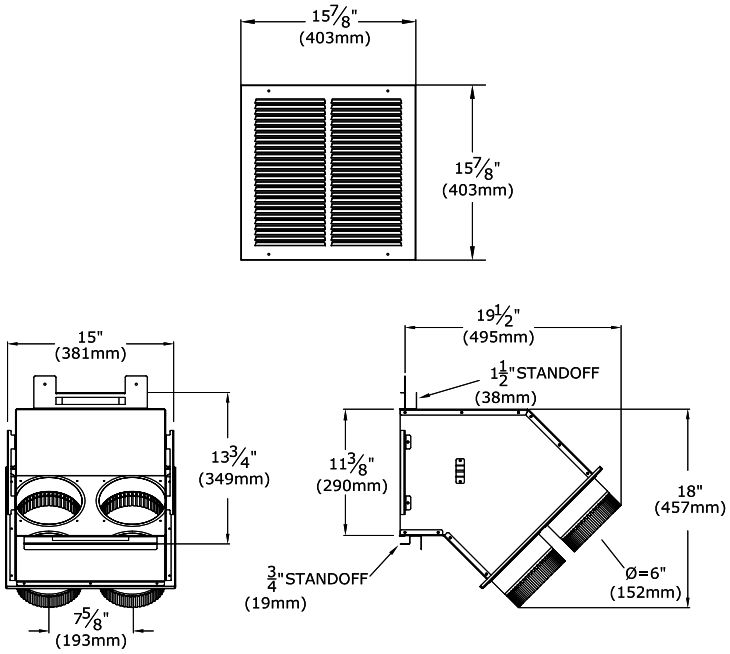

Figure 3.11 - KZK-1616 Overview

3.3.3 Side KZK Opening (continued)

Below is the framing information for the side KZK. Figure 3.12 shows the framed opening for each of the plenums in the side KZK.

IMPORTANT: In the drawing shown there is an arrow pointing to the dashed line along the back framing stud. You will have to notch 1/2” (13mm) out of the stud for the side KZK to fit.

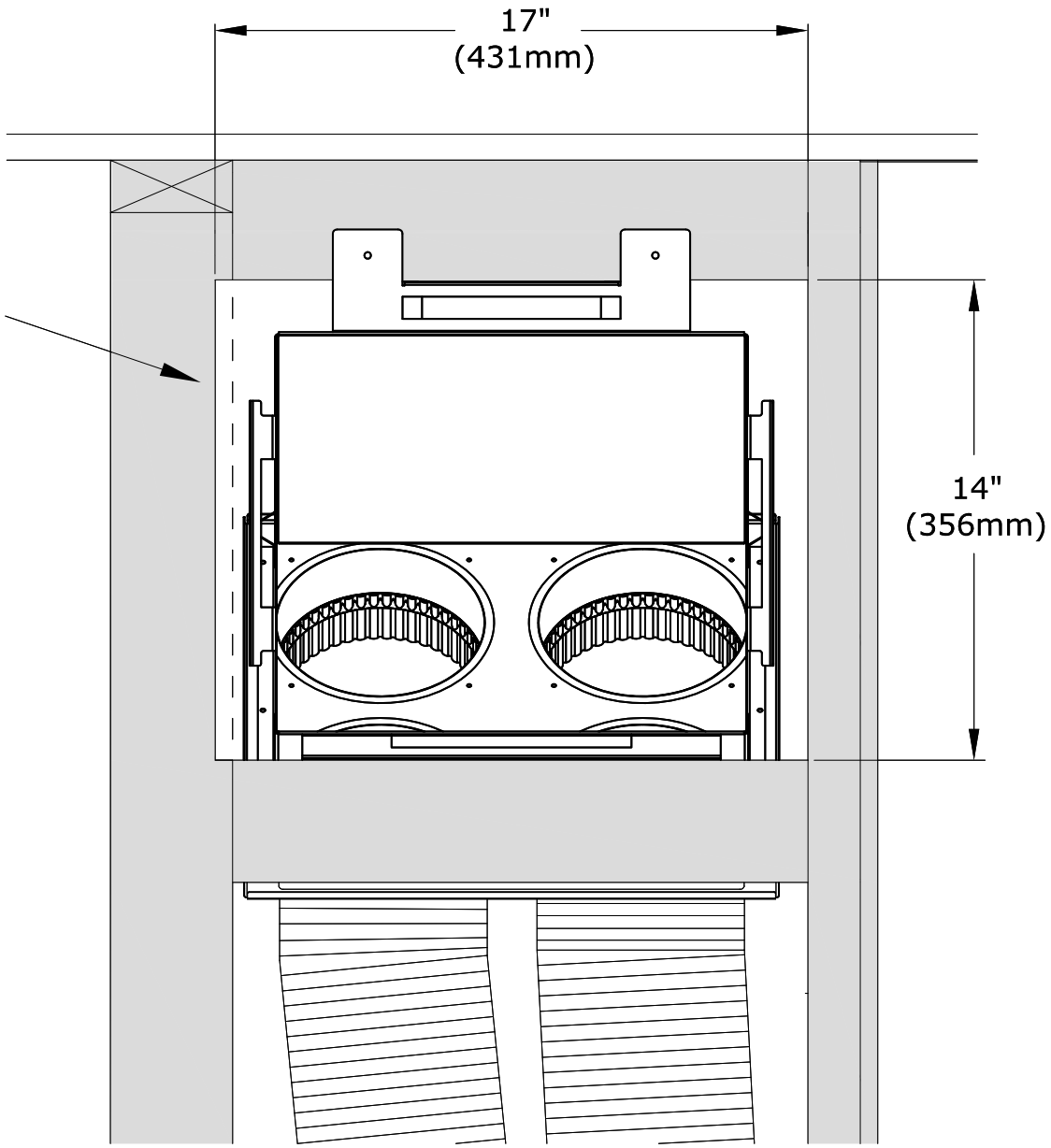

Figure 3.12 - Side KZK - Plenum Framed Opening

3.3.3 Side KZK Opening (continued)

Below is the framing information for the side KZK. Minimum chamber dimensions are shown in Figure 3.13.

Figure 3.14 shows combustible facing material such as drywall finished up to the standoffs around the opening of the plenum. Install the KZK grille to cover the edge of the finishing material.

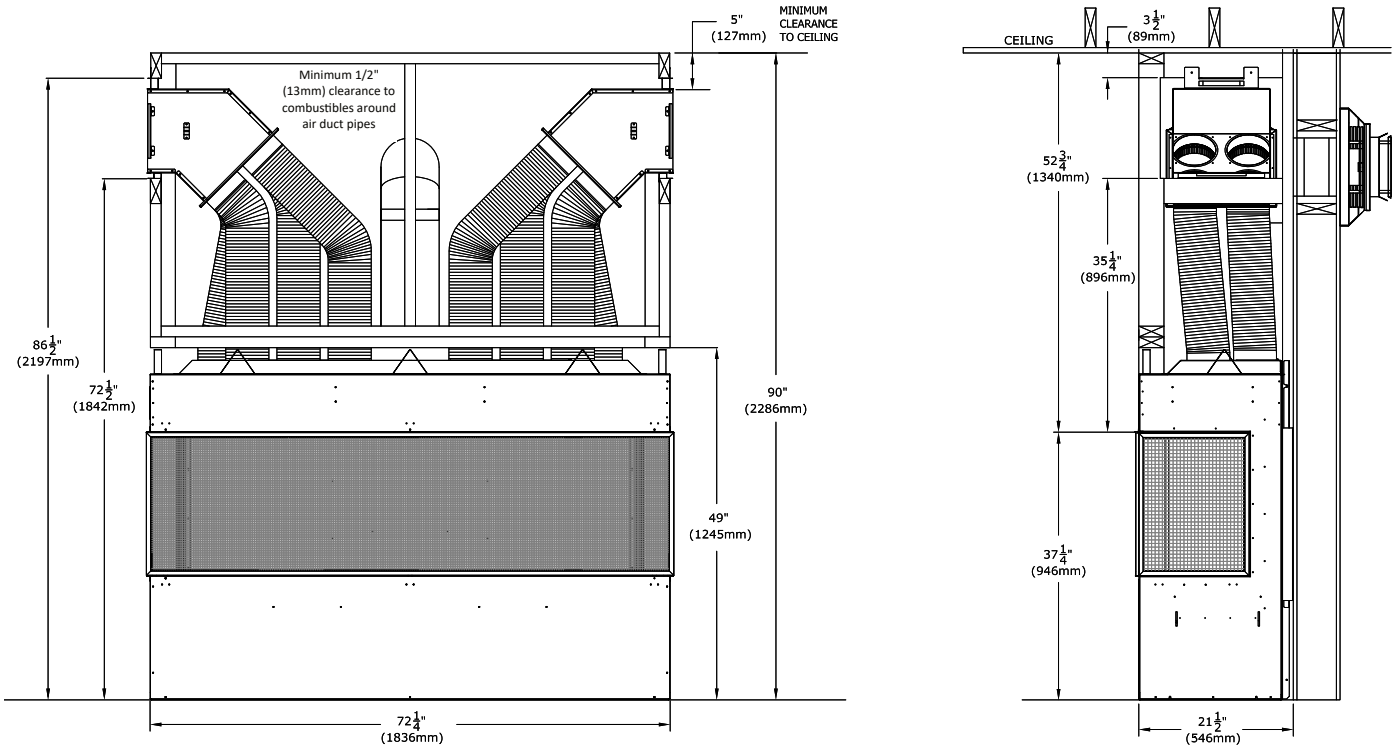

Figure 3.13- Minimum Chamber Height Plenum Framing

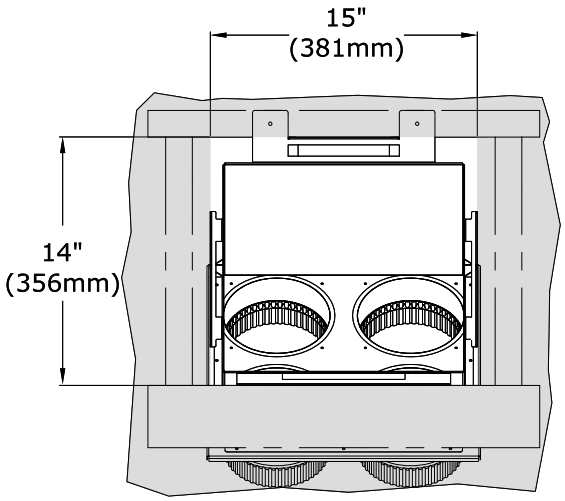

Figure 3.14 - Finishing Side KZK Plenum Opening

3.3.4 Vented Cavity Installation Overview

1. Remove the (2) rectangle cover plates located on the top of the fireplace as shown in Figure 3.15. Discard the (2) plates.
2. Slide the fireplace into the framed opening.
3. Frame the rough opening of the vented cavity option you have chosen to maintain minimum clearances to combustibles.

Three-Sided (Bay) Installation - Cover plates are removed for all vented cavity installations shown in Section 3.3.5, 3.3.6, and 3.3.7.

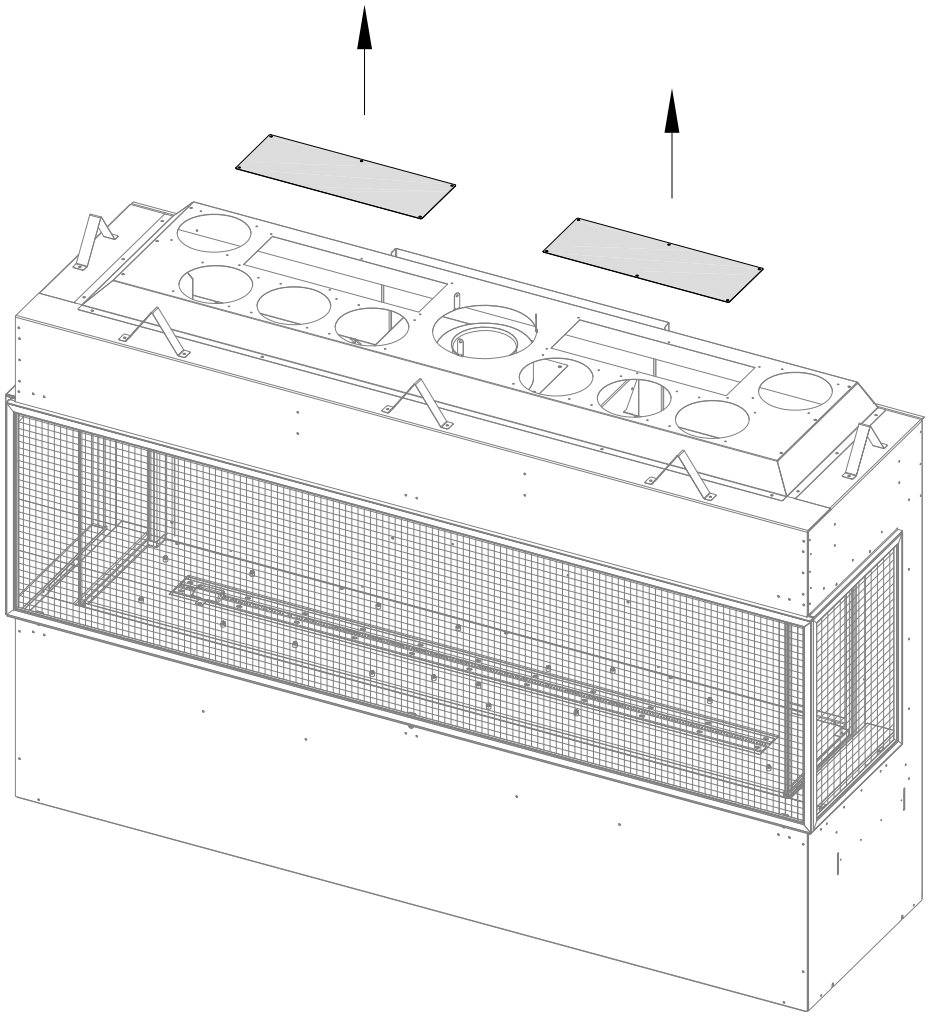

Figure 3.15 - Vented Cavity Cover Plate Removal

3.3.5 Vented Cavity Openings - All Three Sides Of Chamber

Shown below is minimum requirements for the heat release opening where the openings are on all three sides of the chamber.

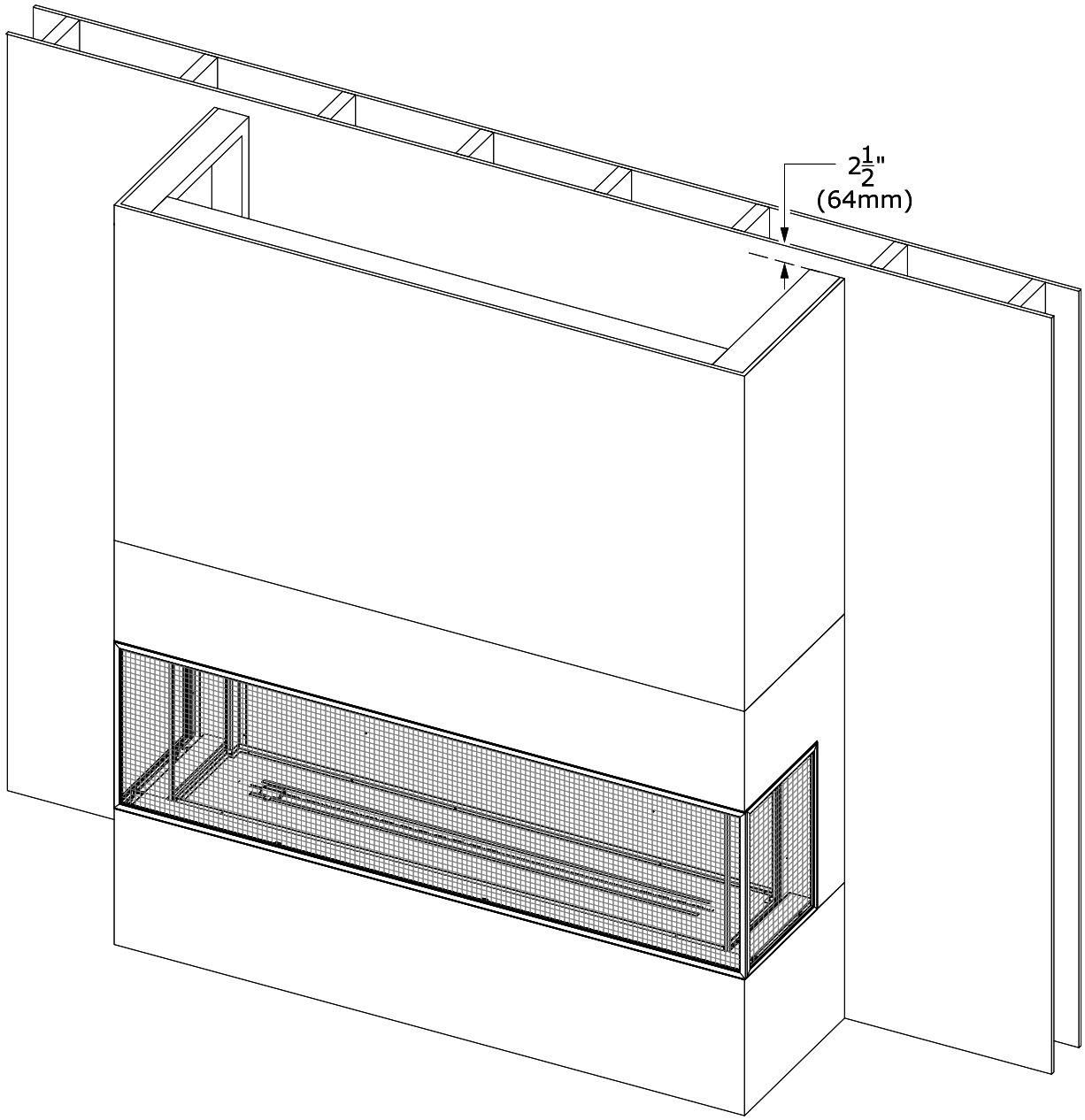

Figure 3.16 - Air Openings - Three-Sided Installation

3.3.5 Vented Cavity Openings - All Three Sides Of Chamber (continued)

The figures on this page show how you can visually conceal the heat release opening. This may provide a more desirable appearance. Figure 3.17 shows the use of crown molding. Figure 3.18 shows an overhang.

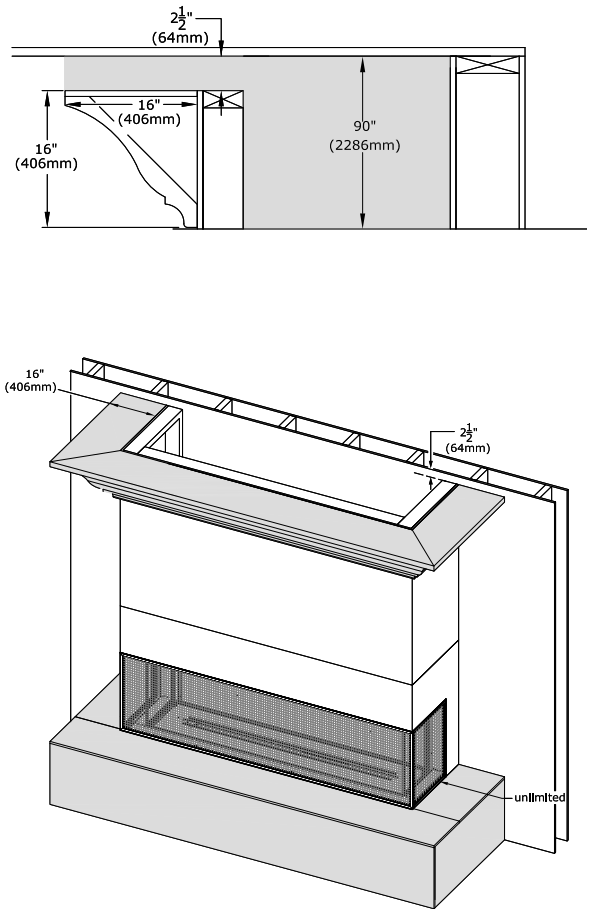

Figure 3.17 - Crown Molding - Three Sided Vented Cavity

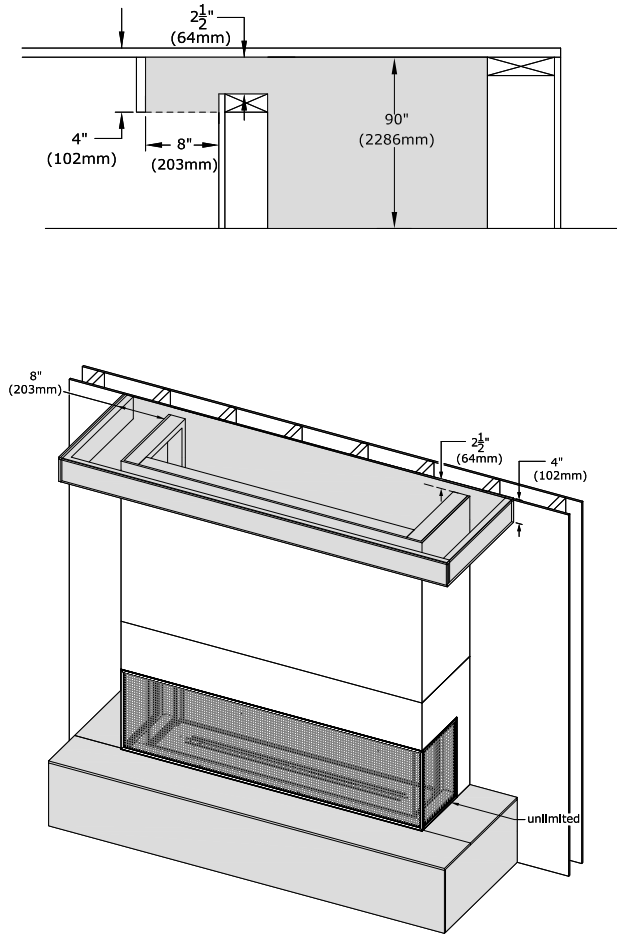

Figure 3.18 - Overhang - Three Sided Vented Cavity

3.3.6 Vented Cavity Openings - Front Of The Chamber

Shown below is the minimum requirement for the heat release opening where the openings are on the front of the chamber only.

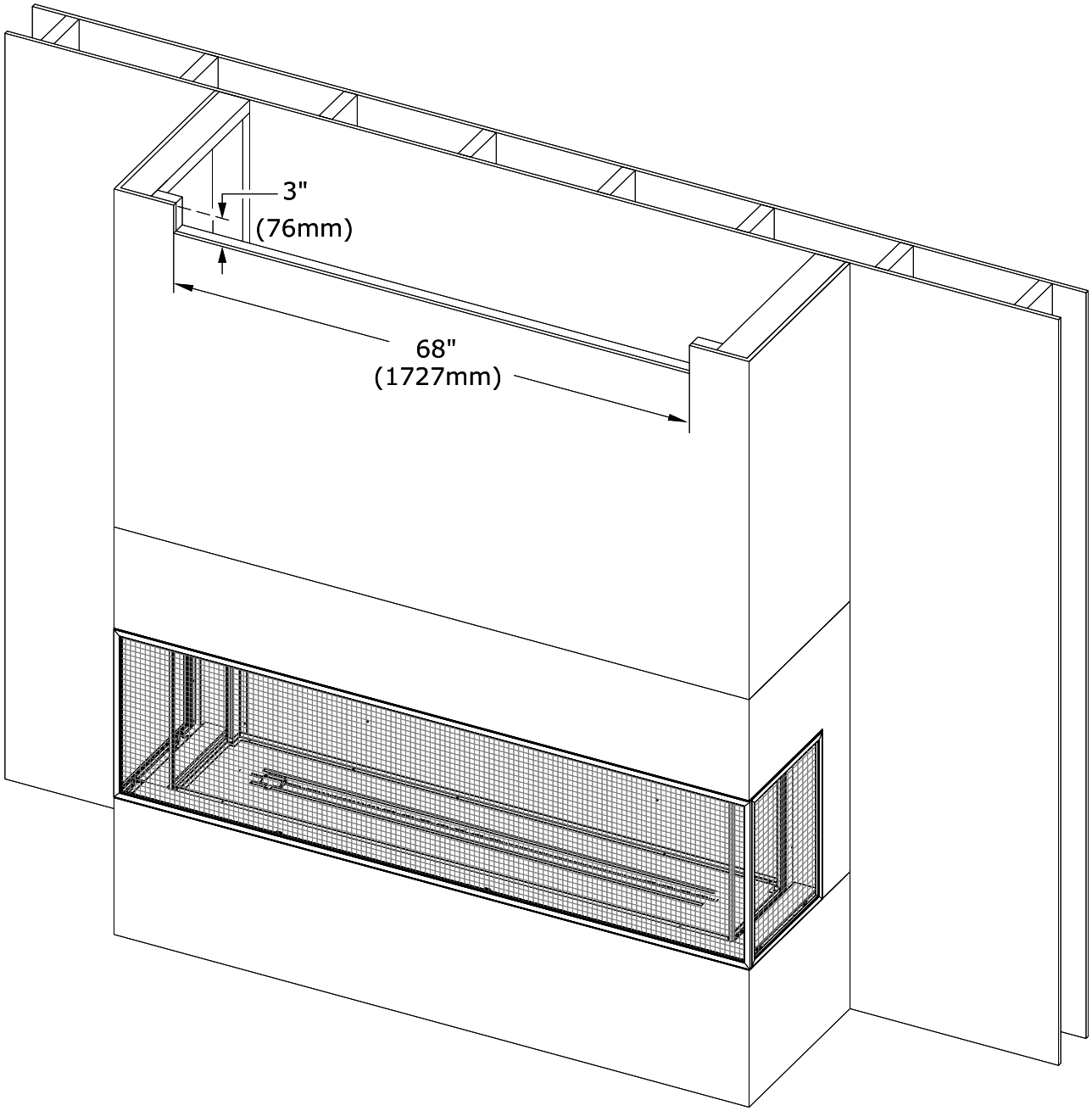

Figure 3.19 - Air Opening - Front Facing Vented Cavity

3.3.6 Vented Cavity Openings - Front Of The Chamber (continued)

The figures on this page show how you can visually conceal the heat release opening. This may provide a more desirable appearance. Figure 3.20 shows the use of crown molding. Figure 3.21 shows an overhang.

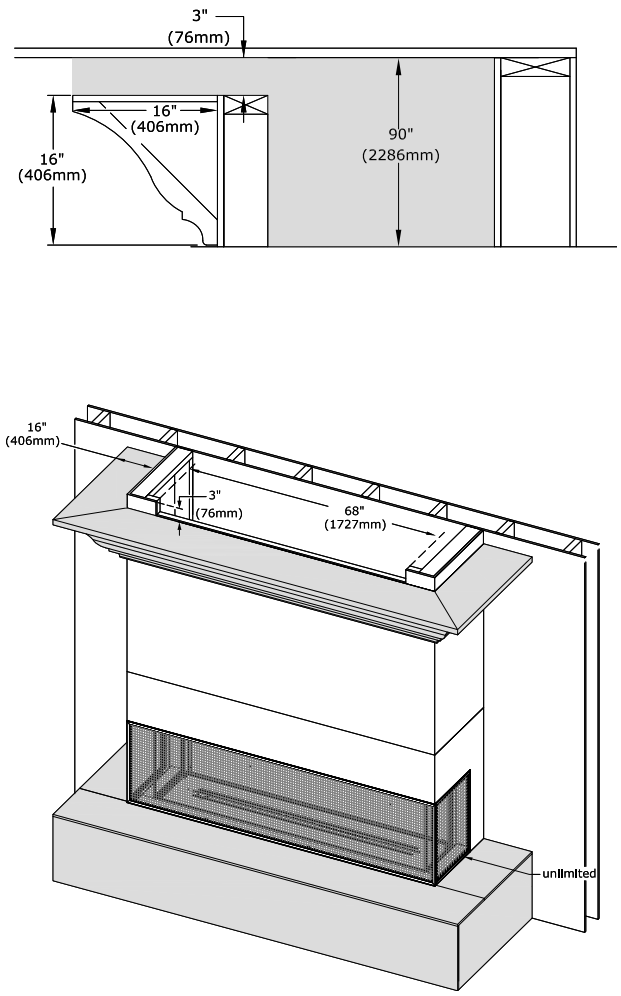

Figure 3.20 - Crown Molding - Front Facing Vented Cavity

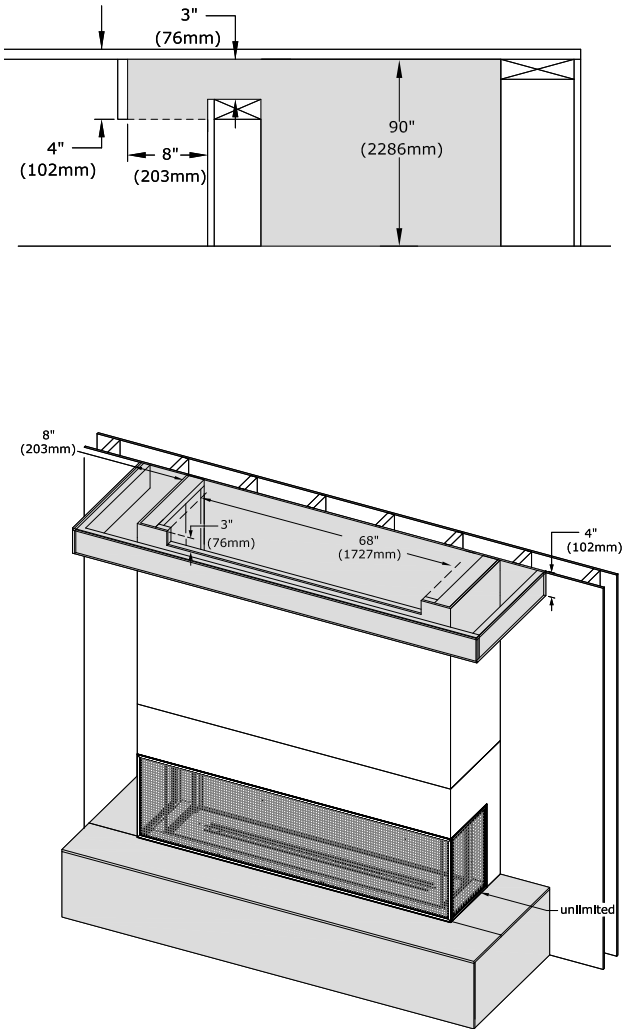

Figure 3.21 - Overhang - Front Facing Vented Cavity

3.3.7 Vented Cavity Openings - Combination of Front and Side Openings

See this section for the option of side chamber heat release openings. The minimum requirements are shown in this section. The figure below shows the side heat release opening. You would order part# KZK-SPG3 for the approved side grilles. The louvers of the grille must face down.

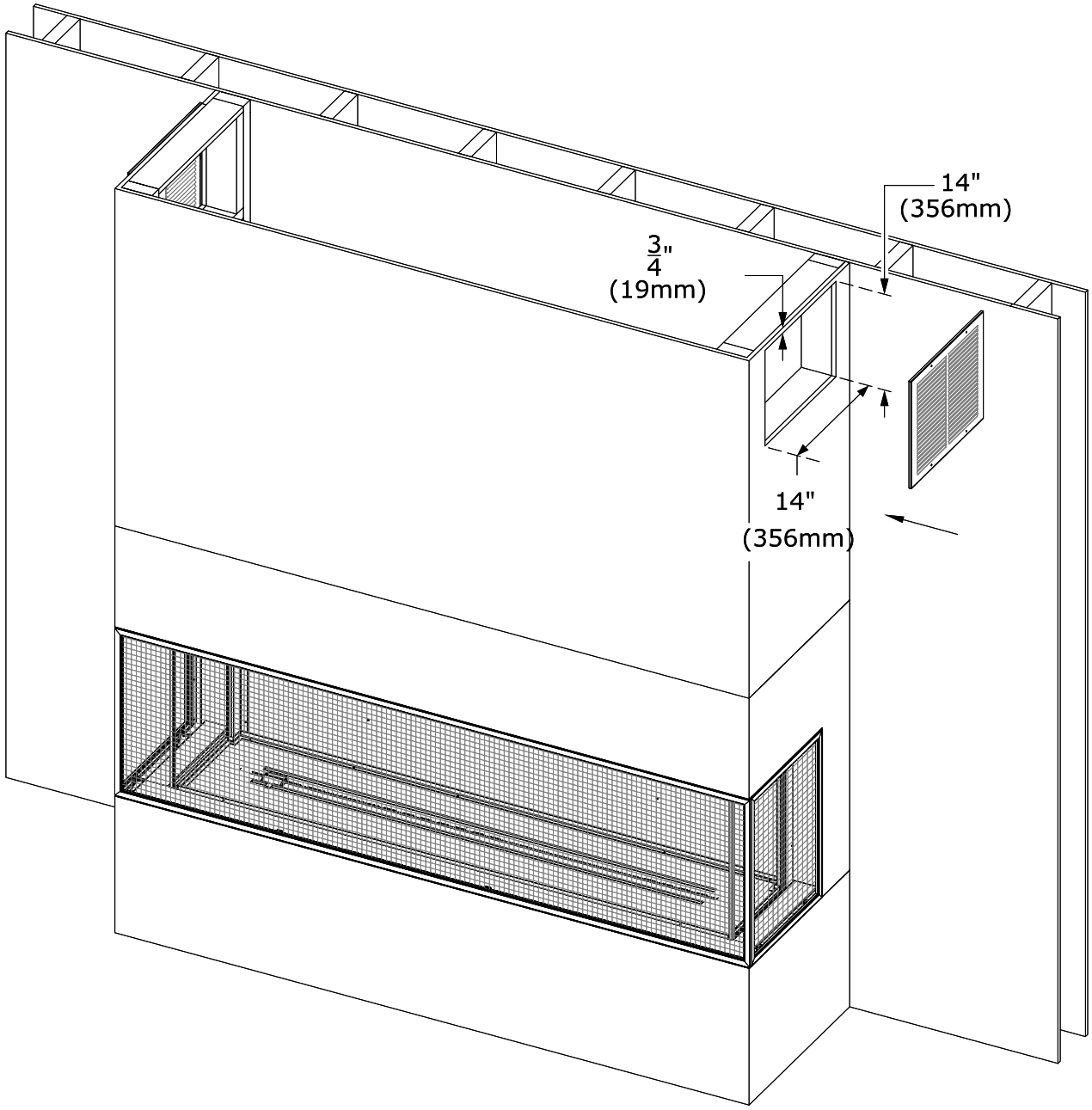

Figure 3.22 - Heat Release - Side Opening Option

3.4 Hearth, Mantel, Front Chamber Projection, and Side Chamber Projection for KZK Options

NOTE: A maximum of 16” (406mm) total projection is allowed between the mantel and chamber projection (regardless if it is combustible, non-combustible, or a combination). An example would be if you installed a 10” (254mm) front non-combustible chamber projection then you would be allowed up to a 6” (152mm) mantel until you hit the limit of 16” (406mm).

3.4.1 Combustible Hearth and Mantel Requirements

WARNING: All minimum clearances to combustible material MUST be maintained.

- **Combustible Mantel Projections:** A maximum of a 6" (152mm) mantel can be installed at 2” (51mm) above the side and top finishing edge. Mantel projections can increase 1” (25mm) of depth for every 1” of height starting at the 6” (152mm) mantel. See Figure 3.23.
- **Combustible Chamber Projections**: Not allowed.
- **Combustible Hearth**: Combustible hearth can have an unlimited projection. Hearth can be raised flush to the bottom finishing edge. See Figure 3.23.

3.4.2 Non-combustible Mantel and Chamber Projection Requirements

- **Non-combustible Mantel Projections**: A maximum of a 16” (406mm) non-combustible mantel projection is allowed to start at 0” (0mm) front and side top finishing edges of the fireplace. See Figure 3.25.
- **Non-combustible Chamber Projection:** A maximum of a 16” (406mm) non-combustible chamber projection can be installed flush at the front and side top finishing edges of the fireplace. See Figure 3.25.

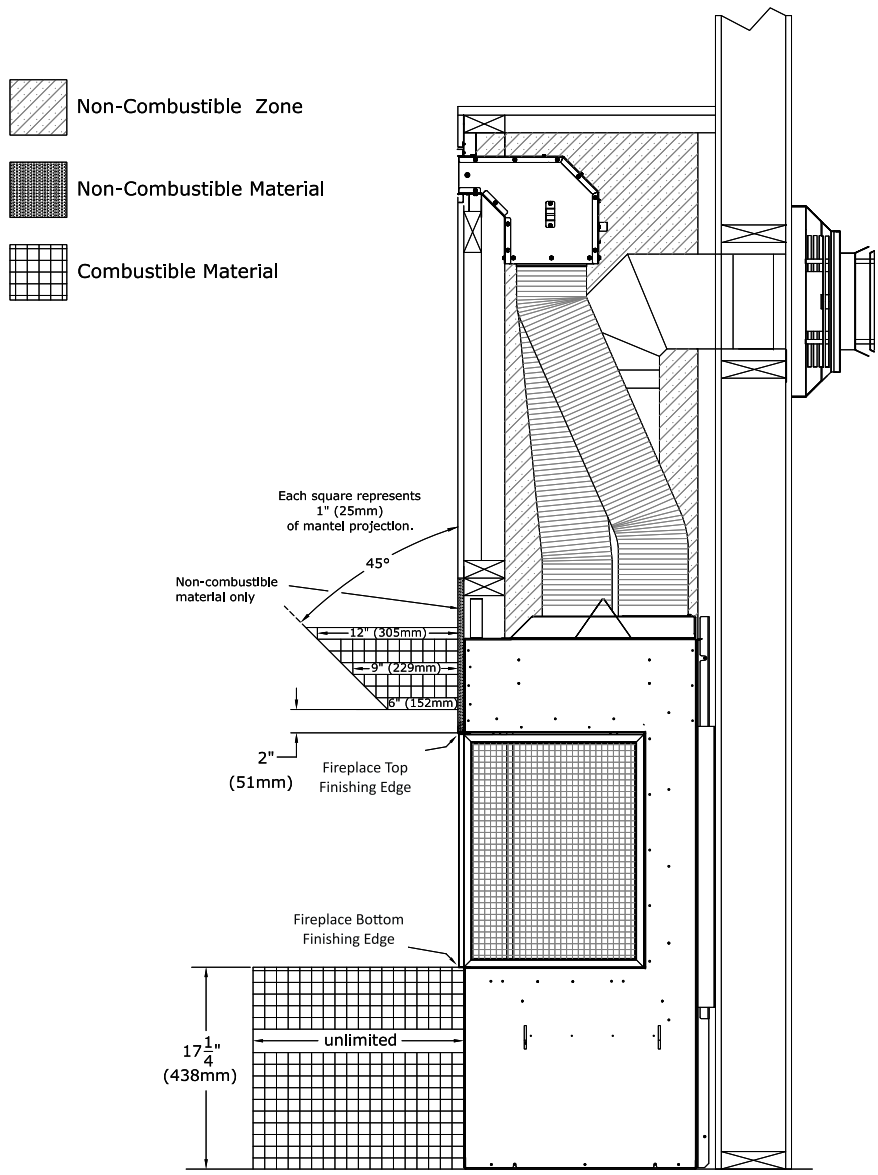

Figure 3.23 - Mantel and Hearth Projection

3.4 Hearth, Mantel, Front Chamber Projection, and Side Chamber Projection for KZK Options (continued)

Figure 3.24 shows the KZK installed in a 16” (406mm) non-combustible front chamber projection. The 16” (406mm) non-combustible projection would also apply to any side chamber projection.

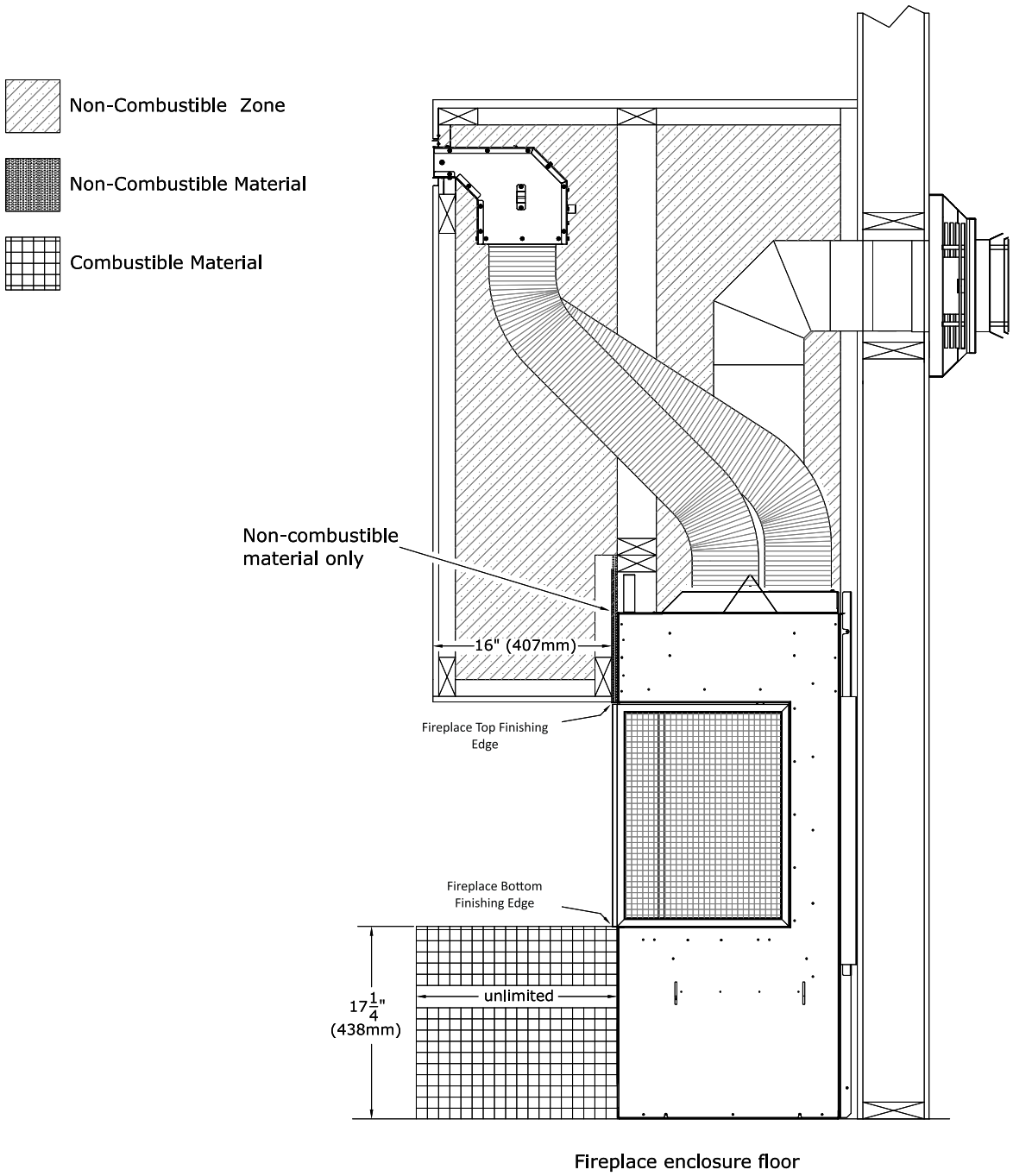

Figure 3.24 - Front Chamber Projection and Hearth Projection

3.4 Hearth, Mantel, Front Chamber Projection, and Side Chamber Projection for KZK Options (continued)

The image below shows the non-combustible material requirements for front and side projection (up to the allowed 16”) with an unlimited combustible hearth.

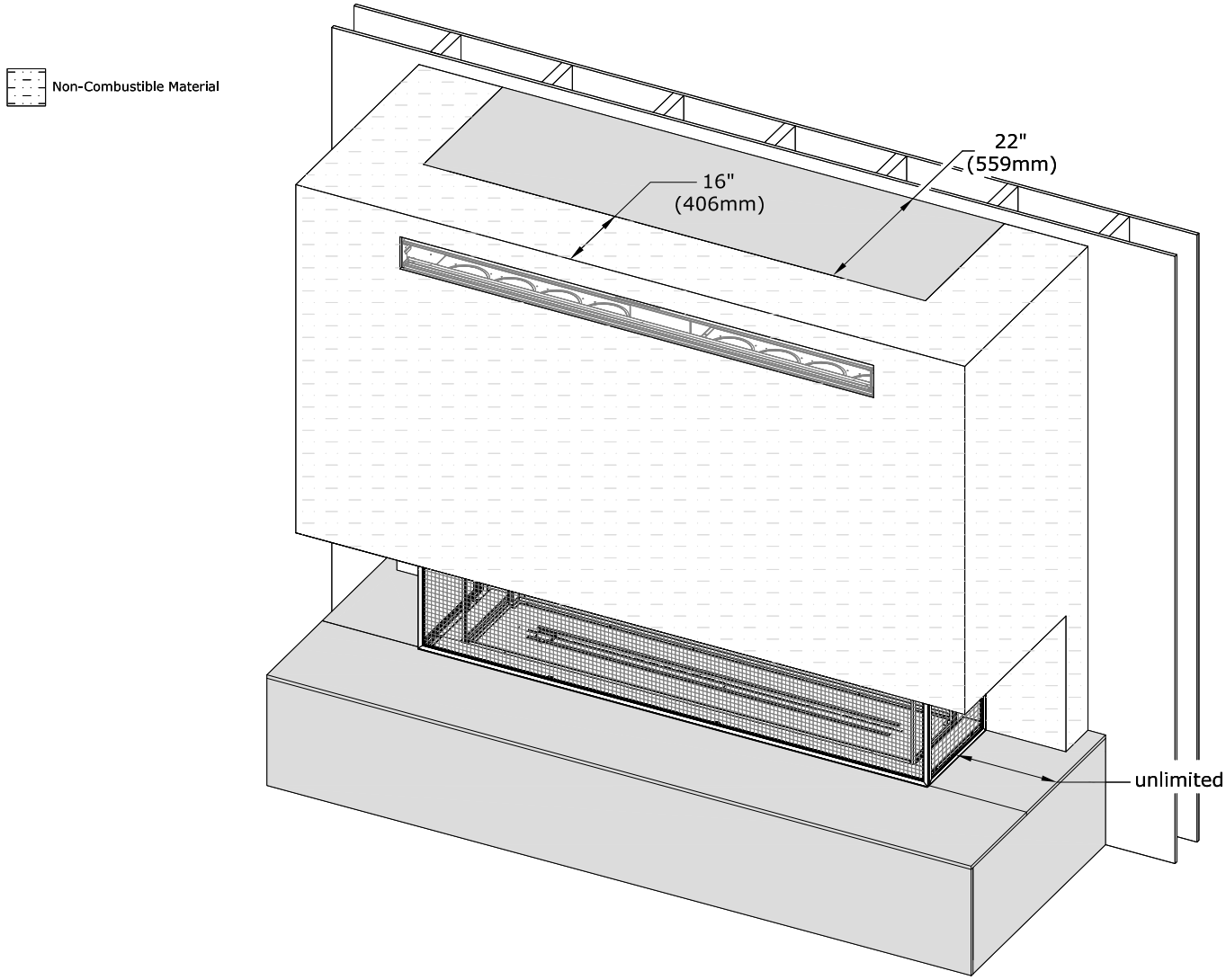

Figure 3.25 - Front and Side Chamber Projection

3.4.3 How to Construct a Chamber Projection with a KZK

This section is an overview of the steps in constructing a chamber projection when using a KZK. Figure 3.26 show a front KZK (KZK-068) application but would apply to side KZK (KZK-1616) as well. The fireplace chamber does NOT need to be sealed separately from the front projection. This is because the air will heat up and rise through the KZK tubes and exit through the KZK plenum(s).

- Frame out the chamber above the fireplace (top left image).
- Next frame out the projection using non-combustible framing and install the KZK (top right image).
- The non-combustible facing and finishing material is required for the chamber projection (bottom image).

IMPORTANT: Maintain 1/2” (13mm) clearance around the KZK air duct pipes to anything combustible.

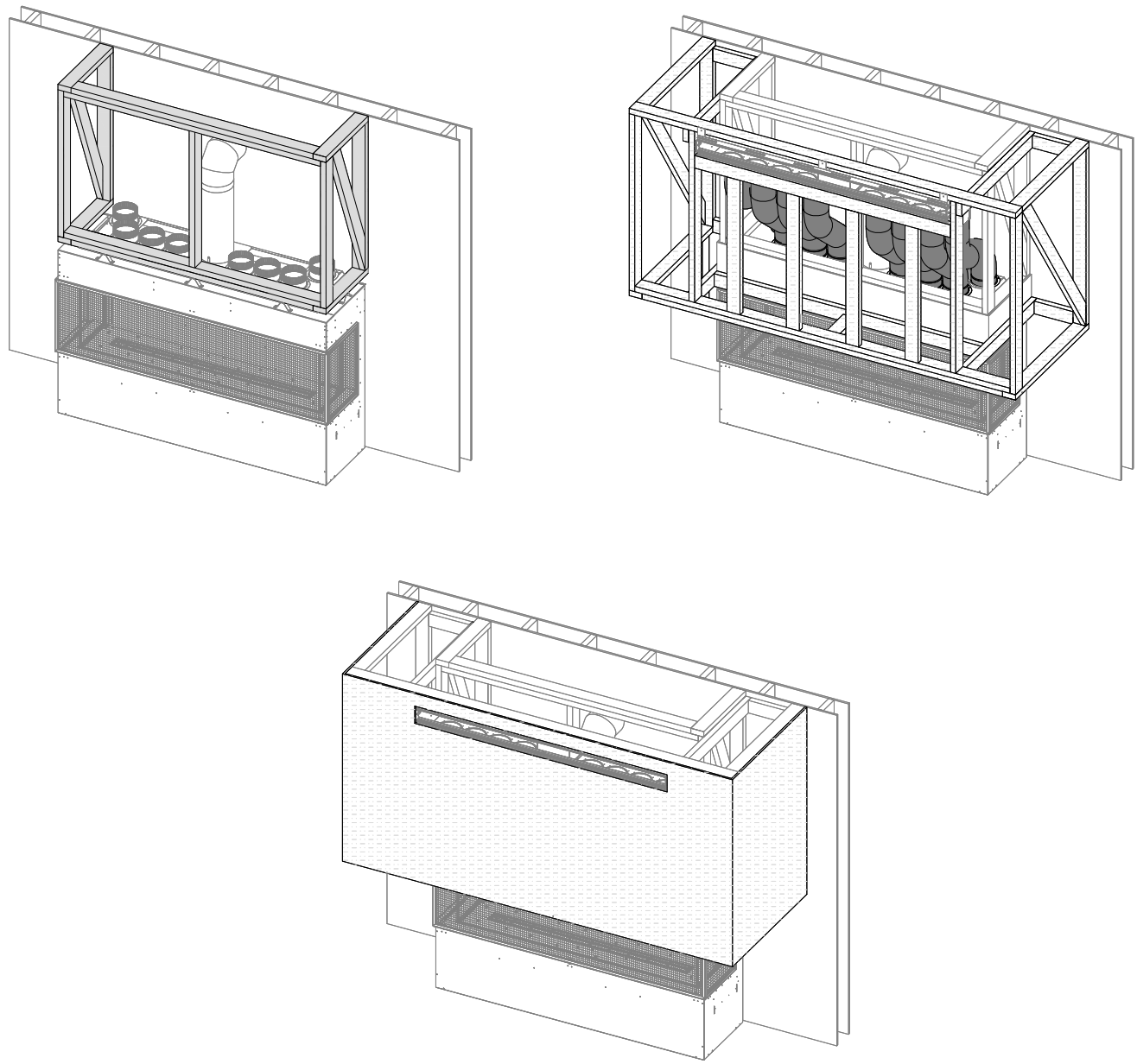

Figure 3.26 - Constructing a Chamber Projection with a KZK

3.5 Hearth, Mantel, Front Chamber, and Side Chamber Projection for Vented Cavity Options

NOTE: A maximum of 16” (406mm) total projection is allowed between the mantel and chamber projection (regardless if it is combustible, non-combustible, or a combination). An example would be if you installed a 10” (254mm) front non-combustible chamber projection then you would be allowed up to a 6” (152mm) mantel until you hit the limit of 16” (406mm).

3.5.1 Combustible Hearth and Mantel Requirements

WARNING: All minimum clearances to combustible material MUST be maintained.

- **Combustible Mantel Projections:** A maximum of a 6" (152mm) mantel can be installed at 2” (51mm) above the side and top finishing edge. Mantel projections can increase 1” (25mm) of depth for every 1” of height starting at the 6” (152mm) mantel. See Figure 3.27.
- **Combustible Chamber Projections**: Not allowed.
- **Combustible Hearth**: Combustible hearth can have an unlimited projection. Hearth can be raised flush to the bottom finishing edge. See Figure 3.27.

3.5.2 Non-combustible Mantel and Chamber Projection Requirements

- **Non-combustible Mantel Projections**: A maximum of a 16” (406mm) non-combustible mantel projection is allowed to start at 0” (0mm) front and side top finishing edges of the fireplace. See Figure 3.29.
- **Non-combustible Chamber Projection:** A maximum of a 16” (406mm) non-combustible chamber projection can be installed flush at the front and side top finishing edges of the fireplace. See Figure 3.29.

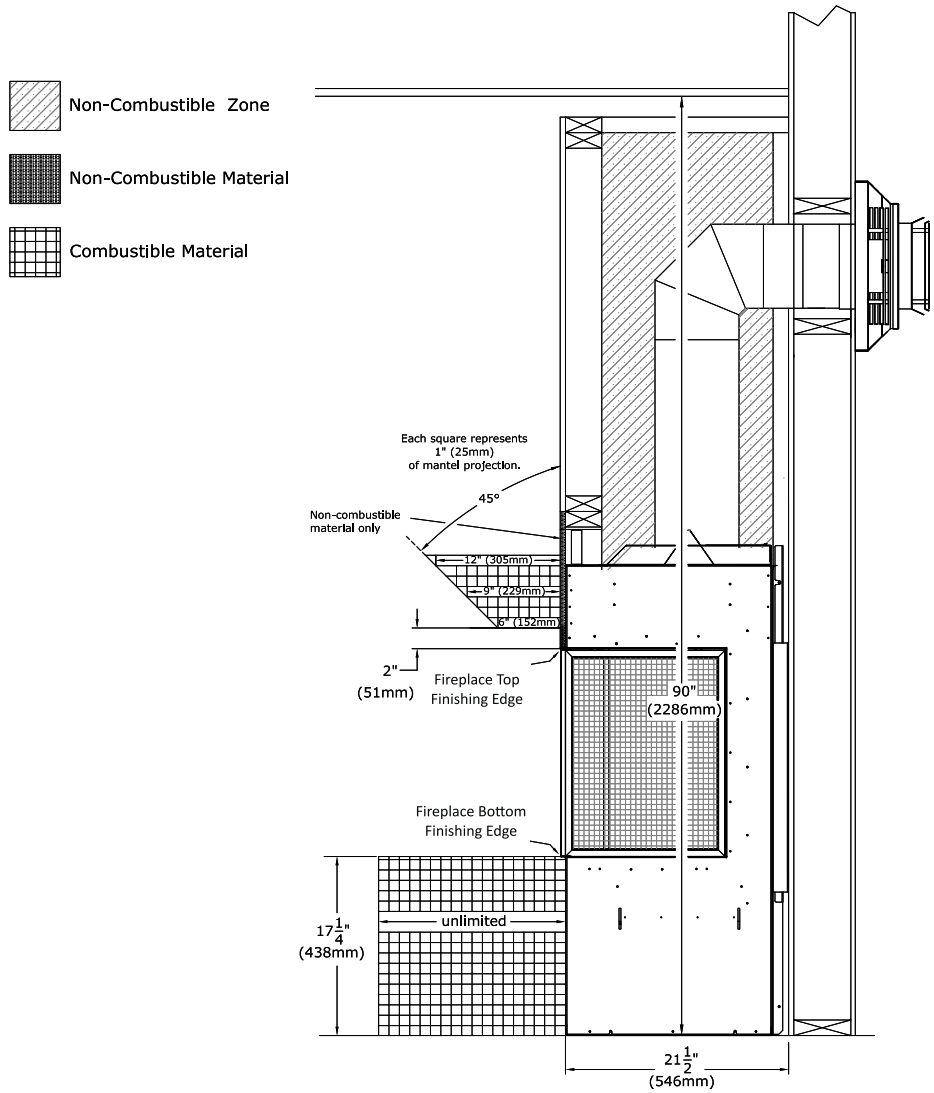

Figure 3.27 - Mantel and Hearth Projection

3.5 Hearth, Mantel, Front Chamber, and Side Chamber Projection for Vented Cavity Options (continued)

Figure 3.28 shows a non-combustible 16” (406mm) front chamber projection with a vented cavity. The heat release opening at the top of the fireplace chamber must maintain their opening dimensions for the option you have chosen throughout the entire fireplace chamber and projection. The non-combustible 16” (406mm) projection applies to a side chamber projection as well.

IMPORTANT: It is required to install facing material on the fireplace chamber before constructing the chamber projection. This is required to ensure the convective cooling process of the fireplace functions correctly. See Section 3.5.3 on how to construct the chamber projection. See Section 3.2 for minimum noncombustible facing material requirements.

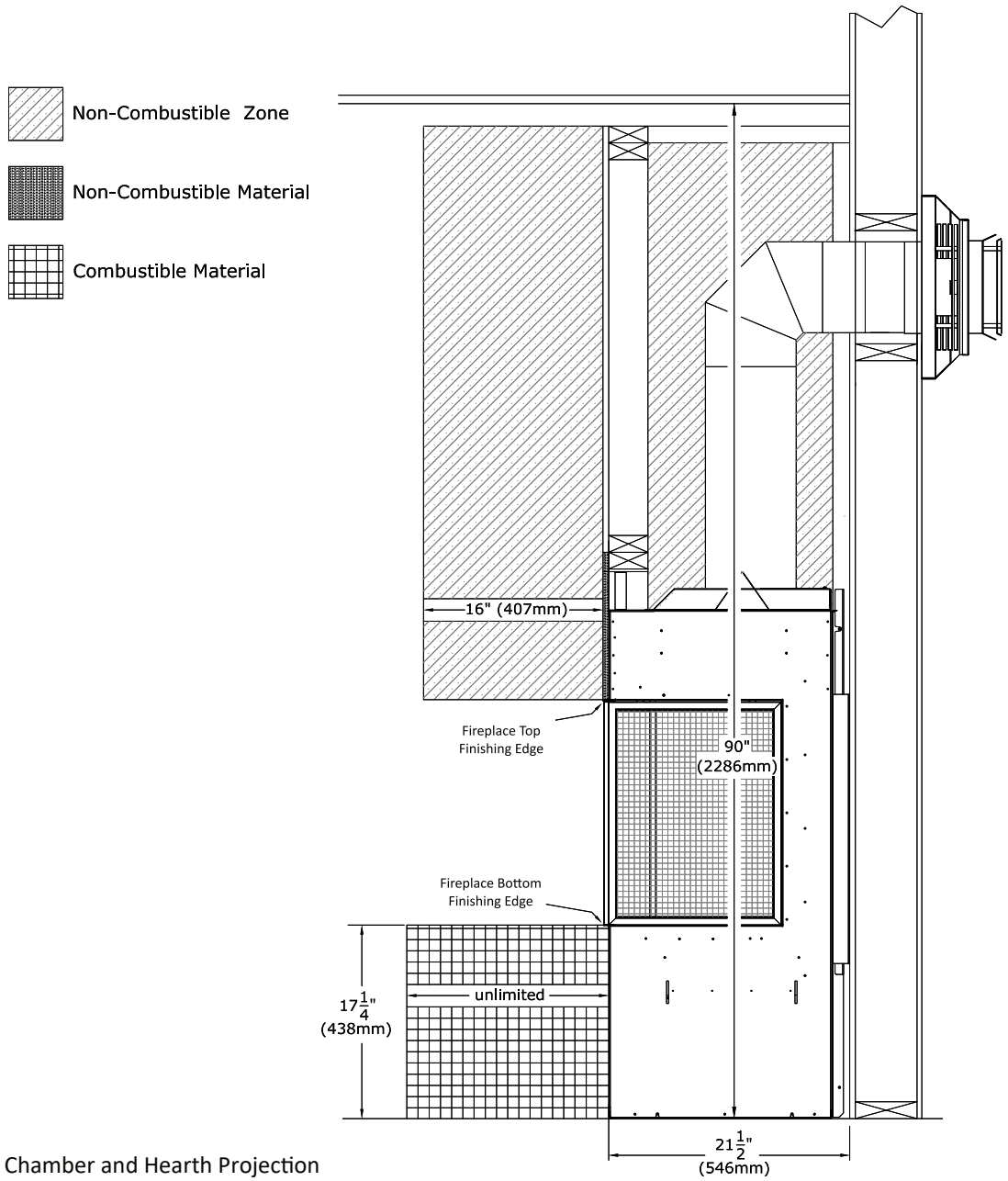

Figure 3.28 - Chamber and Hearth Projection

3.5 Hearth, Mantel, Front Chamber, and Side Chamber Projection for Vented Cavity Options (continued)

The image below shows the non-combustible 16” (406mm) front and side projection with an unlimited combustible hearth.

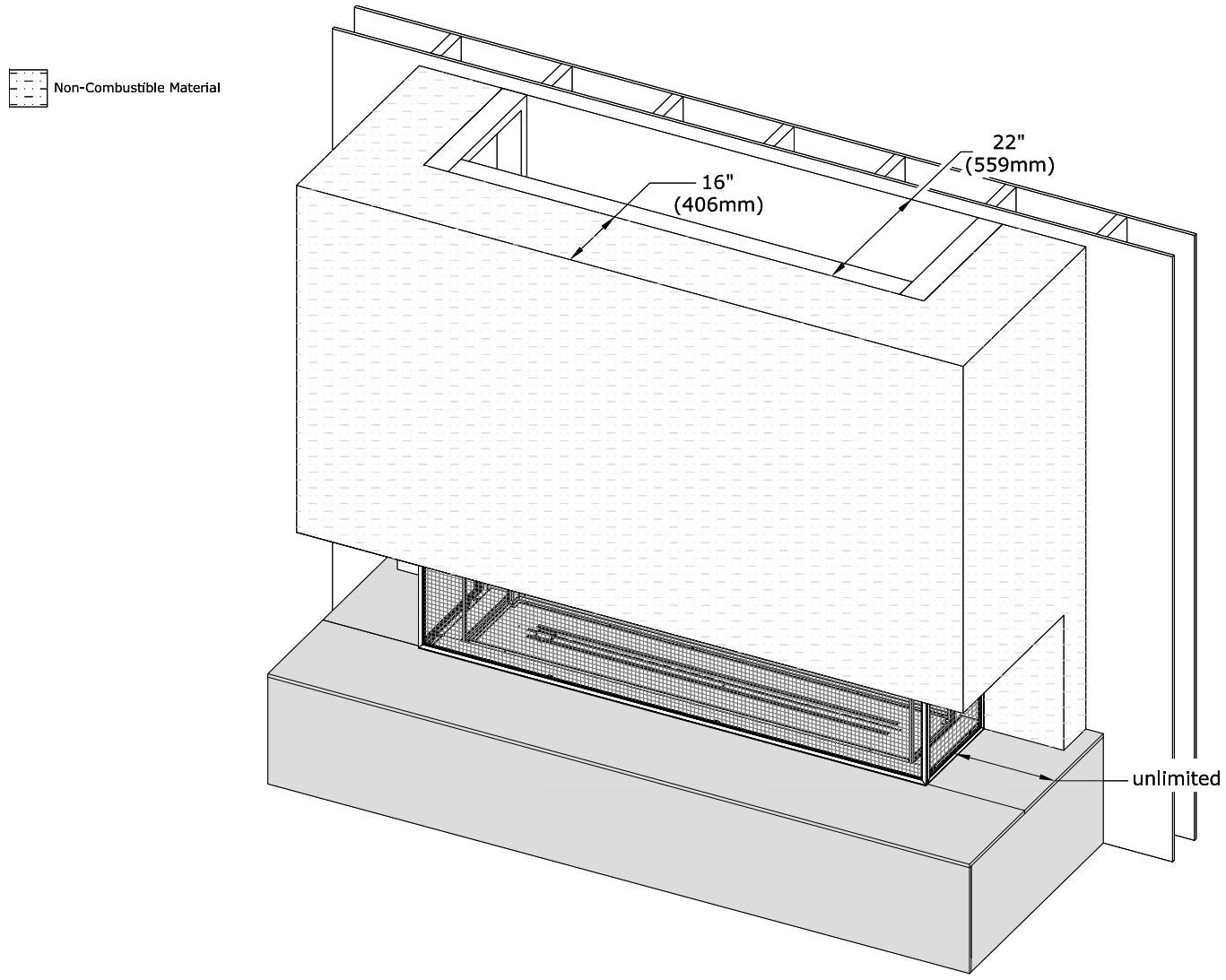

Figure 3.29 - Front and Side Projection

3.5.3 How to Construct a Chamber Projection with a Vented Cavity

This section is an overview of the steps in constructing a chamber projection when using a Vented Cavity. Figures 3.30 and 3.31 show a vented cavity that is open to all three sides of the chamber. You are required to construct the fireplace chamber and then install facing material first to ensure the convective cooling process of air entering the fireplace chamber through the fireplace screen and discharging at the top of the chamber via the opening option you have chosen. The convective cooling process of the fireplace chamber is essential.

- Frame out the chamber above the fireplace. Install all the facing material across the entire fireplace chamber which will seal the fireplace chamber from the projection. Pay attention to the required non-combustible facing material as required in Section 3.2.
- Next frame out the projection and ensure the vented cavity air opening maintains their required opening dimensions. Lastly install the non-combustible facing material and finishing material on the projection. The entire chamber projection must be constructed out of non-combustible material. The minimum dimensions of the heat release openings that you choose are required to be maintained in the initial fireplace chamber and throughout the projection.

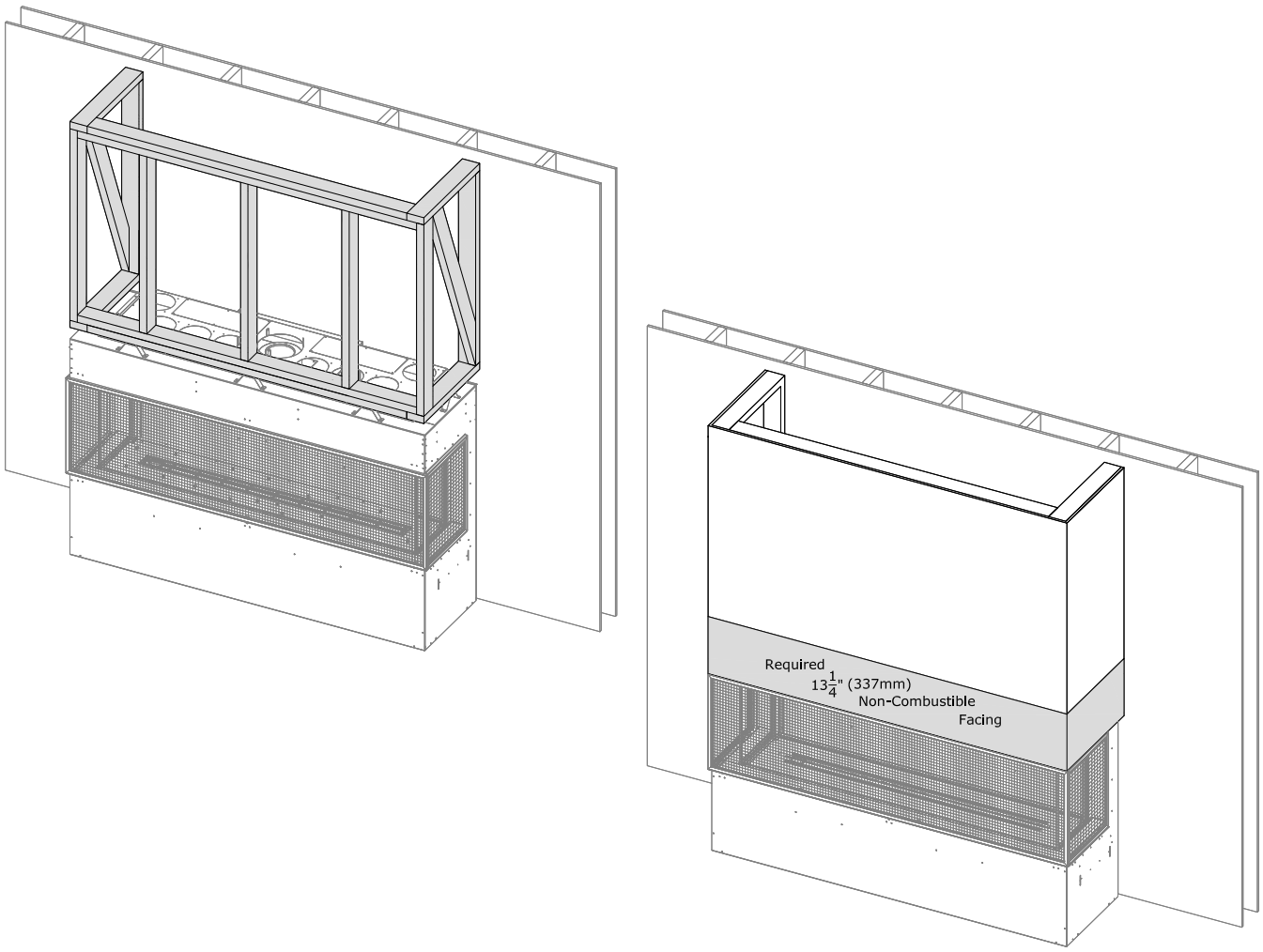

Figure 3.30 - Constructing a Chamber Projection with a Vented Cavity

3.5.3 How to Construct a Chamber Projection with a Vented Cavity (continued)

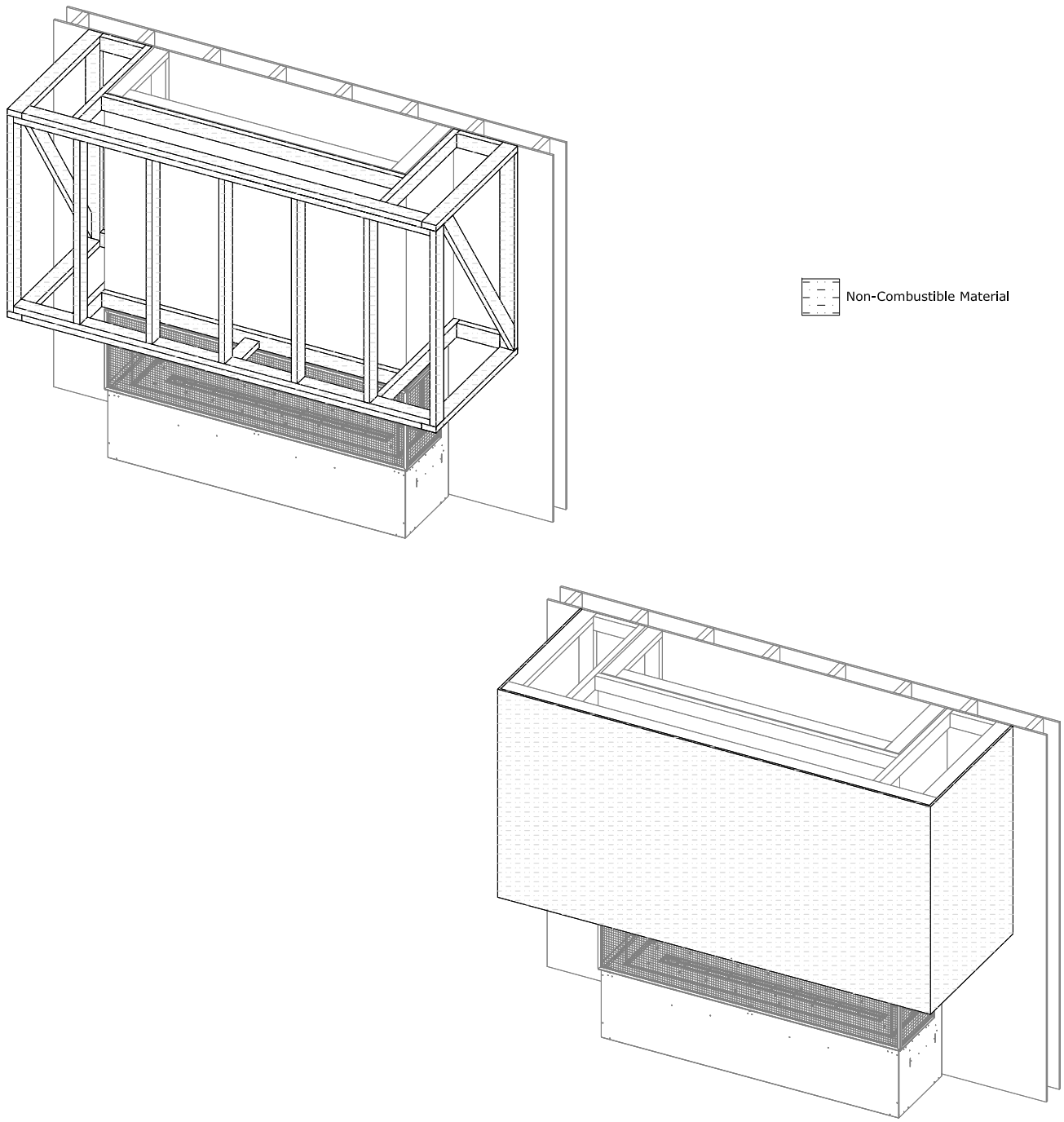

Figure 3.31 - Constructing a Chamber Projection with a Vented Cavity

3.6 Clearance to a Sidewall

The sidewall clearance is taken from the fireplace side finishing edge. The minimum clearance of 16” (406mm) applies to all Vented Cavity and KZK options.

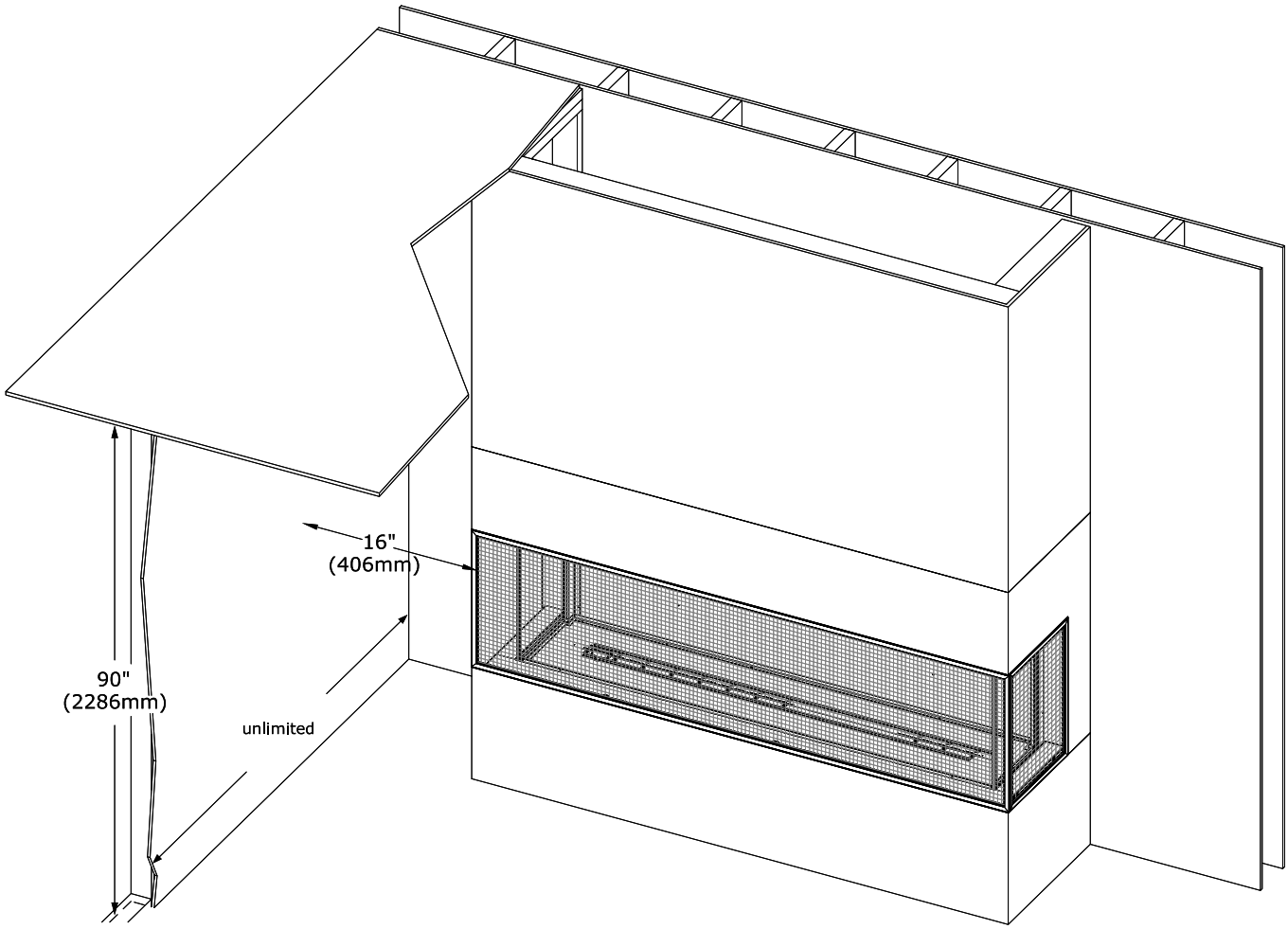

Figure 3.32 - Clearance to Sidewall

3.6 Clearance to a Sidewall (continued)

The image below shows the minimum dimensions for a side vented cavity or side KZK installation for the sidewall clearance or where you want a pocket. An example would be if you have shelving / built-ins on the sides.

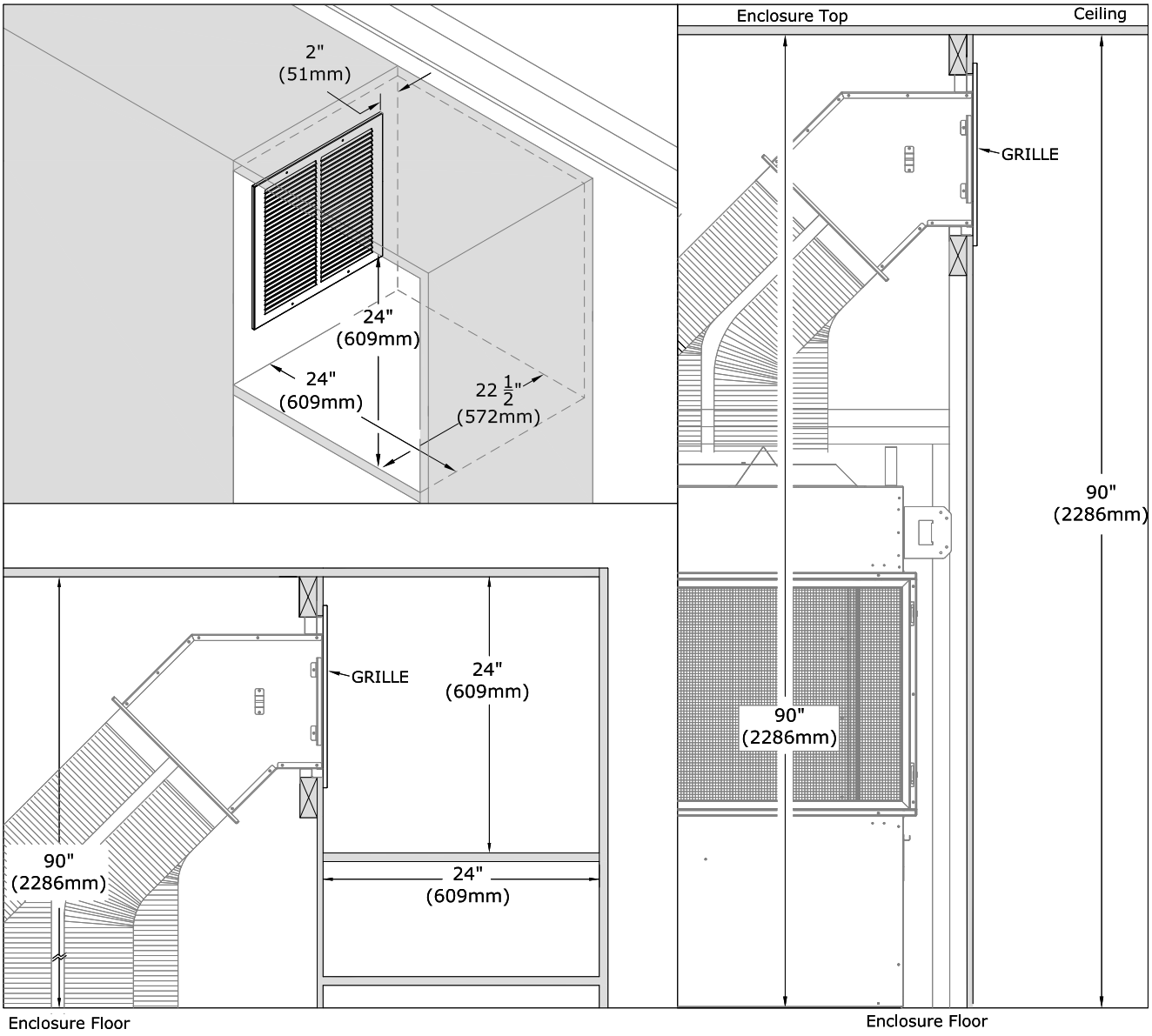

Figure 3.33 - Side KZK with Shelf Enclosure

4.0 Fireplace Setup

4.1 Safety Screen Barriers

WARNING: Do not operate this fireplace with the safety screens removed, or broken. Replacement of the safety screen assembly, should be done by a licensed or qualified service person. If the safety screen barrier becomes damaged, it shall be replaced with the manufacturer's safety screen barrier for this appliance.

A safety screen barrier designed to reduce the risk of burns from the hot viewing glass is provided with this appliance and shall be installed for the protection of children and other at-risk individuals.

4.1.1 Removing the Safety Screen Assembly

1. Provided with the fireplace is a tool that allows you to remove the safety screen. There is a small hole on the bottom side at the top left corner of the screen. Place the tool in the hole and pull the screen away from the magnets.

Note: The front screen can be rotated 180° so the small hole is located in the bottom right corner. The tool hole will be either in the top left or bottom right corner.

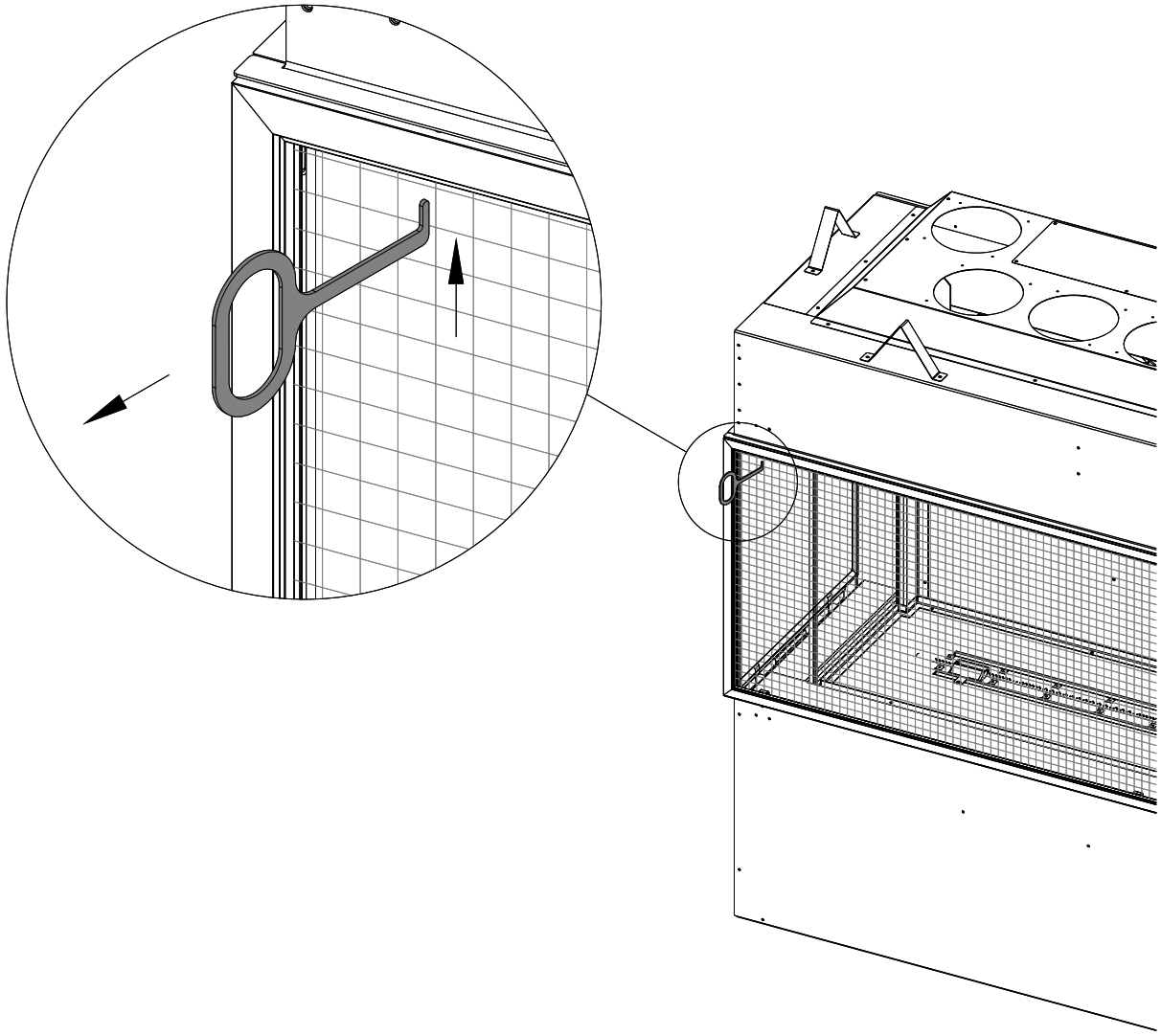

Figure 4.1 - Safety Screen Removal

4.1.1 Removing The Safety Screen Assembly (continued)

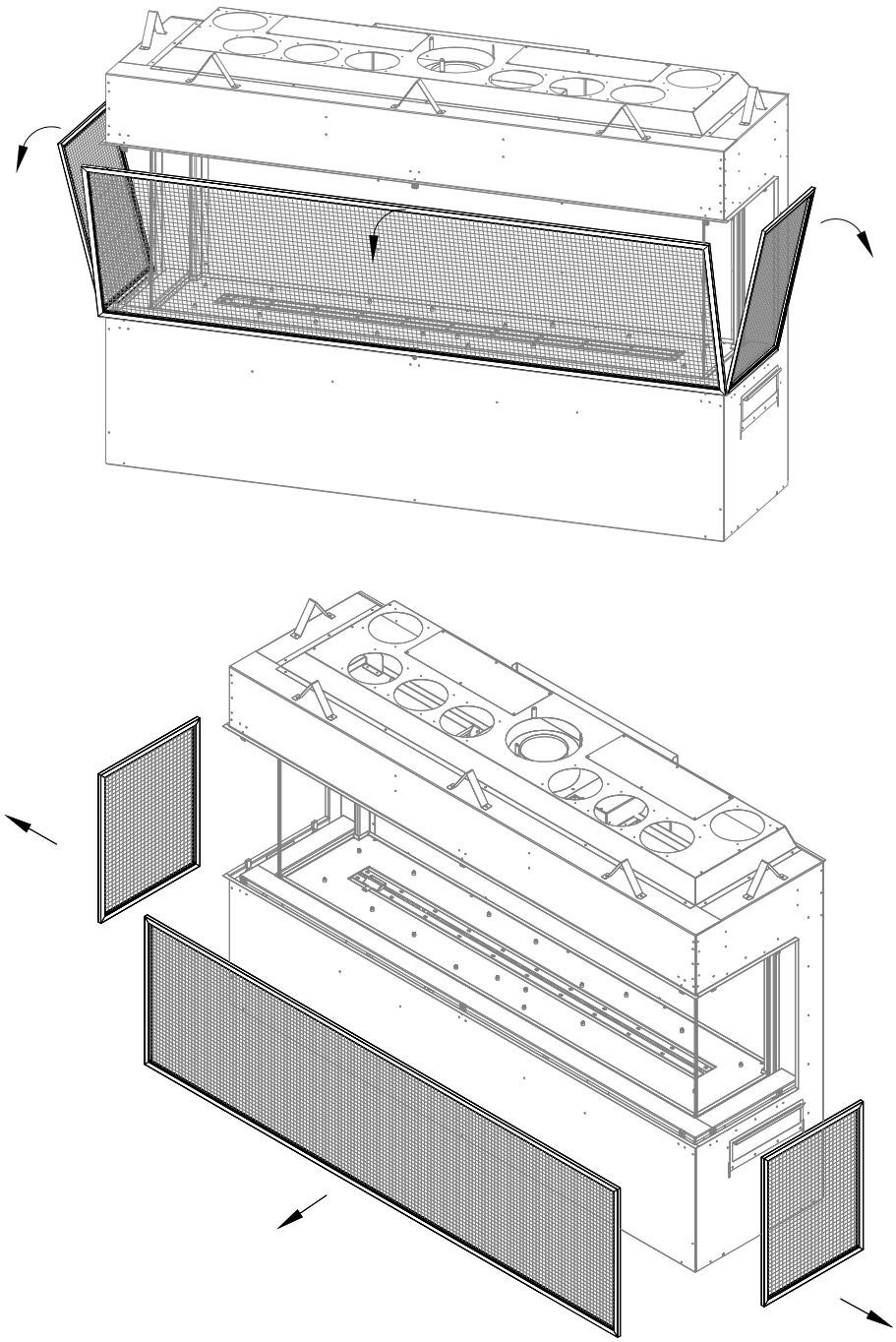

Figure 4.2 - Safety Screen Removal

4.2 Perimeter Media Tray

You will need to remove the perimeter media tray to access any of the components of the fireplace or to remove the firebox glass.

Removal Instructions:

1. After the front safety screen is removed locate the (2) sheet metal screws that secure each side media tray and the front media tray. See Figure 4.3. Ensure the media trays are pushed up against the firebox glass so there is a gap between the media tray and screen / outside edge of the fireplace.

Note: The perimeter media tray can be installed one of two ways.

- It can be installed where the flanges face up. This provides a channel where crushed glass or lava rock can be installed so the media from inside the firebox can extend until the edge of the screen.
- It can be installed where the flanges face down. This provides a smooth black finish for a clean (no media) look between the firebox glass and safety screen.

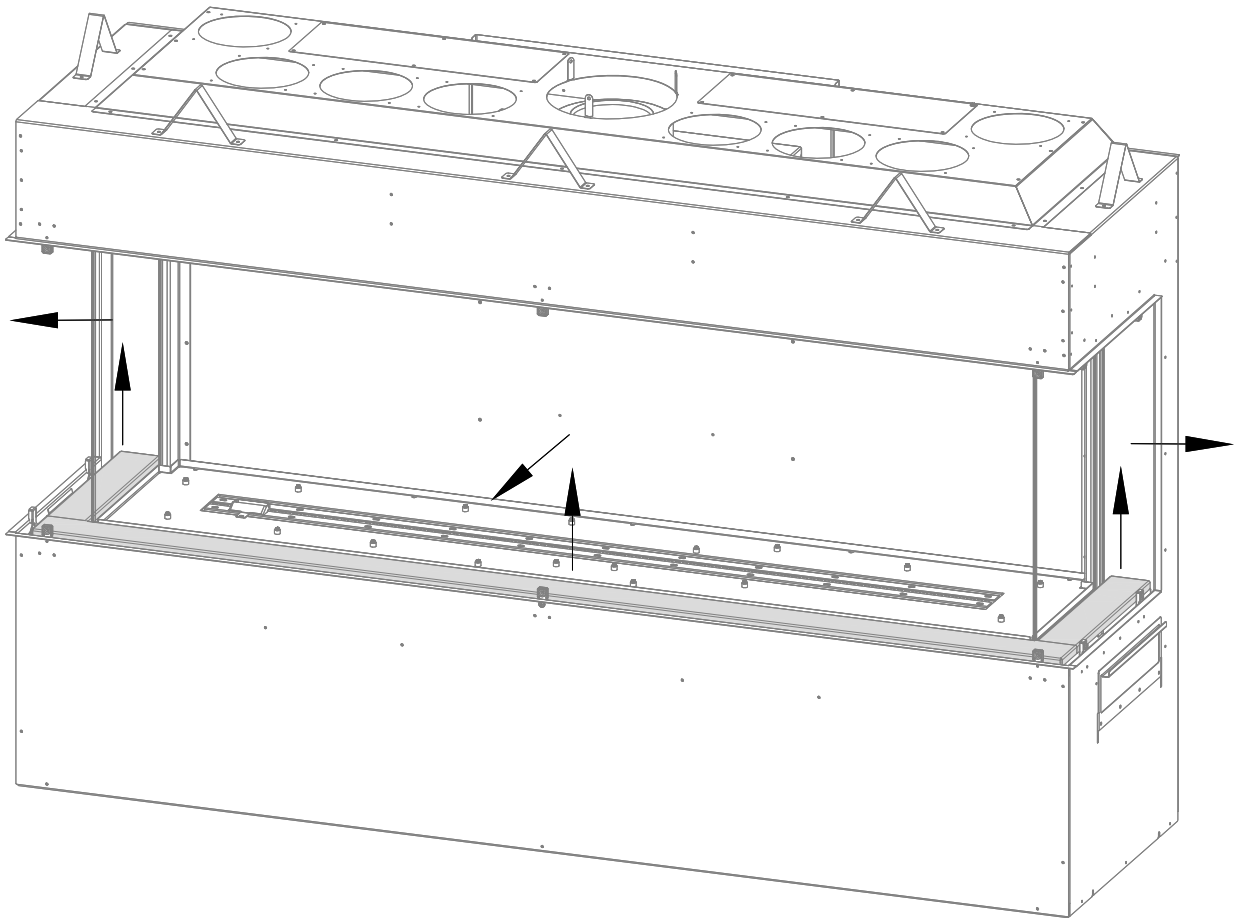

Figure 4.3 - Removing Perimeter Media Tray

4.3 Firebox Glass

WARNING: Do not operate this fireplace with the glass removed, cracked, or broken. Replacement of the glass assembly should be done by a licensed or qualified service person. If a glass assembly becomes damaged, it shall be replaced with the manufacturer's glass assembly for this appliance.

The firebox glass for this fireplace is ceramic glass.

The firebox glass provides a sealed system for the fireplace. This consists of the firebox glass and the silicone corner gasket.

4.3.1 Removing The Firebox Glass

WARNING: Do not remove the glass assembly when hot.

1. Remove the perimeter media tray by lifting it up and out of the slot it is installed. See Figure 4.3.
2. Start with the front glass. Attach suction cups to the front firebox glass.
3. Remove the 7/16" nuts that secure the upper glass bracket and remove this bracket for the front glass as shown in Figure 4.5. Save this bracket to reinstall the glass.
4. Loosen the 7/16" nuts that secure the lower glass brackets as shown in Figure 4.5. You do not need to remove these brackets.
5. Start by lifting the front piece of glass as shown in Figure 4.4 to remove the front firebox glass.

Note: You may need to peel away the small amount of silicone that is at the top and bottom corners of where the front and side pieces of glass meet. The silicone sealing strips should stay attached to the side pieces of glass when removing the front glass pane.

6. Next remove the upper glass brackets and loosen the lower glass brackets for the side firebox glass pieces. For corner installations you will need to remove the glass pane on the side that was not converted to the corner by hand as a suction cup will not fit on the side. The side of the fireplace that you converted to the corner viewing area will now allow greater access where you can use the suction cup. If you are installing this fireplace as a 3-sided (Bay) installation you will have access to use the suction cups on both firebox side glass panes. To remove the side firebox glass follow the steps outlined above for the front glass removal.

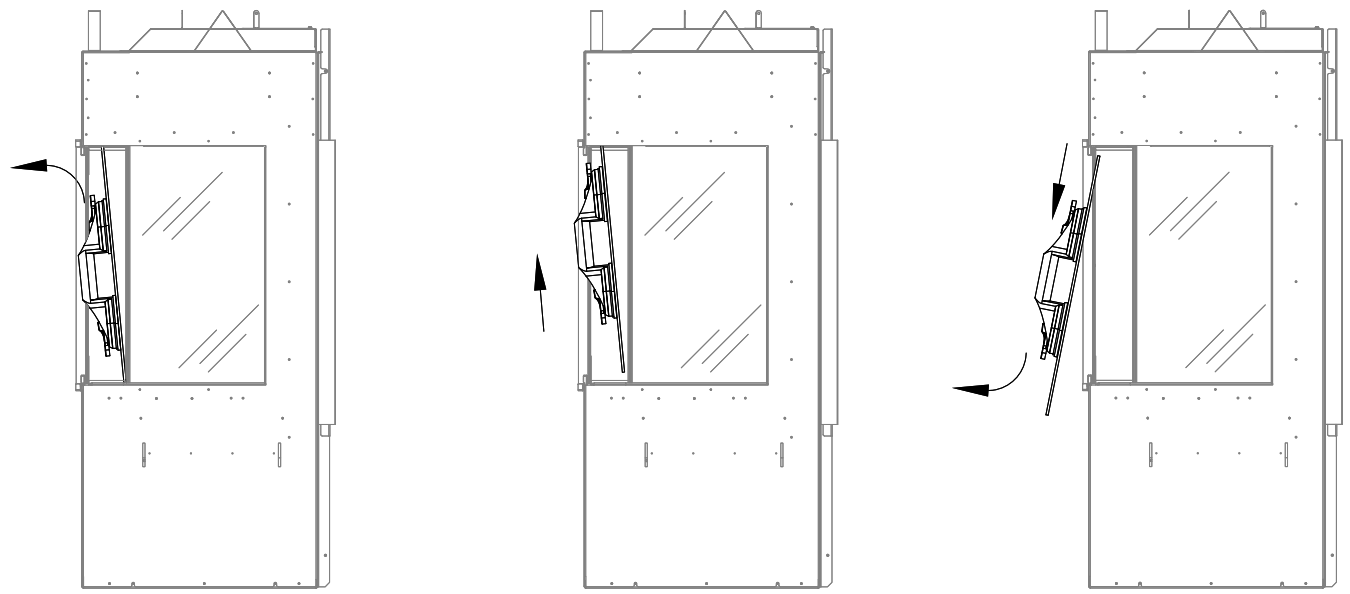

Figure 4.4 - Firebox Glass Removal

4.3.1 Removing The Firebox Glass (continued)

Upper Glass Brackets

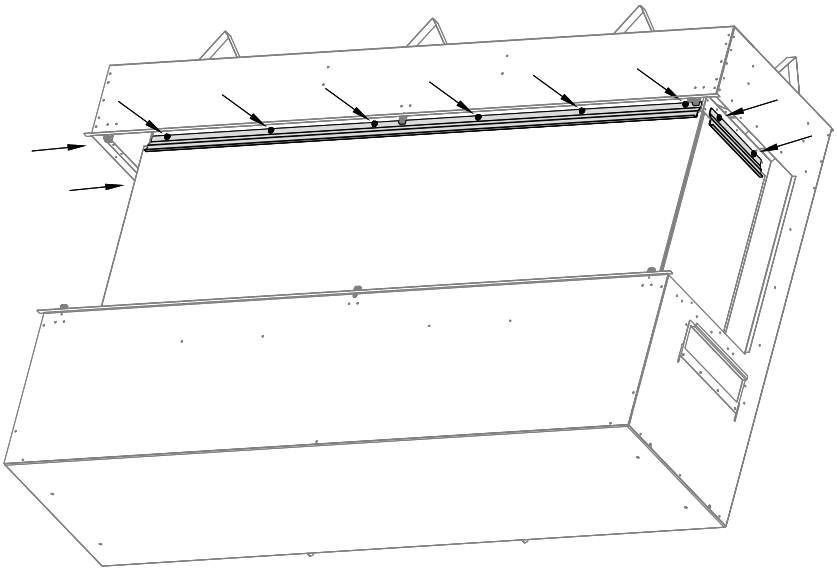

Lower Glass Brackets

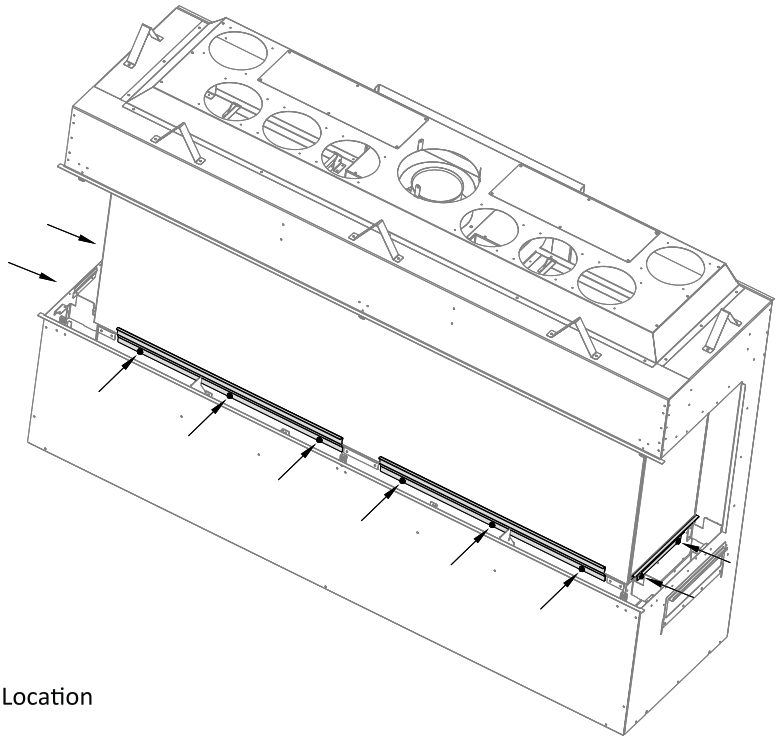

Figure 4.5 - Glass Bracket Location

4.3.2 Installing The Firebox Glass

1. Start with installing one of the side glass pieces first. Ensure the silicone sealing strips are installed. Have the lower glass brackets already installed with the nuts loose. Install the side firebox glass into place. Install the glass to the firebox by securing the upper glass bracket with the 7/16” nuts. Tighten the lower glass brackets now.

   For corner installation you will have to install the side firebox glass pane by hand on the side that still has the block off plate installed. On the side that you converted to the view-able corner you can use the suction cup. On a 3-sided installation you will have access to use the suction cup on both side firebox glass panes.

2. Install the front piece of glass. When installing the front piece of glass you may find it helpful to start with the bottom glass brackets installed but left loose. As you lift the glass into place (See Figure 4.7) start with the glass sightly offset to the side of the firebox that does not have the side glass installed yet. You are able to slide the front glass sideways into the silicone sealing strip of previously installed side firebox glass.

   Use your finger to push the silicone strip securely into the edge of the front glass. See Figure 4.6 for a top-down view of how the front glass is sealed inside the silicone channel. Secure the front glass by installing the top glass bracket and secure both the top and bottom bracket.

3. Now you can install the remaining side firebox glass. At the opposite side you can use your finger or a small tool to peel open the edge of the silicone strip as you press the side firebox glass up against the front glass. Ensure the glass is seated into the channel on both sides.

4. Secure the remaining side firebox glass bracket with the 7/16” nuts. Tighten all the 7/16” nuts that secure the upper and lower glass brackets as shown in Figure 4.5.

5. Apply high temperature silicone to the top and bottom corners of where the front and side firebox glass pieces meet. See Figure 4.8.

6 Reinstall the perimeter media tray.

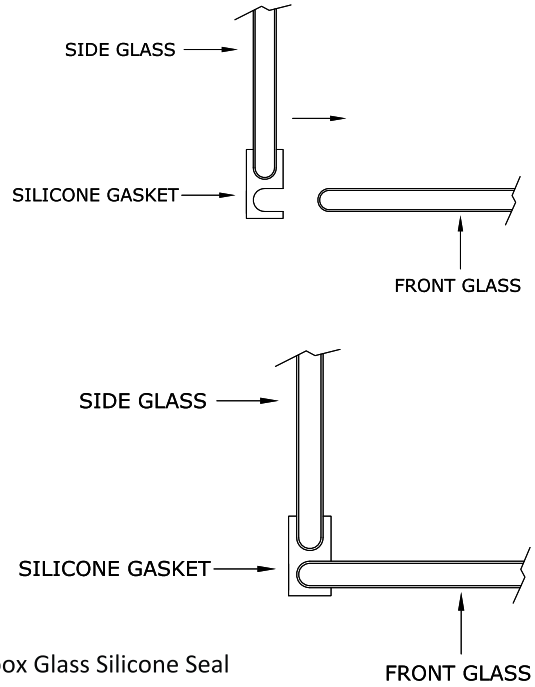

Figure 4.6 - Firebox Glass Silicone Seal

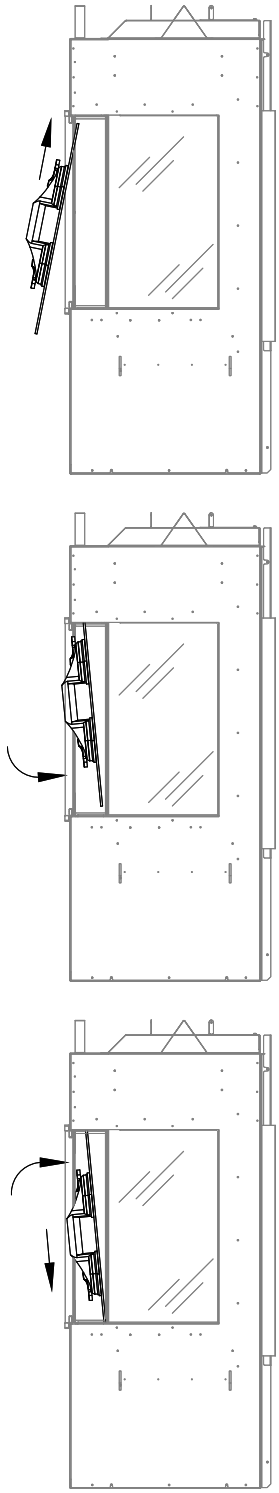

Figure 4.7 - Firebox Glass Installation

4.3.2 Installing The Firebox Glass (continued)

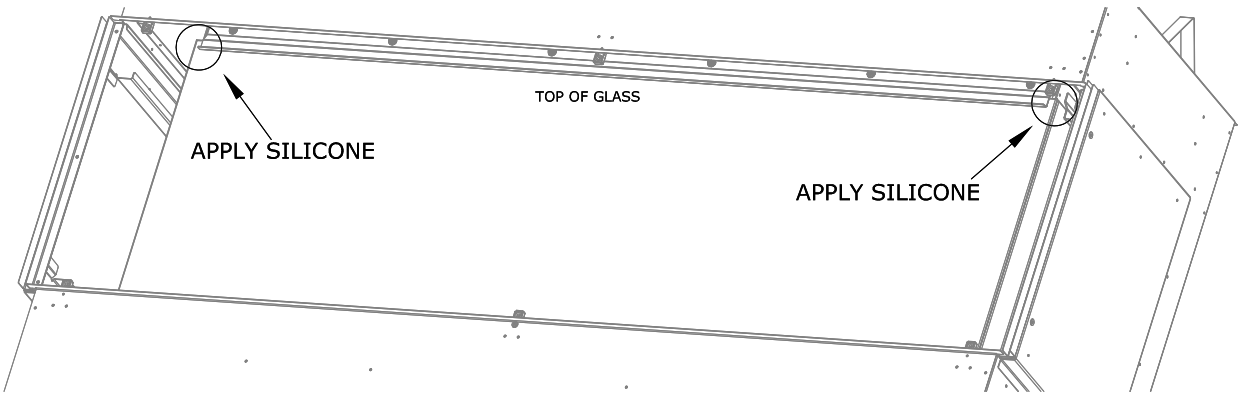

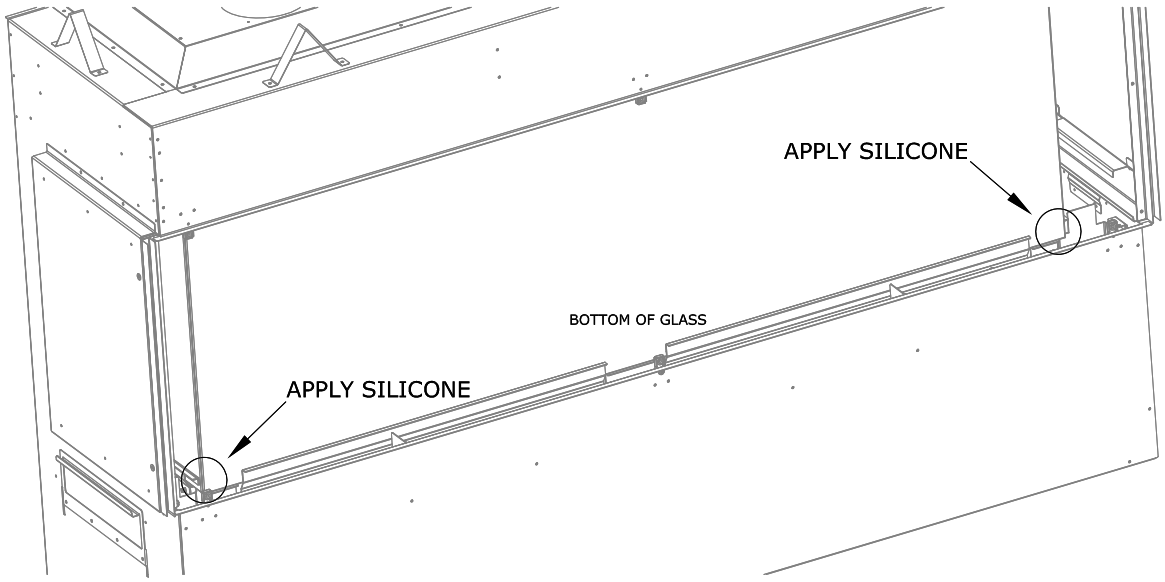

Figure 4.8 - Firebox Glass Corner Silicone Seal

4.4 Control Board Removal and Installation

WARNING: If burner and/or pilot have been burning, use appropriate protection to avoid burns or damage to personal property before removing any components.

DO NOT OPERATE THIS APPLIANCE WITHOUT THE SEALING GASKET (LOCATED UNDER THE CONTROL BOARD) IN PLACE. IF GASKETING IS DAMAGED, IT MUST BE REPLACED.

CAUTION: Check all connections for leaks with soapy water, whether field or factory made.

4.4.1 Control Board Removal

1. First locate the main shut-off valve upstream of the appliance connector and close the valve. Then disconnect the electrical power of the fireplace. Figure 4.9.
2. Remove the safety screen barriers, perimeter media tray, firebox glass, and crushed media. You may find it beneficial to remove the lower glass brackets for increased accessibility. Figure 4.10, 4.11, and 4.12.
3. Remove the (2) sheet metal screws that secure the switch panel. Lift this panel off its support bracket and locate the slits in the control module brackets. Slide the switch panel into these openings to secure it during control board removal. Figure 4.13 and 4.14.
4. Remove all the sheet metal screws around the perimeter of the burner media tray and all sheet metal screws along the center of the burner. Remove the burner media tray and burner tube. Figure 4.15.
5. Remove the (24) sheet metal screws securing the control board to the bottom of the firebox. Figure 4.17.
6. Start by locating the two lifting handles (Figure 4.16) near the center of the control board. When pulling the control board up and out you will have to tilt the control board towards you so the valve and module pivot into the opening. Lift the control board up to gain access to under the control board. Figure 4.17.
7. Make sure gas supply is turned off. Lean over the tilted control board and disconnect the gas line flex tube. This gas line flex tube goes from the fireplace gas valve to the supply gas line entering the fireplace.
8. Disconnect both top light kit leads from the wire harness on the IFC control module.
9. Remove the control board.

4.4.2 Control Board Installation

- Install the control board and all previously removed components in reverse order.
- When installing the control board make sure you are aligning the holes in the control board with the holes in the firebox bottom. VERIFY SEALING GASKET IS IN PLACE.

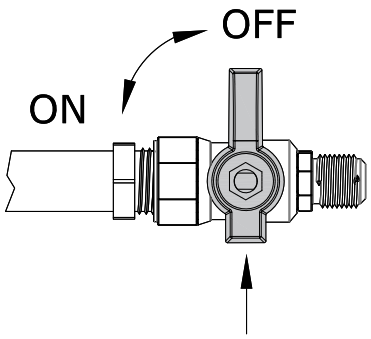

Figure 4.9 - Turn Off Gas

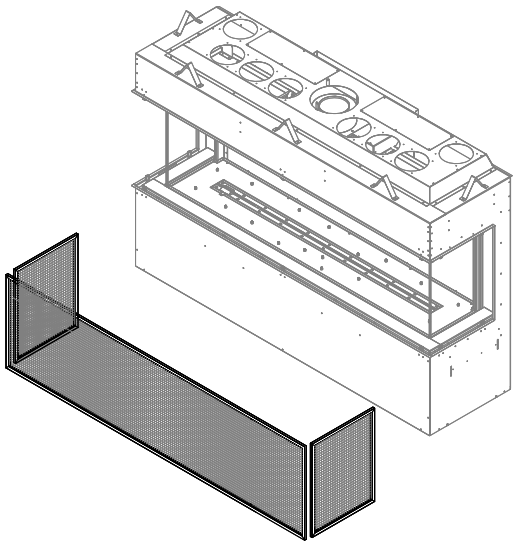

Figure 4.10 - Safety Screen Barrier Removal

4.4 Control Board Removal and Installation (continued)

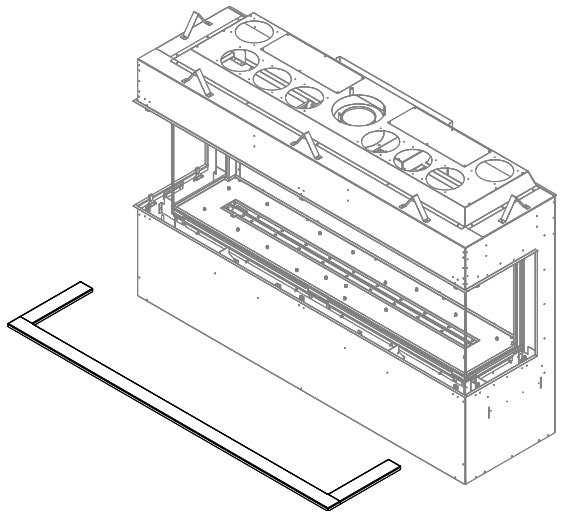

Figure 4.11 - Remove Perimeter Media Tray

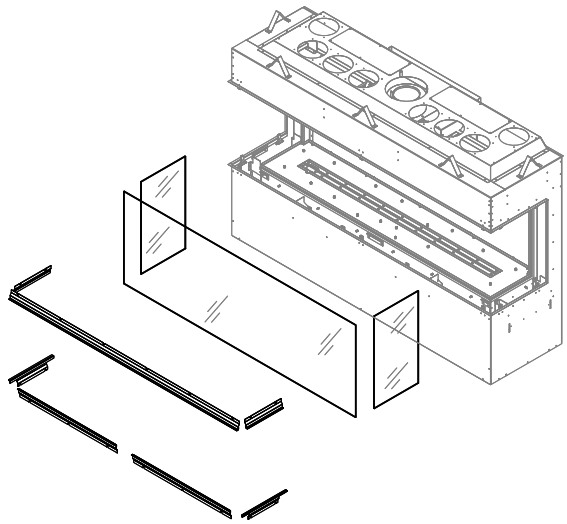

Figure 4.12 - Remove Firebox Glass

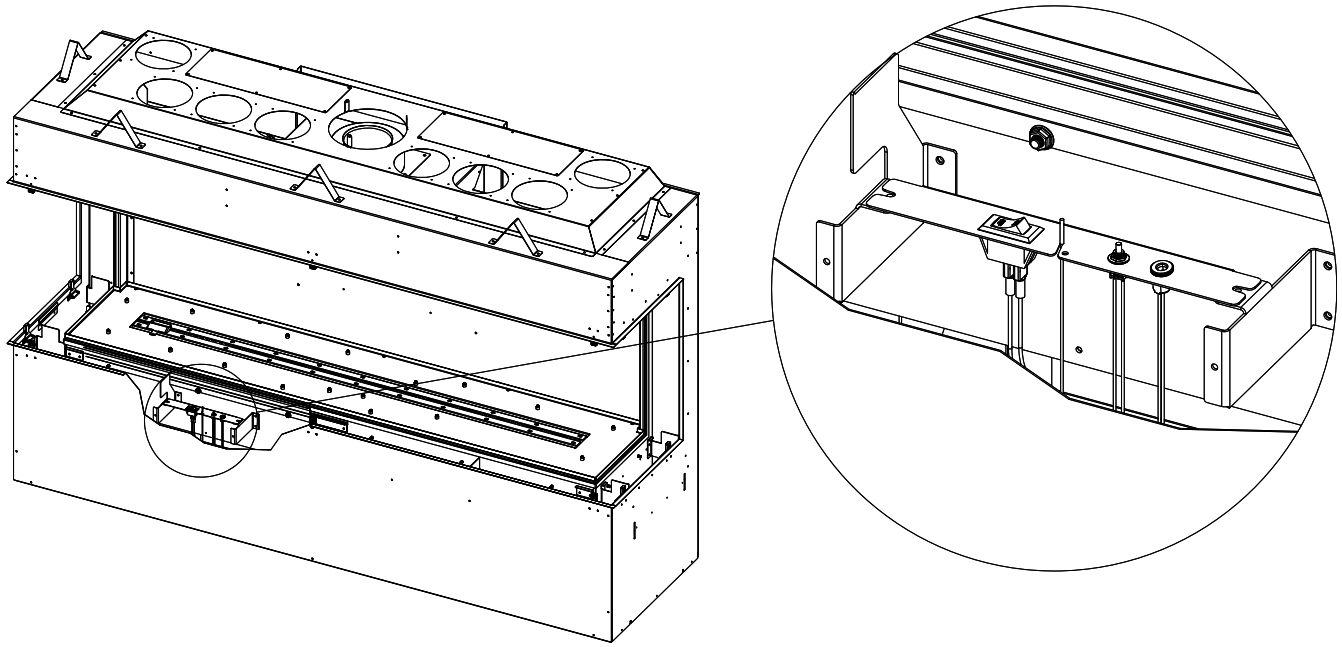

Figure 4.13 - Switch Panel Removal

4.4 Control Board Removal and Installation (continued)

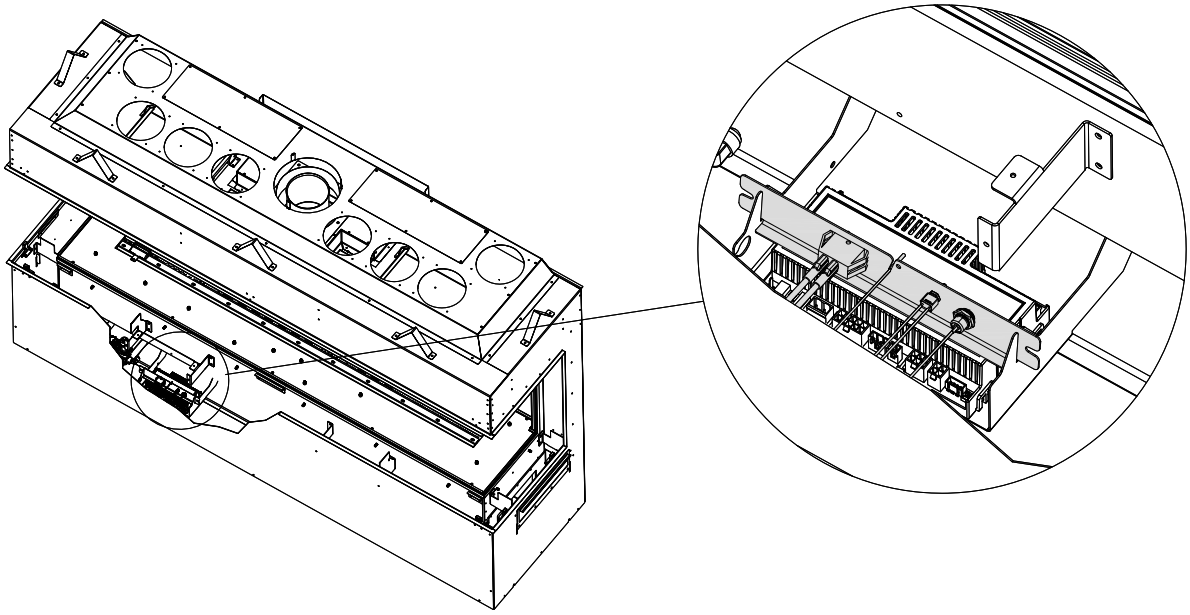

Figure 4.14 - Switch Panel Storage

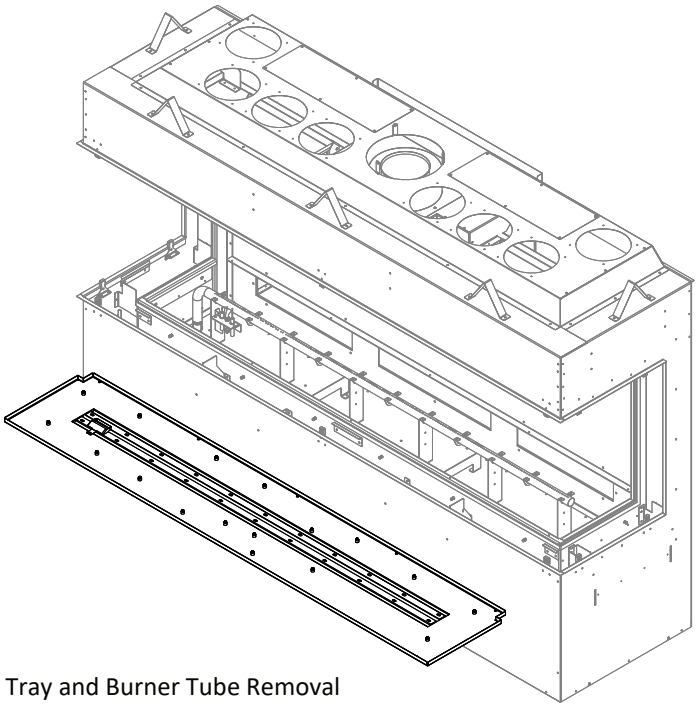

Figure 4.15 - Burner Media Tray and Burner Tube Removal

4.4 Control Board Removal and Installation (continued)

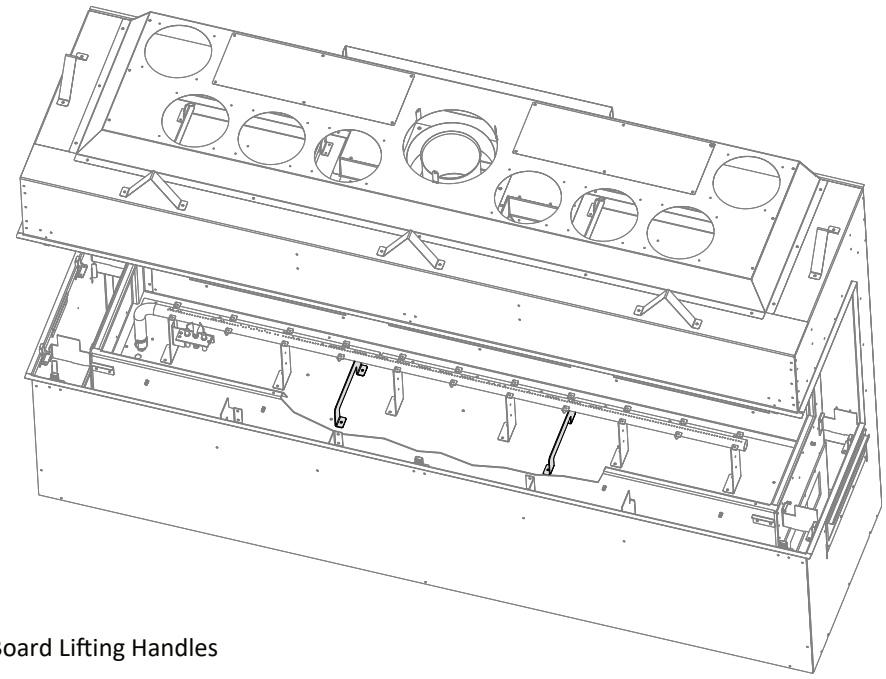

Figure 4.16 - Control Board Lifting Handles

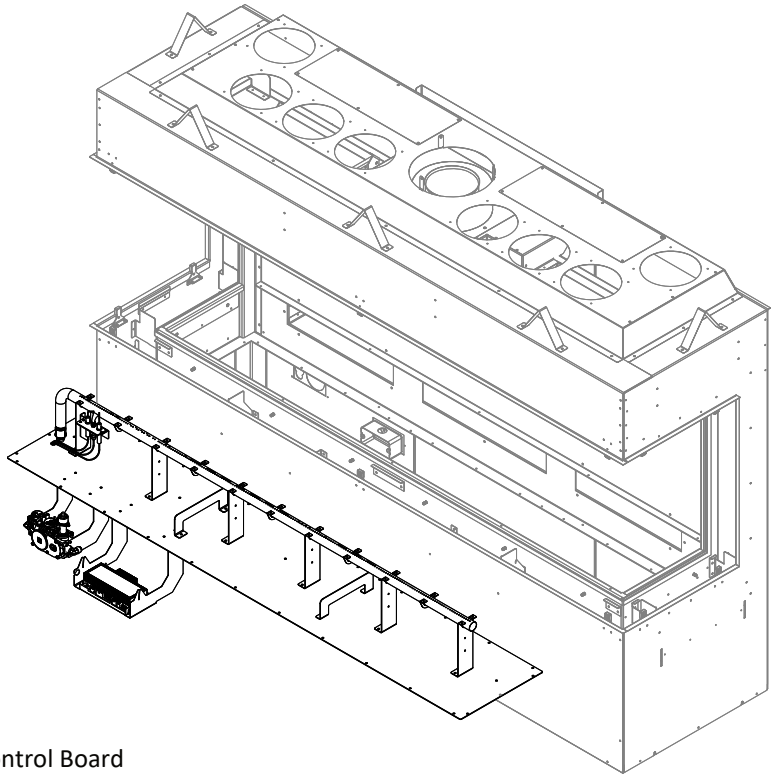

Figure 4.17 - Remove Control Board

5.0 Replacement Parts List

HUSSONG MANUFACTURING CO., INC.
P.O. Box 557, 204 Industrial Park Road
Lakefield, Minnesota USA 56150-0577

Replacement parts are available through your local dealer. Contact your local dealer for availability and pricing. The following warning is for replacement parts for this appliance.

⚠ WARNING: This product can expose you to chemicals including Lead, which is [are] known to the State of California to cause cancer, birth defects or other reproductive harm. For more information, visit www.P65Warnings.ca.gov.

Control Board and Parts				
S.I.T. Complete Board Assembly - Natural Gas	G7220S-150		IPI Pilot Assembly - Natural Gas	900-064A
S.I.T. Complete Board Assembly - Propane	G7220S-151		IPI Pilot Assembly - Propane	900-064-1
S.I.T. IPI Gas Valve - Natural Gas	700-567		Pilot Orifice - Natural Gas - #.023NG	700-123
S.I.T. IPI Gas Valve - Propane	700-567-1		Pilot Orifice - Propane - #.014LP	700-114
Main Power Wire Harness	700-350A		PSE Conversion Kit - Natural Gas	NCK-G7220-P50
Proflame 2 IFC Module	700-652		PSE Conversion Kit - Propane	LCK-G7220-P50
SIT Wire Harness Assembly	700-653		Natural Gas - Valve Stepper Motor	700-504
Fan / Light Kit Wire Harness	700-657		Propane - Valve Stepper Motor	700-504-1
ON/OFF Wire Harness	700-656		Burner Orifice - #23 - Natural Gas	700-2223
Ember Bed AUX Harness	800-AUX		Burner Orifice - #2.20mm - Propane	700-220M
36” Black 3/8” Gas Line (into valve)	700-383B		Burner Tube	G7220-350
32” Flare x Brazed Fitting	700-232F		Battery Backup Extension	700-424
S.I.T. Transmitter (Remote Control)	700-408		6V to Barrel Jack Adapter	700-423
Remote Learn Button	700-422		Remote Antenna Extension	700-ANT

Glass and Glass Parts	
Firebox Glass - Front	G7220-FGF
Firebox Glass - Side	G6020-FGS
Firebox Glass Gasket (attaches to firebox) - 30’	500-426
Front Firebox Glass Brackets	G7220-FFB
Side Firebox Glass Brackets	G6020-SFB
Firebox Silicone Strips Clear (seals side and front firebox glass panes)	700-20C
Firebox Silicone Strips Black (seals side and front firebox glass panes)	700-20B

Safety Screens	
Front Safety Screen Barrier	G7220S-ES
Side Safety Screen Barrier (Left or Right side)	G6020S-ES2

Top Light Kit	
20W Halogen Bulb	600-676
Light Kit - Top	600-TLK

Corner Conversion Kit*	
Screen Corner Conversion Kit	GENLS-CCK
*Order one kit for left or right corner installation and order two kits for 3-sided “Bay” Installation	

Log Set Replacement Parts		
	Weather Log Set	Birch Log Set
11 Piece Log Set	GENL-500	GENL-B501
Log #1	GENL-1	GENL-B1
Log #2	GENL-2	GENL-B2
Log #3	GENL-3	GENL-B3
Log #4	GENL-4	GENL-B4
Log #5	GENL-5	GENL-B5
Log #6	GENL-6	GENL-B6
Log #7	GENL-7	GENL-B7
Log #8	GENL-8	GENL-B8
Log #9	GENL-9	GENL-B9
Log #10	GENL-10	GENL-B10
Log #11	GENL-11	GENL-B11

Additional Components	
3/4" Ice Crushed Glass - 35 lbs	435-ICE
1/2" Lava Rock - 15 lbs	600-715
5” (127mm) Restrictor Plate	900-086
Manual 3/8” Gas Shut-off Valve	700-380