KOZY HEAT
FIREPLACES
HUSSONG MANUFACTURING CO., INC.

INSTALLATION AND OPERATION MANUAL

BIRCHWOOD-20-LE
BIRCHWOOD-20-MV

Models #BIR-20-LE & #BIR-20-MV
Direct Vent Gas Stove

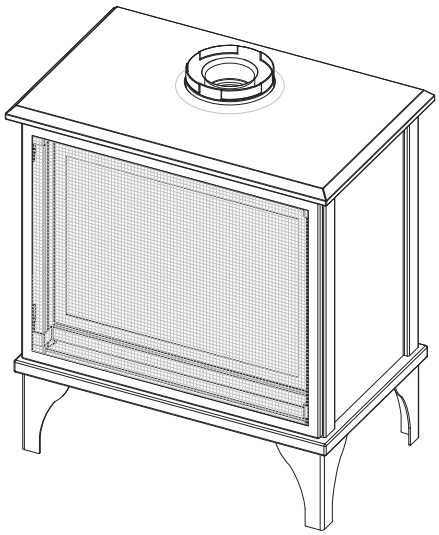

English and French installation manuals are available through your local dealer. Visit our website *www.kozyheat.com*.

Les manuels d'installation en français et en anglais sont disponibles chez votre détaillant local. Visitez *www.kozyheat.com*.

PFS C US

NATIONAL FIREPLACE INSTITUTE NFI CERTIFIED www.nficertified.org

We suggest that our gas hearth products be installed and serviced by professionals who are certified in the U.S. by the National Fireplace Institute® (NFI) as NFI Gas Specialists.

⚠WARNING:
FIRE OR EXPLOSION HAZARD
Failure to follow safety warnings exactly could result in serious injury, death, or property damage.

- **Do not store or use gasoline or other flammable vapors and liquids in the vicinity of this or any other appliance.**
- **WHAT TO DO IF YOU SMELL GAS**
  - **Do not try to light any appliance.**
  - **Do not touch any electrical switch; do not use any phone in your building.**
  - **Leave the building immediately.**
  - **Immediately call your gas supplier from a neighbor's phone. Follow the gas supplier's instructions.**
  - **If you cannot reach your gas supplier, call the fire department.**
- **Installation and service must be performed by a qualified installer, service agency or the gas supplier.**

This appliance may be installed in an aftermarket, permanently located, manufactured home (USA only) or mobile home, where not prohibited by local codes.

This appliance is only for use with the type of gas indicated on the rating plate. This appliance is not convertible for use with other gases, unless a certified kit is used.

⚠ DANGER

HOT GLASS WILL CAUSE BURNS

DO NOT TOUCH GLASS UNTIL COOLED

NEVER ALLOW CHILDREN TO TOUCH GLASS

A barrier designed to reduce the risk of burns from the hot viewing glass is provided with this appliance and shall be installed for the protection of children and other at-risk individuals.

INSTALLER: Leave this manual with the appliance.
CONSUMER: Retain this manual for future reference.

CONGRATULATIONS!

Hussong Manufacturing welcomes you as a new owner of a Kozy Heat gas fireplace. Kozy Heat products are designed with superior components and materials, assembled with care by trained craftsmen who take pride in their work. To ensure you receive a quality product, the burner and valve assembly are 100 percent test-fired, and the complete fireplace is thoroughly inspected before packaging. Our commitment to quality and customer satisfaction has remained the same for over 40 years. We offer a complete line of gas and wood fireplaces, along with stylish accessories to complement any decor. Adding a fireplace is one of the best ways to increase the value of your home, and we are proud to offer a network of dealers throughout the country to help make your experience everything you imagine. We pride ourselves in being dedicated not only to functionality and reliability, but also customer safety. We offer our continual support and guidance to help you achieve the maximum benefit and enjoyment from your Kozy Heat gas fireplace.

Jim Hussong
President

Dudley Hussong
Board Chairman

Read this manual before installing or operating this appliance.
Please retain this owner's manual for future reference.

Homeowner Reference Information

We recommend you record the following information:

Model Name: _____ Date purchased/installed: _____

Serial Number: _____ Location of fireplace: _____

Dealership Purchased from: _____ Dealer phone: _____

Notes: _____

_____

_____

_____

TABLE OF CONTENTS

TABLE OF CONTENTS 5

1.0 INTRODUCTION 7
1.1 Appliance Certification 7
1.2 California Proposition 65 Warning 7
1.3 Requirements for the Commonwealth of Massachusetts 7

2.0 SPECIFICATIONS 8
2.1 Heating Specifications 8
2.2 Appliance Dimensions 9
2.3 Safety Barrier Dimensions 12

3.0 FRAMING 13
3.1 Appliance Placement Considerations 13
3.2 Floor Support and Protection 13
3.3 Clearances to Combustibles 14
3.4 Vent Termination Framing 15
3.5 Outdoor Covered Fireplace Installation 16

4.0 GAS LINE CONNECTION 17
4.1 Gas Conversion (sold separately) 17
4.2 Gas Pressures 17
4.3 Gas Line Installation 17

5.0 TERMINATION LOCATIONS 18
5.1 Vertical Vent Cap Termination 18
5.2 Minimum Termination Clearances 19

6.0 VENTING 20
6.1 Approved 4" x 6⅝" Vent Systems 20
6.2 Venting Requirements 20
6.3 Use of Elbows 20
6.4 Vent Restriction 21
6.5 Vertical Terminations 22
6.6 Combination Venting 23

7.0 FIREPLACE SETUP 24
7.1 Safety Barrier Installation 24
7.2 Glass Frame Assembly 24
7.3 #BW20-500 Log Set Installation 25
7.4 Control Board Removal and Installation 26

8.0 ELECTRICAL INFORMATION 27
8.1 Electrical Specifications 27
8.2 Wiring Requirements 27
8.3 #BW20-028MV Optional Fan Kit 30

9.0 OPERATING INSTRUCTIONS 31
9.1 Lighting Instructions (#BIR-20-LE) 31
9.2 Lighting Instructions (#BIR-20-MV) 33

10.0 ADJUSTMENT 34
10.1 Gas Pressure Testing 34
10.2 Burner Flame Adjustments 36

11.0 TROUBLESHOOTING 39
11.1 Electronic Ignition System 39
11.2 Continuous Pilot Ignition (Millivolt) System 41

12.0 MAINTENANCE 43
12.1 Firebox 43
12.2 Fan (optional) 43
12.3 Vent System 43
12.4 Glass Assembly 43
12.5 Burner and Pilot System 44

13.0 REPLACEMENT PARTS LIST 45

LIMITED LIFETIME WARRANTY 47

1.0 INTRODUCTION

1.1 Appliance Certification

Laboratory: PFS in Cottage Grove, Wisconsin

Standards:

ANSI Z21.88-2017/CSA 2.33-2017, Vented Gas Fireplace Heaters

CSA 2.17-2017, Gas-Fired Appliances for Use at High Altitudes

This installation must conform with local codes, or in the absence of local codes, with the National Fuel Gas Code, ANSI Z223.1/NFPA 54, or the Natural Gas and Propane Installation Code, CSA B149.1.

1.2 California Proposition 65 Warning

WARNING: This product can expose you to chemicals including Carbon Monoxide, that is an externally vented by-product of fuel combustion, which is [are] known to the State of California to cause birth defects or other reproductive harm. For more information, visit www.P65Warnings.ca.gov.

1.3 Requirements for the Commonwealth of Massachusetts

The following requirements reference various Massachusetts and national codes not contained in this manual.

For all sidewall horizontally vented gas fueled equipment installed in every dwelling, building or structure used in whole or in part for residential purposes, including those owned or operated by the Commonwealth and where the side wall exhaust vent termination is less than (7) feet above finished grade in the area of the venting, including but not limited to decks and porches, the following requirements shall be satisfied:

1.3.1 Installation of Carbon Monoxide Detectors

At time of installation of side wall horizontally vented gas fueled equipment, the installing plumber or gas-fitter shall observe that a hard wired carbon monoxide detector with an alarm and battery back-up is installed on the floor level where the gas equipment is to be installed. In addition, the installing plumber or gas-fitter shall observe that a battery operated or hard wired carbon monoxide detector is installed on each additional level of the dwelling, building or structure served by the side wall horizontal vented gas fueled equipment. It shall be the responsibility of the property owner to secure the services of qualified licensed professionals for the installation of hard wired carbon monoxide detectors.

In the event that the side wall horizontally vented gas fueled equipment is installed in a crawl space or attic, the hard wired carbon monoxide detector with alarm and battery back-up may be installed on the next adjacent floor level. In the event that the requirements of this subdivision can not be met at the time of completion of installation, the owner shall have a period of thirty (30) days to comply with the above requirements; provided, however, that during said thirty (30) day period, a battery operated carbon monoxide detector with an alarm shall be installed.

1.3.2 Approved Carbon Monoxide Detectors

Each carbon monoxide detector as required in accordance with the above provisions shall comply with NFPA 720 and be ANSI/UL 2034 listed and IAS certified.

1.3.3 Signage

A metal or plastic identification plate shall be permanently mounted to the exterior of the building at a minimum of eight (8) feet above grade directly in line with the exhaust vent terminal for the horizontally vented gas fueled heating appliance or equipment. The sign shall read, in print no less the one-half inch (½) in size, "GAS VENT DIRECTLY BELOW. KEEP CLEAR OF ALL OBSTRUCTIONS".

1.3.4 Inspection

The state or local gas inspector of the side wall horizontally vented gas fueled equipment shall not approve the installation unless, upon inspection, the inspector observes carbon monoxide detectors and signage installed in accordance with the provisions of 248 CMR 5.08 (2) (a) 1 through 4.

1.3.5 Exemptions

The following equipment is exempt from 248 CMR 5.08 (2) (a) 1 through 4: The equipment listed in Chapter 10 entitled "Equipment Not Required To Be Vented" in the most current edition of NFPA 54 as adopted by the Board; and Product Approved side wall horizontally vented gas fueled equipment installed in a room or structure separate from the dwelling, building or structure used in whole or in part for residential purposes.

1.3.6 Manufacturer Requirements

1.3.6.1 Gas Equipment Venting System Provided

When the manufacturer of Product Approved side wall horizontally vented gas equipment provides a venting system design or venting system components with the equipment, the instructions provided by the manufacturer for installation of the equipment and the venting system shall include:

- Detailed instructions for the installation of the venting system design or the venting system components; and
- A complete parts list for the venting system design or venting system.

1.3.7 Gas Equipment Venting System NOT Provided

When the manufacturer of Product Approved side wall horizontally vented gas equipment does not provide the parts for venting the flue gases, but identifies "special venting systems", the following requirements shall be satisfied by the manufacturer:

- The referenced "special venting systems" instructions shall be included with the appliance or equipment installation instructions and;
- The "special venting systems" shall be Product Approved by the Board, and the instructions for that system shall include a parts list and detailed installation instructions.

A copy of all installation instructions for all Product Approved side wall horizontally vented gas fueled equipment, all venting instructions, all parts lists for venting instructions, and/or all venting design instructions shall remain with the appliance or equipment at the completion of the installation.

2.0 SPECIFICATIONS

2.1 Heating Specifications

	Natural Gas	Propane
Maximum Input Rating	32,000 Btu/h (9.4 kW)	32,000 Btu/h (9.4 kW)
Minimum Input Rating	23,000 Btu/h (6.7 kW)	23,000 Btu/h (6.7 kW)
Manifold Pressure (High)	3.5" WC (0.87 kPa)	10" WC (2.49 kPa)
Manifold Pressure (Low)	1.6" WC (0.40 kPa)	6.4" WC (1.59 kPa)
Orifice Size (DMS)	FRONT: #.0625 BACK: #44	FRONT: #61 BACK: #54

2.1.1 Altitude Adjustment

This appliance may be installed at higher altitudes. Please refer to National Fuel Gas Code ANSI Z223.1/NFPA 54, CSA-B149.1 Natural Gas and Propane Installation Code, local authorities, or codes having jurisdiction in you area regarding derate guidelines.

2.1.1.1 US Installations

Refer to the American Gas Association guidelines for the gas designed appliances derating method. For elevations above 2,000 ft (610 m), input ratings are to be reduced by 4% for each 1,000 ft (305 m) above sea level.

2.1.1.2 Canadian Installations

When the appliance is installed at elevations above 4,500 ft (1,372 m), the certified high altitude rating shall be reduced at the rate of 4% for each additional 1,000 ft (305 m).

2.2 Appliance Dimensions

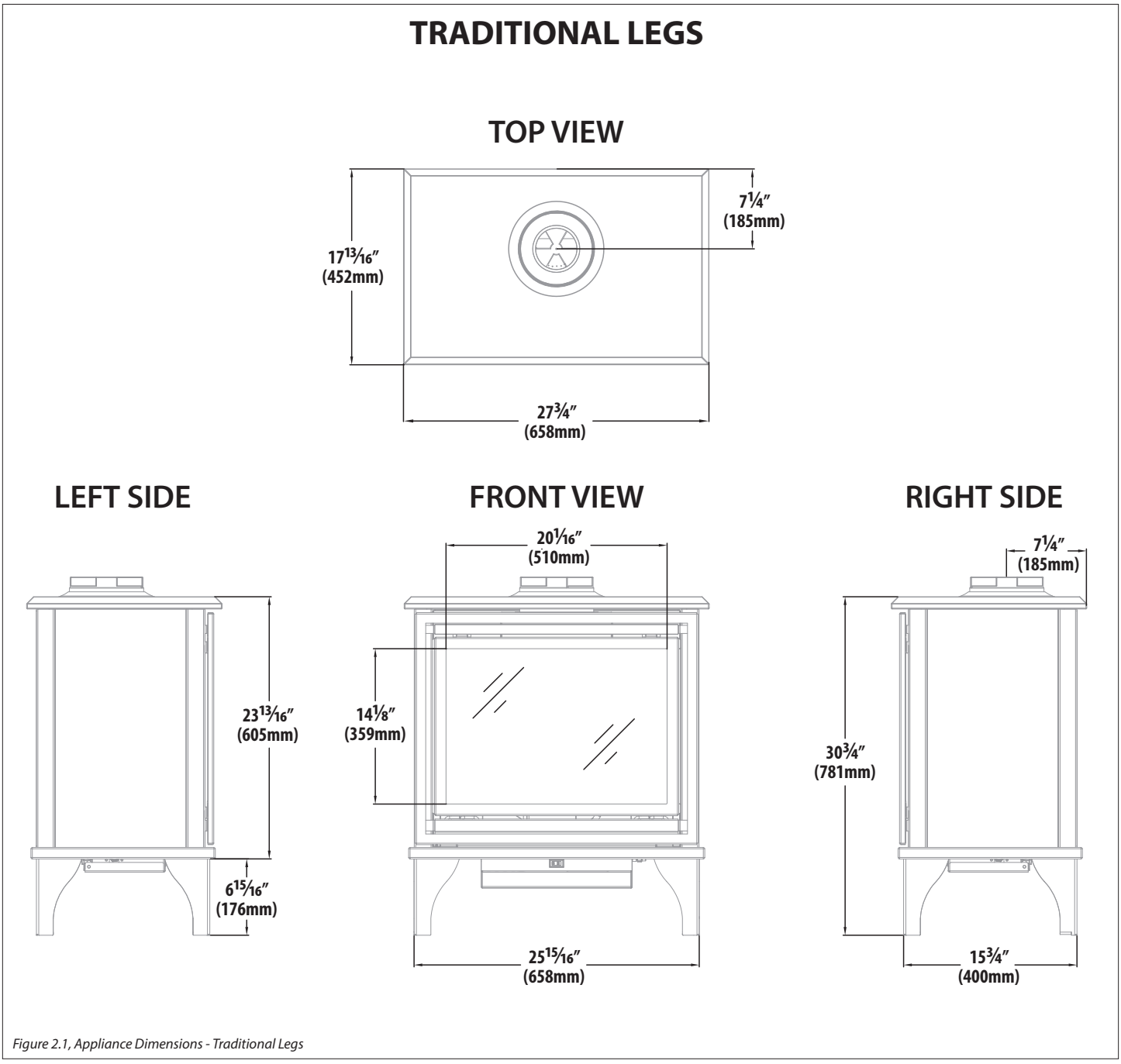

Figure 2.1, Appliance Dimensions - Traditional Legs

PEDESTAL BASE

TOP VIEW

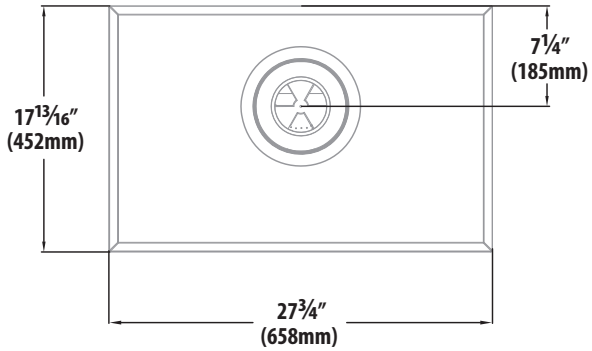

LEFT SIDE

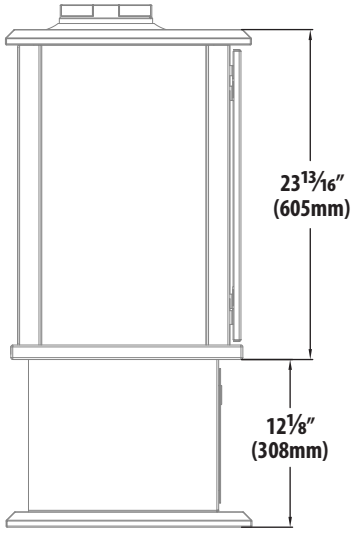

FRONT VIEW

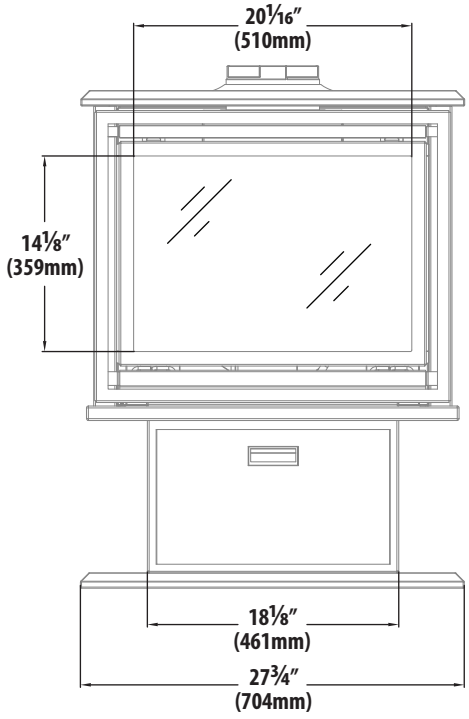

RIGHT SIDE

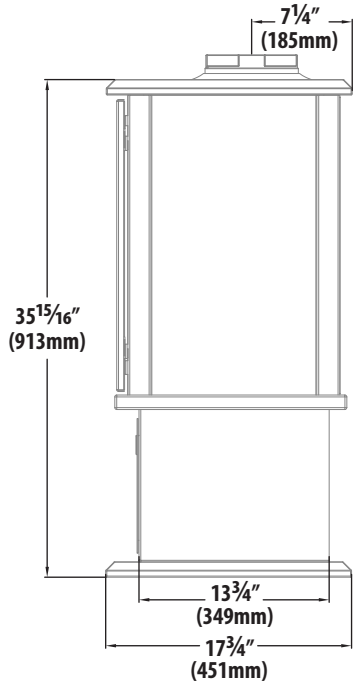

Figure 2.2, Appliance Dimensions - Pedestal Base

CONTEMPORARY BASE

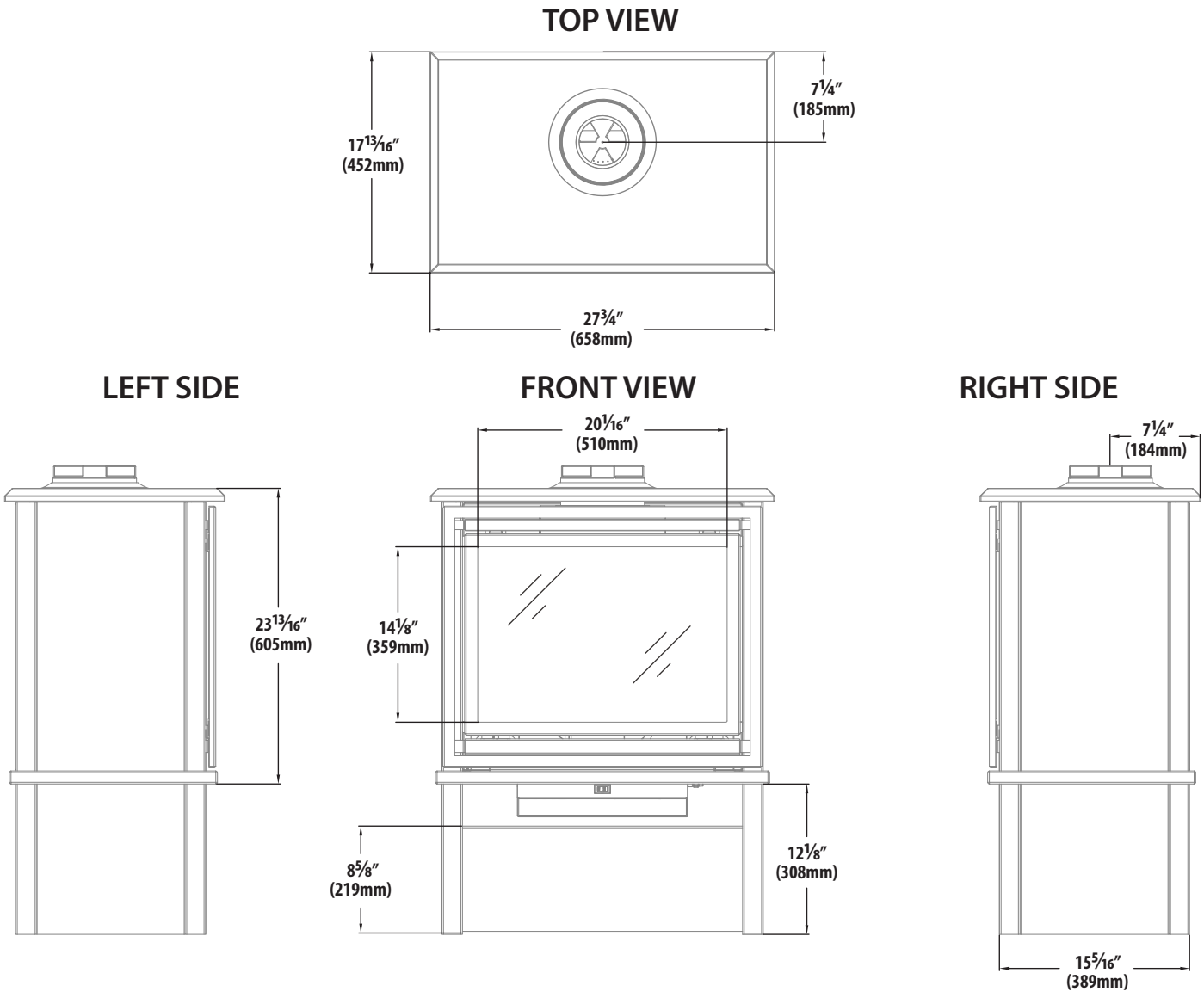

Figure 2.3, Appliance Dimensions - Contemporary Base

2.3 Safety Barrier Dimensions

WARNING: A barrier designed to reduce the risk of burns from the hot viewing glass is provided with this appliance and shall be installed for the protection of children and other at-risk individuals.

If the barrier becomes damaged, the barrier shall be replaced with Hussong Mfg.'s barriers for this appliance. Only doors certified with the appliance shall be used.

Please refer to Section 7.1 Safety Barrier Installation on page 24 for installation instructions.

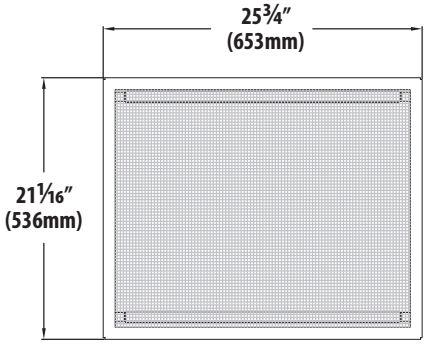

BW20-FRSF

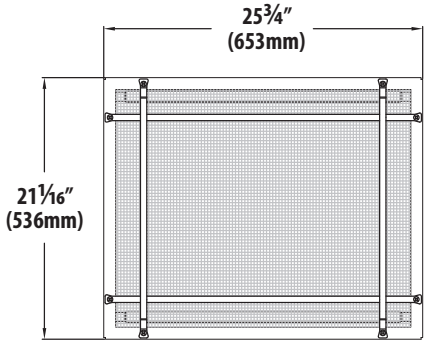

BW20-PSF

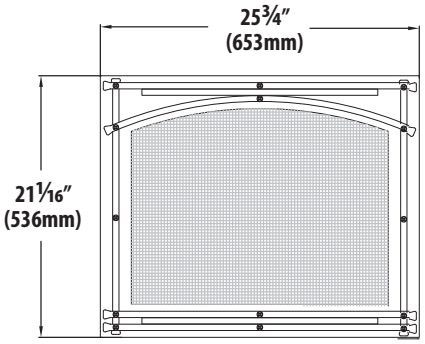

BW20A-MSF

3.0 FRAMING

3.1 Appliance Placement Considerations

WARNING: Due to high temperatures, the appliance should be located out of traffic and away from furniture and draperies.

FIRE HAZARD: Do NOT install this appliance directly on carpeting, vinyl, or any other combustible material other than wood.

- This appliance must be installed on a level surface capable of supporting the fireplace and venting. If possible, place the fireplace in a position where the vent terminates between two studs, eliminating the need for any additional framing.
- This fireplace may be installed in a bedroom.
- Please be aware of the large amount of heat this fireplace will produce when determining a location.

3.2 Floor Support and Protection

- The fireplace must be placed directly on a wood or non-combustible surface (not linoleum or carpet) extending the entire depth and width of the fireplace
- If this appliance is to be installed directly on carpeting, tile, or other combustible material other than wood flooring, this appliance shall be installed on a metal or wood panel extending the full width and depth of the appliance.
- If the appliance is to be installed above floor level, a solid, continuous platform must be constructed below the appliance.

3.3 Clearances to Combustibles

Table 3.1, Minimum Appliance Clearances to Combustible Material		
From appliance top corner to sidewall	1 in	25 mm
From appliance top corner to backwall	5 in	127 mm
From appliance top to ceiling	35-3/4 in	908 mm
From top of horizontal pipe surface to ceiling	3-1/8 in	80 mm

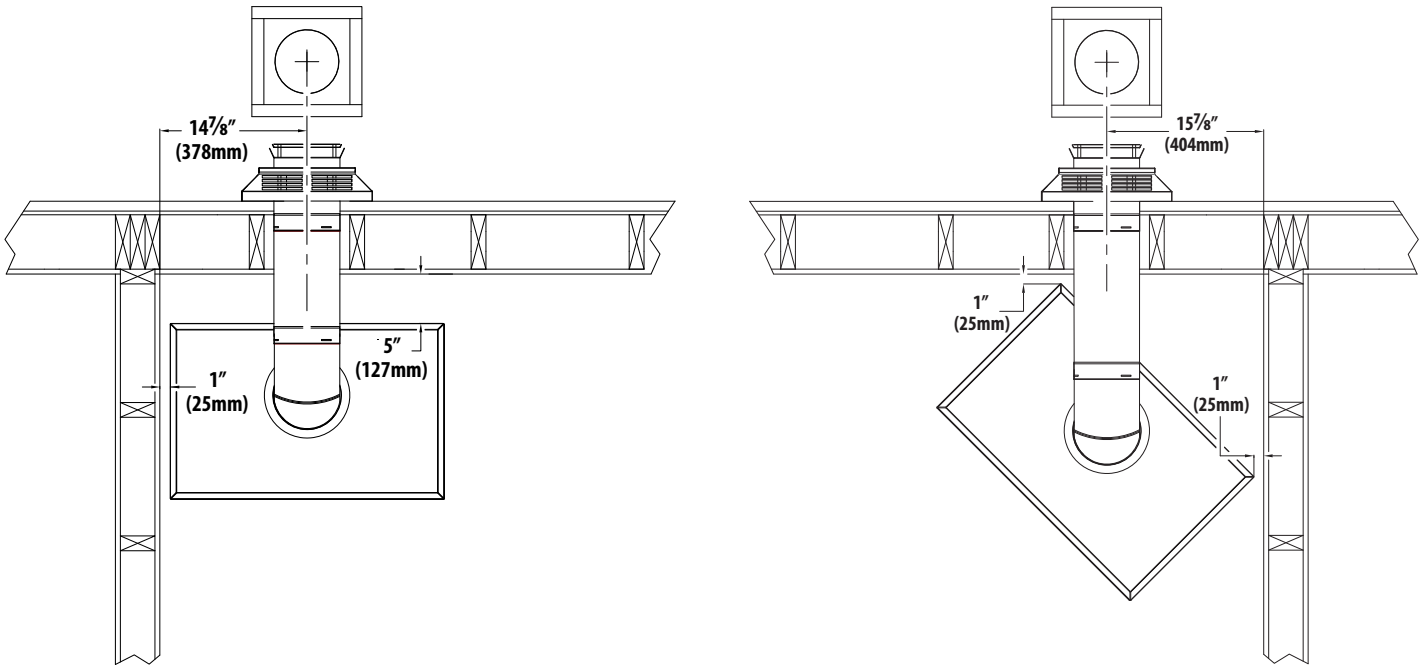

Figure 3.1, Typical Installation Options

3.4 Vent Termination Framing

IMPORTANT: Vent cap location must be in compliance with Section 5.2 Minimum Termination Clearances on page 19.

WARNING: DO NOT RECESS THE VENT CAP INTO WALL OR SIDING.

3.4.1 Vertical Terminations

CAUTION: Cold air transfer area. The surround fireplace chase must comply with all clearances as outlined in this manual, and be constructed in compliance with local building codes. Outside walls should be insulated to prevent cold air from entering room.

- Follow vent pipe manufacturer's installation instructions for vertical terminations.
- A minimum of 1 in (25 mm) clearance on all sides of the vertical vent pipe must be maintained.
- Attic insulation shields may be insulated using unfaced insulation products listed as non-combustible per ASTM E 136.

3.4.2 Horizontal Terminations

IMPORTANT: Horizontal vent sections require 1/4 in (6 mm) rise for every 12 in (305 mm) of travel.

NOTE: Elbows listed with approved vent systems for this appliance vary in vertical length. Please consult the vent manufacturer's instructions to determine the elbow dimension used for installation. Adjust the wall pass-through rough opening dimensions as necessary to maintain clearance requirements.

NOTE: Wall thimble products that comply with the required clearance to combustibles must be installed for all horizontal vent runs that pass through interior or exterior walls. These wall thimble products may be insulated using unfaced insulation products listed as noncombustible per ASTM E 136.

1. Measure from floor level of the fireplace to the center of where the vent pipe will penetrate the wall.
   Elbows listed with approved vent systems for this appliance vary in vertical length. Please consult the vent manufacturer's instructions to determine the elbow dimension used for installation.
2. Adjust the wall pass-through rough opening dimensions as necessary to maintain clearance requirements. There is a 1" (25mm) clearance on all sides of the horizontal pipe at the wall pass-through.
3. Cut and frame an opening in the wall to allow the vent system to run level through the wall pass-through.
4. Follow the vent pipe manufacturer's installation instructions for vent installation.

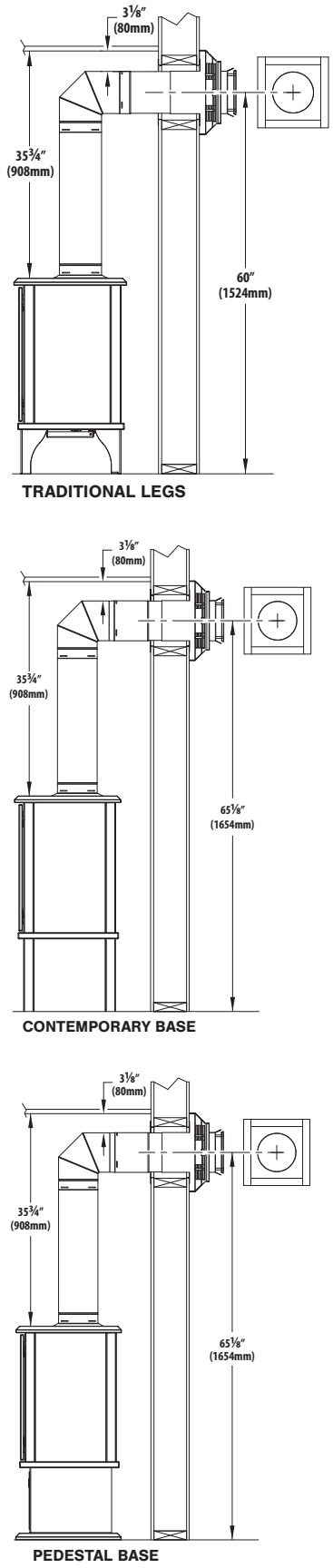

Figure 3.2, Minimum Horizontal Venting

3.5 Outdoor Covered Fireplace Installation

A outdoor covered fireplace installation allows a fireplace to be installed in an outdoor covered area, where the appliance is protected from direct precipitation.

Follow the instructions and illustration below for installation procedures.

3.5.1 Safety Screen Barriers

Hussong Mfg. highly recommends to use black painted safety barriers in outdoor installations. Other screen barriers that incorporate a plated or patina finish are highly susceptible to oxidation and discoloration.

3.5.2 Requirements

- Fireplace operation is approved from 40°F to 110°F.
- All wiring connections shall be in accordance with outdoor requirements of NECA NFPA 70.
- All clearances and requirements in your appliance manual must be adhered to.

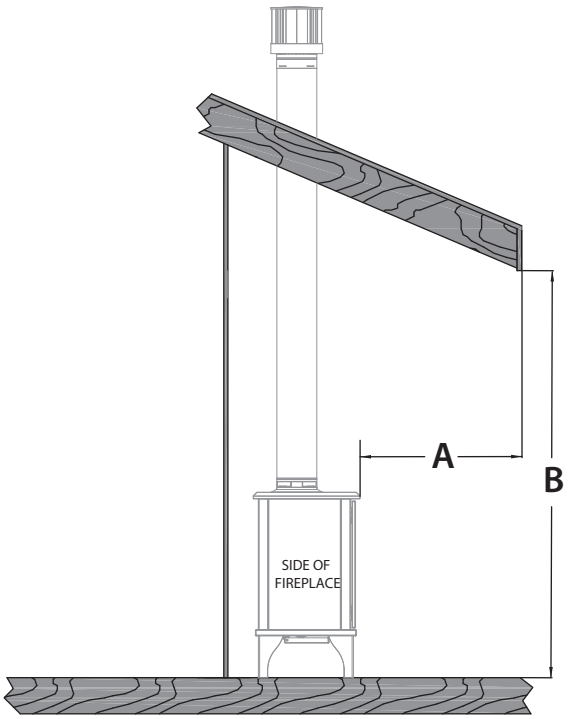

The overhang (A) must be a minimum of 1/2 or greater of the roofline elevation (B) above the base of the fireplace.

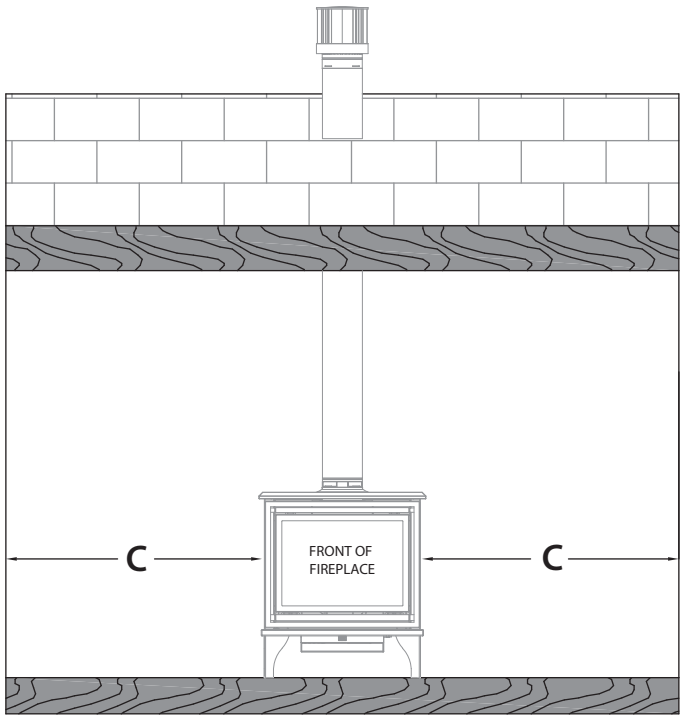

The width of the overhang to each side of the appliance (C) must be a minimum of 1/2 or greater of the roofline elevation (B) above the base of the fireplace.

EXAMPLE: If roofline (B) is 10 ft above the base of fireplace, the overhang (A) must be 5 ft or greater. The width of the overhang to EACH side of the fireplace (C) must be 5 ft or greater.

Figure 3.3, Outdoor Covered Fireplace Install

4.0 GAS LINE CONNECTION

4.1 Gas Conversion (sold separately)

ATTENTION: The conversion shall be carried out in accordance with the requirements of the provincial authorities having jurisdiction and in accordance with the requirements of the ANSI Z223.1 installation code.

This fireplace is manufactured for use with natural gas. Follow the instructions included with the conversion kit if converting to propane.

4.2 Gas Pressures

NOTE: The appliance and its individual shutoff valve must be disconnected from the gas supply piping system during any pressure testing of that system at pressures in excess of ½ psi (3.5 kPa). For test pressures equal to or less than ½ psi (3.5 kPa), the appliance must be isolated from the gas supply piping system by closing its individual manual shut-off valve.

- For high altitude installations, consult the local gas distributor or the authority having jurisdiction for proper rating methods.
- For pressure testing instructions, refer to Section 10.1 Gas Pressure Testing on page 34.

Table 4.1, Inlet Pressure Requirements - BIR-20-LE (Electronic)

Gas Pressure	Natural Gas	Propane
Minimum Inlet Pressure	5"WC (1.25 kPa)	12"WC (2.99 kPa)
Maximum Inlet Pressure	10.5"WC (2.62 kPa)	13"WC (3.24 kPa)

Table 4.2, Inlet Pressure Requirements - BIR-20-MV (Millivolt)

Gas Pressure	Natural Gas	Propane
Minimum Inlet Pressure	5"WC (1.25 kPa)	11"WC (2.74 kPa)
Maximum Inlet Pressure	10.5"WC (2.62 kPa)	13"WC (3.24 kPa)

4.3 Gas Line Installation

CAUTION: Installation of the gas line must only be done by a qualified person in accordance with local building codes, if any. If not, follow ANSI 223.1. Commonwealth of Massachusetts installations must be done by a licensed plumber or gas fitter.

- A listed (and Commonwealth of Massachusetts approved) ½ in. (13 mm) tee handle manual shut-off valve and flexible gas connector are to be connected to the ½ in. (13 mm) control valve inlet. If substituting for these components, please consult local codes for compliance.
- This fireplace is equipped with a 3/8" (10 mm) x 18" (457 mm) long flexible gas connector and manual shut-off valve.
- The gas line should be run to the point of connection where the shut-off valve and flexible gas line will connect.
- Do not run gas line in a manner that would obstruct fan operation.

5.0 TERMINATION LOCATIONS

5.1 Vertical Vent Cap Termination

WARNING: This gas appliance must not be connected to a chimney serving any other appliance.

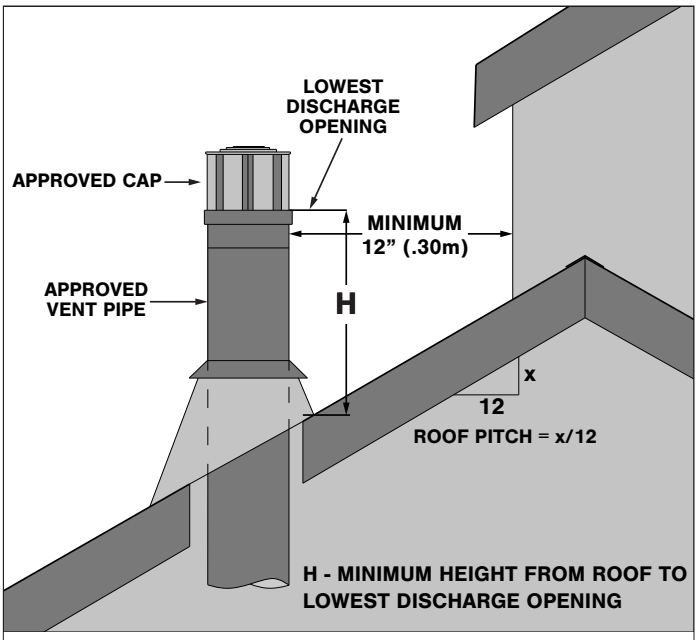

Figure 5.1, Vertical Vent Cap Clearance

	Minimum height (H) from roof	
Roof Pitch	**Feet**	**Meters**
Flat to 6/12	1.0	0.30
Over 6/12 to 7/12	1.25	0.38
Over 7/12 to 8/12	1.5	0.46
Over 8/12 to 9/12	2.0	0.61
Over 9/12 to 10/12	2.5	0.76
Over 10/12 to 11/12	3.25	0.99
Over 11/12 to 12/12	4.0	1.22
Over 12/12 to 14/12	5.0	1.52
Over 14/12 to 16/12	6.0	1.83
Over 16/12 to 18/12	7.0	2.13
Over 18/12 to 20/12	7.5	2.27
Over 20/12 to 21/12	8.0	2.44

5.2 Minimum Termination Clearances

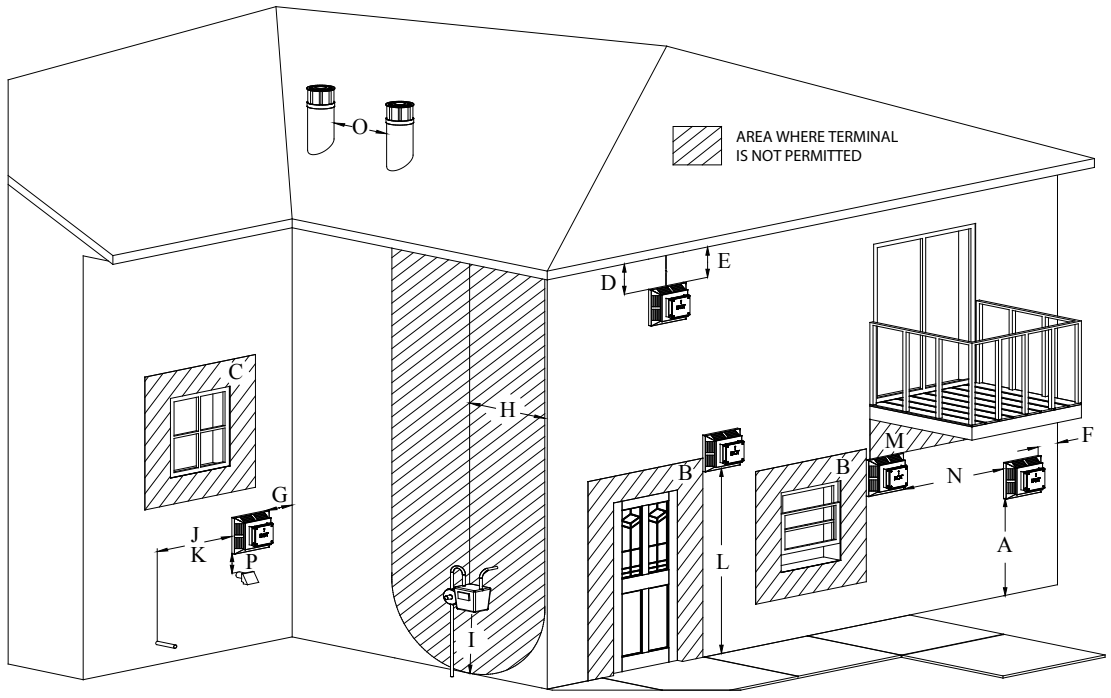

Figure 5.2, Vent Cap Locations

		Canadian installations	US installations
A	Clearance above grade, veranda, porch, deck, or balcony	12 in (30 cm)	12 in (30 cm)
B	Clearance to window or door that may be opened	12 in (30 cm)	9 in (23 cm)
C	Clearance to permanently closed window (recommended to prevent condensation on window)	12 in (30 cm)*	12 in (30 cm)*
D	Vertical clearance to ventilated soffit located above the terminal within a horizontal distance of 2 feet (61 cm) from the center line of the terminal	24 in (61 cm)*	24 in (61 cm)*
E	Clearance to unventilated soffit	12 in (30 cm)*	12 in (30 cm)*
F	Clearance to outside corner	0 in (0 cm)*	0 in (0 cm)*
G	Clearance to inside corner	12 in (30 cm)*	12 in (30 cm)
H	Clearance to each side of center line extended above meter/regulator assembly	3 ft (91 cm) within a height 15 ft (4.5 m) above the meter/ regulator assembly	*
I	Clearance to service regulator vent outlet	3 ft (91 cm)	*
J	Clearance to non mechanical air supply inlet to building or the combustion air inlet to any other appliance	12 in (30 cm)	9 in (23 cm)
K	Clearance to mechanical air supply inlet	6 ft (1.83 m)	3 ft (91 cm) above if within 10 ft (3 m) horizontally Massachusetts: 10 ft (3 m)
L	Clearance above paved sidewalk or paved driveway located on public property	7 ft (2.13 m)†	*
M	Clearance under veranda, porch deck, or balcony	12 in (30 cm)‡	12 in (30 cm)
N	Clearance between two horizontal terminations	12 in (30 cm)	12 in (30 cm)
O	Clearance between two vertical terminations (may be same height)	12 in (30 cm)	12 in (30 cm)
P	Above furnace exhaust or inlet	12 in (30 cm)	12 in (30 cm)

* Clearance in accordance with local installation codes and the requirements of the gas supplier.

† A vent shall not terminate directly above a sidewalk or paved driveway that is located between two single family dwellings and serves both dwellings.

‡ Permitted only if veranda, porch, deck, or balcony is fully open on a minimum of two sides beneath the floor.

VINYL SOFFIT, VINYL CEILING, AND VINYL OVERHANG DISCLAIMER: Clearances to heat resistant material (i.e. wood, metal). This does not include vinyl. Hussong Manufacturing Co., Inc. will not be held responsible for heat damage caused from terminating under vinyl overhangs, vinyl ceilings, or vinyl ventilated/unventilated soffits.

6.0 VENTING

6.1 Approved 4" x 6⅝" Vent Systems

This appliance is equipped for use with a 4" exhaust by 6-5/8" air intake co-axial vent pipe system. This appliance is approved for use with vent manufacturers (horizontal and vertical terminations): American Metal Products (Ameri-Vent), BDM, ICC, Metal Fab, Olympia Chimney Supply, Inc., Selkirk, and Simpson DuraVent. Refer to the vent manufacturer's installation manual for complete installation instructions. Vent installation must conform with venting requirements and restrictions as outlined in this manual.

6.2 Venting Requirements

Consult the local and national installation codes to assure adequate combustion and ventilation air is available. Venting requirements apply to both natural gas and propane.

NOTE: Wall thimble products that comply with the required clearance to combustibles must be installed for all horizontal vent runs that pass through interior or exterior walls. These wall thimble products may be insulated using unfaced insulation products listed as noncombustible per ASTM E 136.

NOTE: Attic insulation shields may be insulated using unfaced insulation products listed as noncombustible per ASTM E 136.

- Flame height and appearance will vary depending upon venting configuration and the type of fuel used.
- Refer to the vent manufacturer's installation manual for complete installation instructions. Vent installation must conform with venting requirements and restrictions as outlined in this manual.
- Provide a means for visually checking the vent connection to the appliance after the fireplace is installed.
- A minimum of 1 in (25 mm) clearance on all side of the vertical pipe must be maintained.
- A minimum of 1 in (25 mm) clearance on all sides of the horizontal vent pipe at the wall pass-through must be maintained.

6.3 Use of Elbows

- **MAXIMUM NUMBER OF 90° ELBOWS: 5**
- For each additional 90° elbow used after the first elbow, 3 ft (91.4 cm) must be subtracted from maximum venting allowed.
- For each 45° elbow used, 1½ ft (457 mm) must be subtracted from maximum venting allowed.
- (2) 45° degree elbows may be used in place of (1) 90° elbow.

6.4 Vent Restriction

Vertical terminations may display an active, compact flame. To achieve desirable flame appearance, the vent exhaust may be restricted by the restrictor plate (included in components packet) and/or by adjusting the built-in restrictor located in the fireplace baffle. This fireplace is shipped with the baffle restrictor set in position for natural gas minimum horizontal venting.

Hussong Manufacturing has outlined vent restriction recommendations with for vent configurations listed in the following pages. Follow the instructions below and vent restriction recommendations on the following pages for optimal flame appearance.

6.4.1 Restrictor Plate Assembly and Installation

A restrictor plate (included in components packet) may be installed before vent installation to achieve desired flame appearance. Hussong Manufacturing has outlined restrictor plate recommendations for vent configurations listed on the following pages. For vent restriction plate recommendations after vent installation, refer to Section 10.2.2 Vent Restriction on page 37.

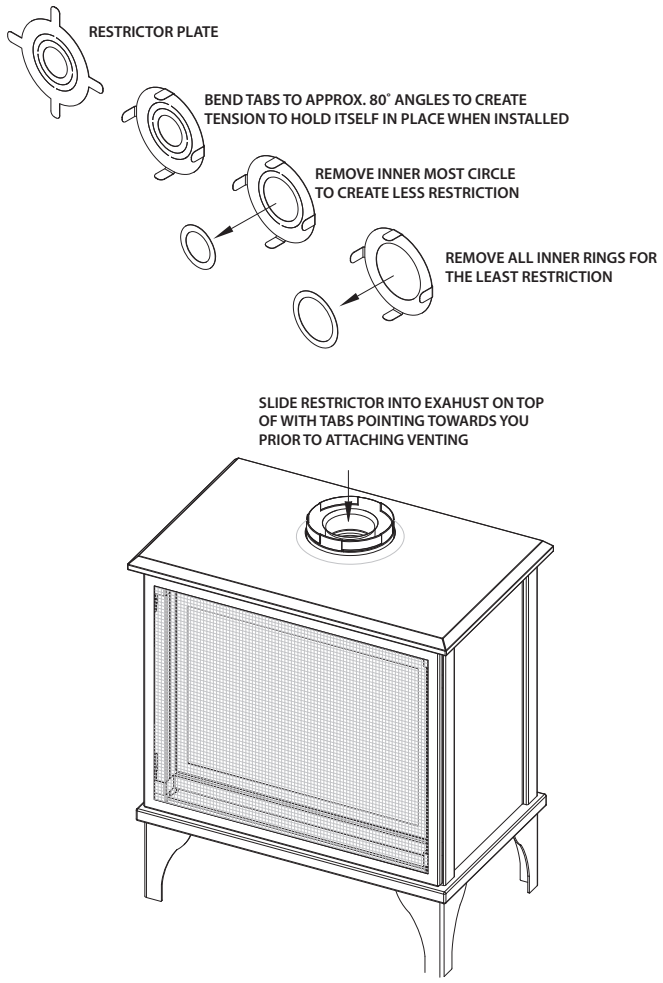

Figure 6.1, Restrictor Assembly and Installation

6.4.2 Baffle Restriction

This fireplace is shipped with the baffle restrictor set in position for natural gas minimum horizontal venting. Hussong Manufacturing has outlined baffle restrictor adjustments for vent configurations listed on the following pages. To adjust the baffle restrictor,

1. Remove the safety barrier and glass frame assembly.
2. Remove and save (1) screw to adjust the baffle restrictor to achieve desired flame appearance.
3. Secure the baffle restrictor with (1) screw previously removed.
4. Reinstall all components previously removed.

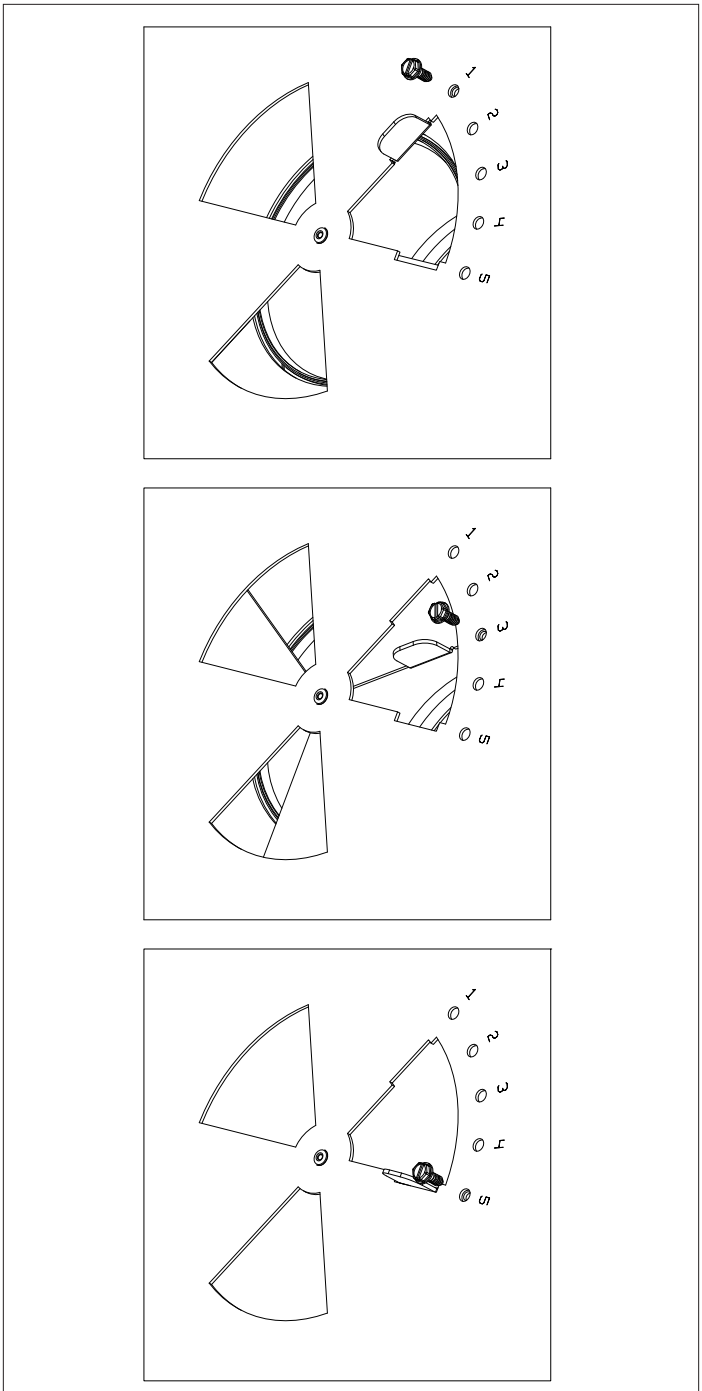

Figure 6.2, Baffle Restrictor Adjustments

6.5 Vertical Terminations

NOTE: Attic insulation shields may be insulated using unfaced insulation products listed as non-combustible per ASTM E 136.

Table 6.1, NG/Propane - Minimum / Maximum Vertical Terminations			
Minimum Vertical Length		**Maximum Vertical Length**	
3 ft	914 mm	50 ft	15.2 m

Table 6.2, Recommended Restriction for Vertical Terminations			
Fuel	**Vent Configurations**	**Baffle Positions**	**Restrictor Setting**
Natural Gas	Minimum Vertical	Setting (5)	Install Restrictor Remove knockout(s)
Natural Gas	Maximum Vertical	Setting (5)	Install Restrictor Remove knockout(s)
Propane	Minimum Vertical	Setting (5)	Install Restrictor Remove knockout(s)
Propane	Maximum Vertical	Setting (5)	Install Restrictor Remove knockout(s)

DIAG.1 VERTICAL TERMINATIONS

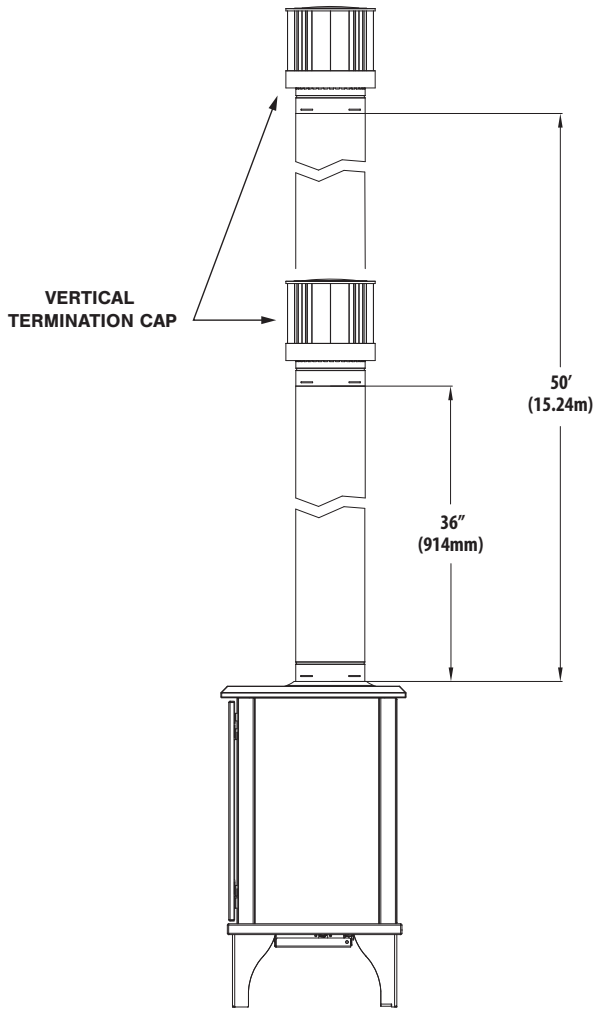

6.6 Combination Venting

IMPORTANT: Horizontal vent sections require ¼ in (6 mm) rise for every 12 in (305 mm) of travel.

Table 6.3, NG & Propane - Minimum Horizontal Vent Terminations					
Minimum Vertical Rise		**Minimum Horizontal Run**		**Maximum Horizontal Run**	
24 in	610 mm	6 in	152 mm	48 in	1219 mm

Table 6.4, NG & Propane- Max Vertical / Max Horizontal Combination					
Maximum Vertical Rise		**Maximum Horizontal Run**		**Total Length**	
25 ft	7.6 m	25 ft	7.6 m	50 ft	15.2 m
Maximum number of 90° elbows: 5					

Table 6.5, Recommended Restriction for Vertical Terminations			
Fuel	**Vent Config.**	**Baffle Positions**	**Restrictor Setting**
Natural Gas	Min vert / min horz	Setting (3)	None
Natural Gas	Min vert / max horz	Setting (1)	None
Natural Gas	Max vert / max horz	Setting (5)	Install restrictor
Propane	Min vert / min horz	Setting (2)	None
Propane	Min vert / max horz	Setting (5)	None
Propane	Max vert / max horz	Setting (5)	Install restrictor

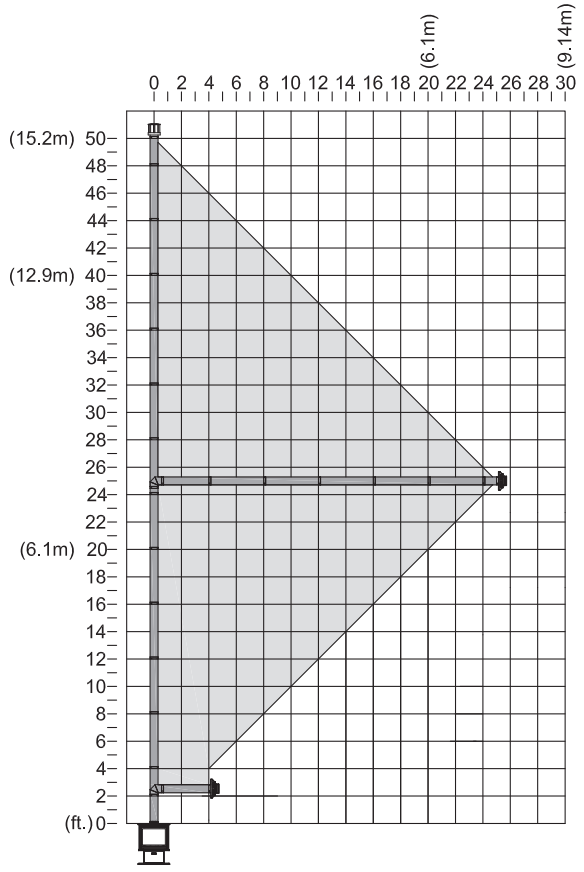

Figure 6.3, Combination Venting (V/H)

DIAG.2 COMBINATION VENTING

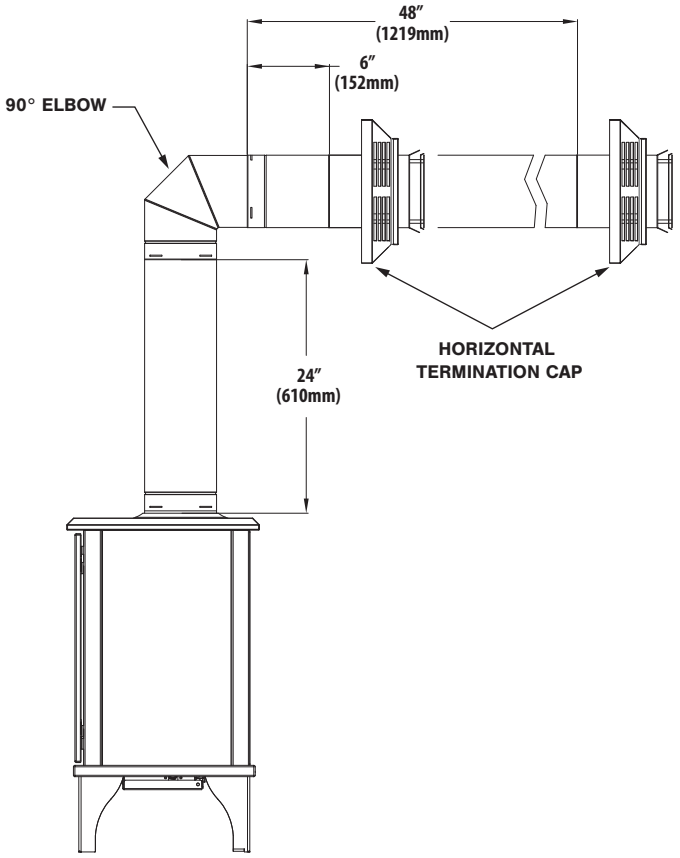

7.0 FIREPLACE SETUP

7.1 Safety Barrier Installation

1. Locate the (4) slots located on each side of the fireplace frame.
2. Align the notched tabs located on the back of the safety screen front with the slots on the fireplace frame.
3. Raise the screen front slightly into slots and allow the tabs to lower into position.

- To remove safety screen: lift the screen up and out of slots.

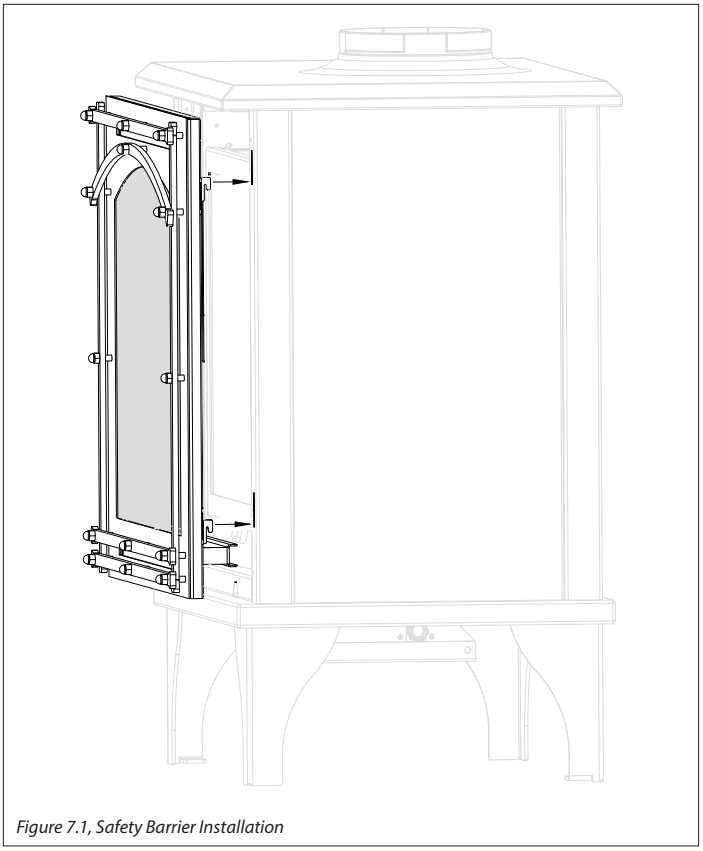

Figure 7.1, Safety Barrier Installation

7.2 Glass Frame Assembly

WARNING: Do not operate this fireplace with the glass removed, cracked, or broken. Replacement of the glass assembly, should be done by a licensed or qualified service person.

7.2.1 Remove Glass Frame Assembly

WARNING: Do not remove the glass assembly when hot.

1. Remove the safety screen.
2. Locate (2) spring-loaded latches securing the glass assembly at the bottom of the firebox.
3. Pull the spring-loaded latches out and down to release the bottom of the glass assembly.
4. Lift glass assembly up and off of the (2) tabs located at the top of the firebox.

7.2.2 Install Glass Frame Assembly

1. Align the slots on top of the glass assembly over the tabs at the top of the firebox while lowering the bottom of the glass assembly into position.
2. Pull the spring-loaded latches out and up to secure the bottom of glass to the bottom of the fireplace.
3. Reinstall the safety screen.

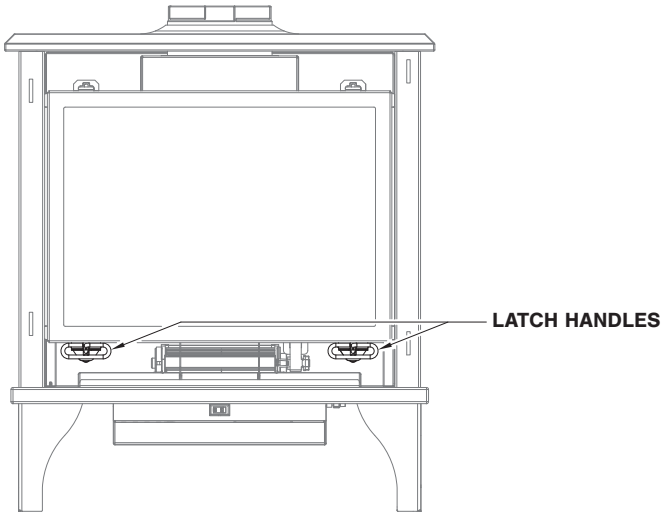

Figure 7.2, Latch Handle Location

7.3 #BW20-500 Log Set Installation

CAUTION: Do not place logs directly over burner port holes. Improper log placement may affect flame appearance and cause excessive soot to build upon the logs and glass.

- If converting to propane, complete the conversion before installing the log set. Follow the conversion instructions included with the kit.
- Log numbers are located on the bottom of each log. Refer to the following instructions and illustrations for proper log placement.

1. Align the holes in the bottom of the ember panel with the (2) mounting pins located on left and right side of the front burner. Push to seat.
2. Align the holes in the bottom of logs BW20-1, BW20-2, and BW20-3 with the mounting pins on the back burner. Push logs down onto pins to seat.
3. Position logs BW20-4 and BW20-6 with the notches in base log BW20-1 and ember panel as shown.
4. Align log BW20-5 with the notch on log BW20-1 and the ember panel as shown.
5. Distribute rockwool embers onto the logs and burner using a stiff bristle brush.

Figure 7.3, Base Logs

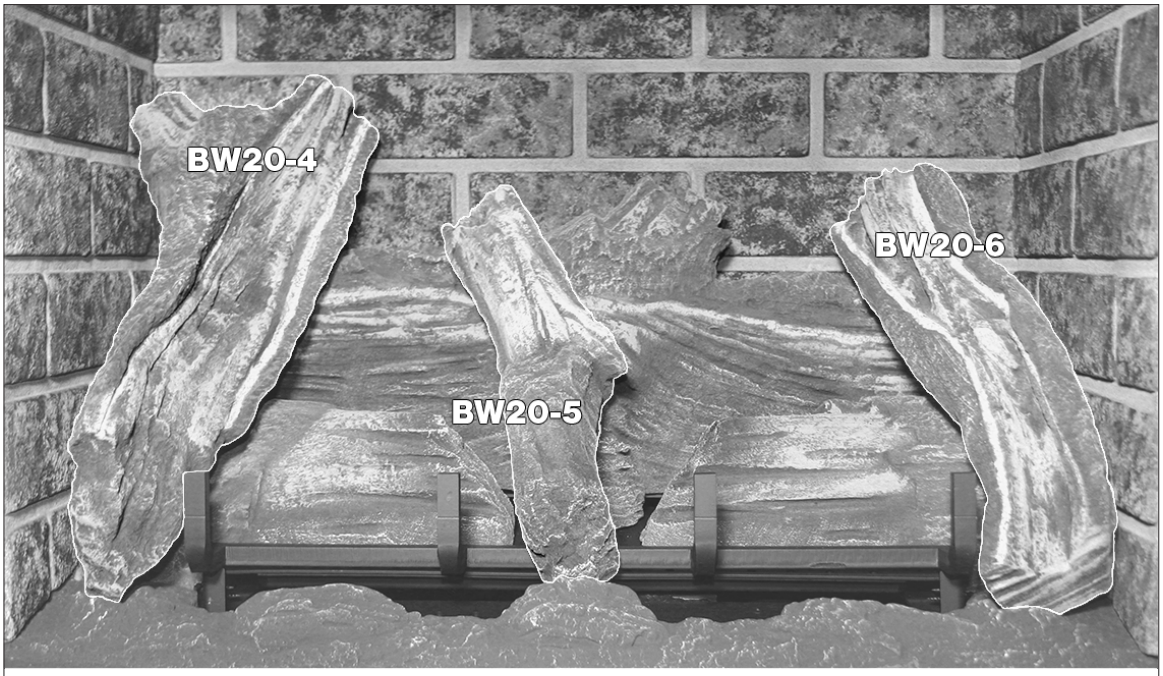

Figure 7.4, Installed Log Set

7.4 Control Board Removal and Installation

WARNING: If burner and/or pilot have been burning, use appropriate protection to avoid burns or damage to personal property before removing any components. DO NOT OPERATE THIS APPLIANCE WITHOUT THE SEALING GASKET (LOCATED UNDER THE CONTROL BOARD) IN PLACE. IF GASKETING IS DAMAGED, IT MUST BE REPLACED.

CAUTION: Check all connections for leaks with soapy water, whether field or factory made.

7.4.1 Control Board Removal

1. Turn the fireplace off.
2. Remove the safety barrier.
3. Locate the manual valve installed by your qualified service technician. Turn the manual valve clockwise to the OFF position.
4. Disconnect any wall switch, remote control, or thermostat from the top and bottom terminals on the gas valve, OR unplug all components from receptacle and disconnect all wiring harnesses attached to the gas valve.
5. Remove the glass frame assembly and log set.
6. Remove the pilot shield.
7. Remove the back log plate (2) screws.
8. Remove (2) screws on each side of the back burner. Slide the burner tube venturi to the right to release from the burner orifice.
9. Remove the front burner from the firebox (4) screws.
10. Remove and save (10) screws securing the control board. Lift the control board and control module out of the firebox, being careful not to damage sealing gasket underneath.

7.4.2 Control Board Installation

1. Place the control module in the firebox, aligning the holes in the control board with the holes in the firebox bottom.
   VERIFY SEALING GASKET IS IN PLACE.
2. Secure the control board to the firebox using (10) screws previously removed.
3. Reinstall the front burner (4) screws, positioning the burner venturi over the burner orifice.
4. Reinstall the back burner. Position the burner tube venturi over the burner orifice. Secure with (2) screws.
5. Reinstall the back log plate (2) screws.
6. Reinstall pilot shield.
7. Reinstall log set.
8. Reconnect any wall switch, remote control, or thermostat wires to the top and bottom terminals on the gas valve, OR reconnect all wiring harnesses to the gas valve. Plug all components into an electrical outlet.
9. Reinstall the glass frame assembly and safety barrier.
10. Turn the manual valve counter clockwise to the ON position.
11. Verify proper log placement, operation of fireplace, and any electrical components.

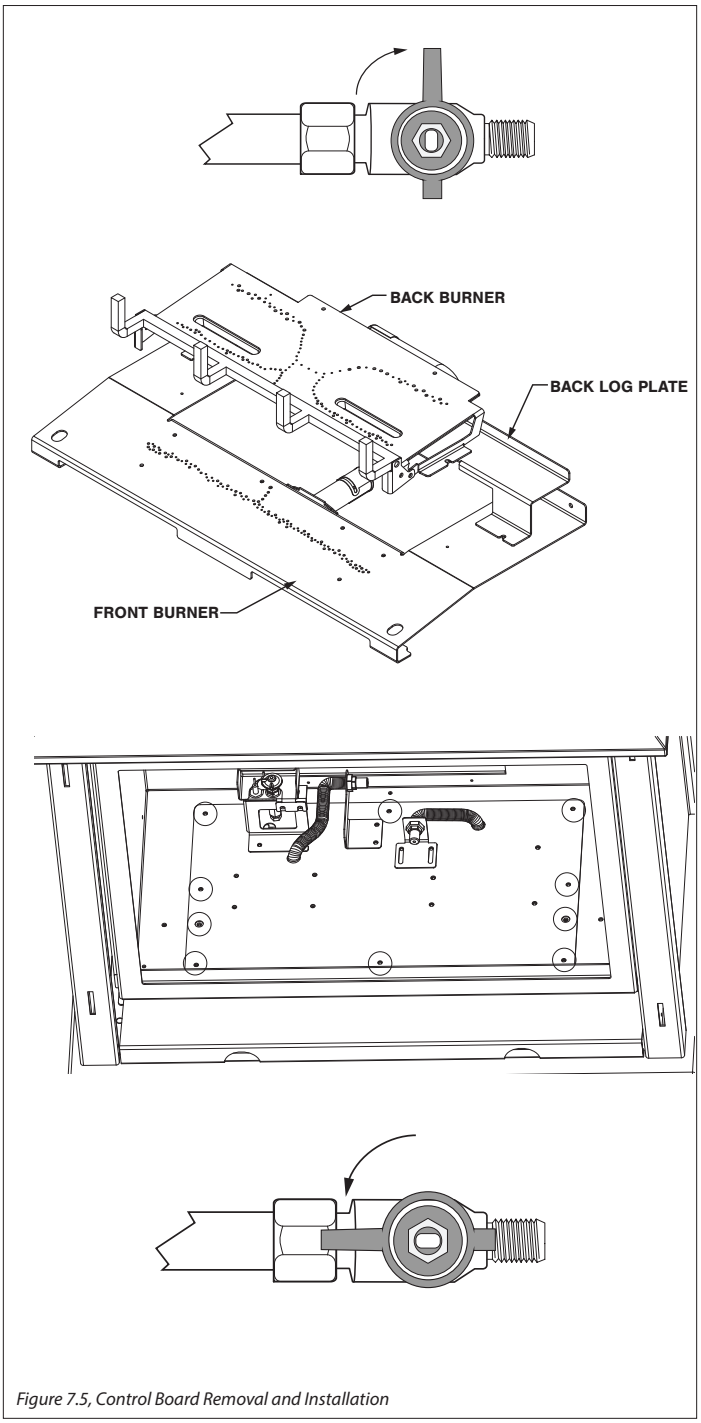

Figure 7.5, Control Board Removal and Installation

8.0 ELECTRICAL INFORMATION

WARNING: Do not use this fireplace if any part has been under water. Immediately call a qualified service technician to inspect this appliance and to replace any part of the control system and any gas control which has been under water.

WARNING - Electrical Grounding Instructions: This appliance is equipped with a three-prong (grounding) plug for your protection against shock hazard and should be plugged directly into a properly grounded three-prong receptacle. Do not cut or remove the grounding prong from this plug.

8.1 Electrical Specifications

WARNING: AN OPTIONAL COMPONENT CONNECTION IS FOR LOW VOLTAGE BATTERY OR DIRECT CURRENT ONLY. DO NOT CONNECT TO 120 OR 240 VOLTS AC.

This appliance, when installed, must be electrically grounded in accordance with local codes, or in the absence of local codes, with the National Electrical Code, ANSI/NFPA 70, or the Canadian Electrical Code, CSA C22.1.

- Determine if the appliance uses an electronic ignition system or continuous pilot ignition system (millivolt) by locating gas valve and its controls. Access the gas valve by opening the control compartment access panel.
- Appliances with the standing pilot ignition system are equipped with a black piezo igniter button. Appliances with electronic ignition system will not have a button.

8.2 Wiring Requirements

8.2.1 Electronic Ignition System

- The IFC System Module requires 120VAC power supply and/or batteries to operate. Using the battery back-up will operate the burner only. Optional components will not function on battery back up power.
- If desired, a thermostat or a wall switch may be installed for main burner operational control using low-voltage wires. A thermostat wire assembly is not included with this appliance.
- It is optional to disable the main ON/OFF rocker switch operating the main burner by disconnecting the wires from the control module (Figure 8.1).
- If the rocker switch wires are not disconnected, the main ON/OFF rocker switch must be in the OFF position for proper operation of optional controls. If the main ON/OFF rocker switch is ON, the main burner will operate until it is turned OFF by the rocker switch. The thermostat/wall switch components will not turn the main burner off if the main burner has been turned on by the rocker switch.
- If a the wall-mounted ON/OFF control or thermostat is to be used, mount it in a convenient location on a wall near the fireplace. Follow instructions included with assembly.
- If an optional component is to be used, run low-voltage wires from control module to the location of component.

8.2.2 Continuous Pilot Ignition System (Millivolt)

CAUTION: Do connect high voltage (115V) wire to the gas valve.

- The millivolt gas valve system does not require 110-120 VAC supply to operate.
- If desired, a thermostat or a wall switch may be installed for main burner operational control using low-voltage wires. A thermostat wire assembly is not included with this appliance.
- It is optional to disable rocker switch operating the main burner by disconnecting the wires from the back of the gas valve (Figure 8.3).
- If the rocker switch wires are not disconnected, the ON/OFF rocker switch must be in the OFF position for proper operation of optional controls. If the ON/OFF rocker switch is ON, the main burner will operate until it is turned OFF by the rocker switch. The thermostat/wall switch components will not turn the main burner off if the main burner has been turned on by the rocker switch.
- If a the wall-mounted ON/OFF control or thermostat is to be used, mount it in a convenient location on a wall near the fireplace. Follow instructions included with assembly.
- If an optional component is to be used, run low-voltage wires from gas valve to the location of component.

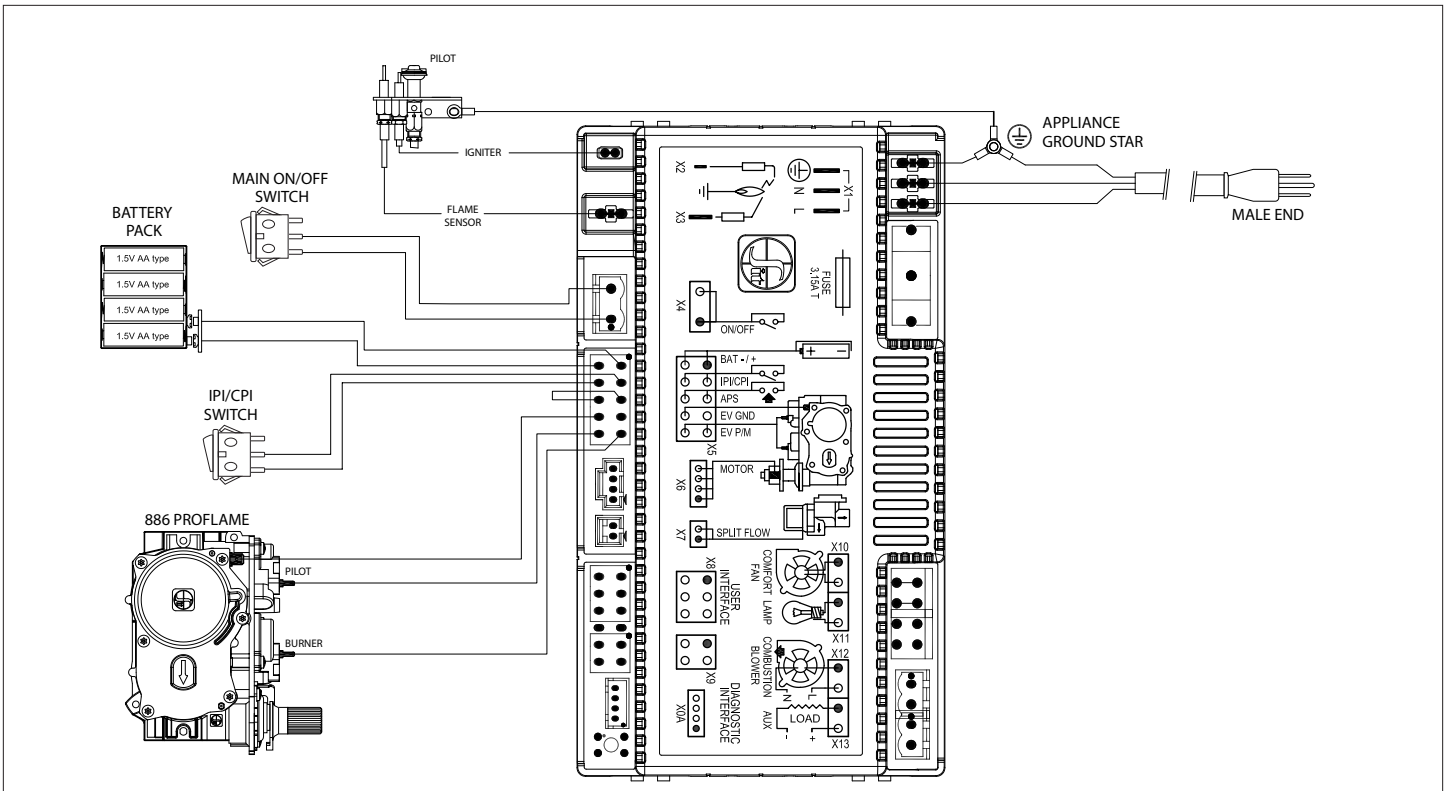

Figure 8.1, Electronic Gas Valve Wiring Schematic with ON/OFF Rocker Switch

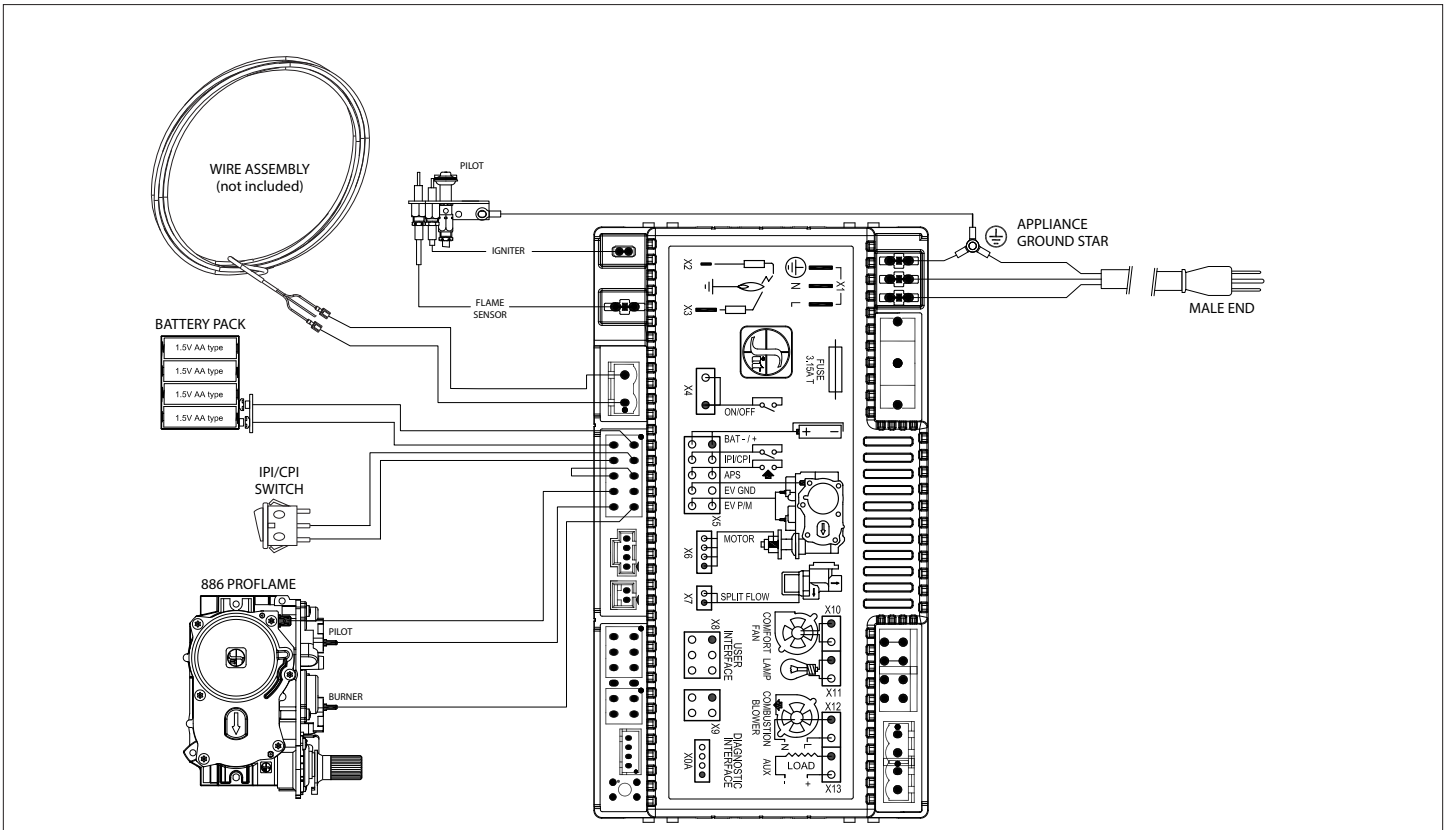

Figure 8.2, Electronic Gas Valve Wiring Schematic with Thermostat or Wall Switch Wiring

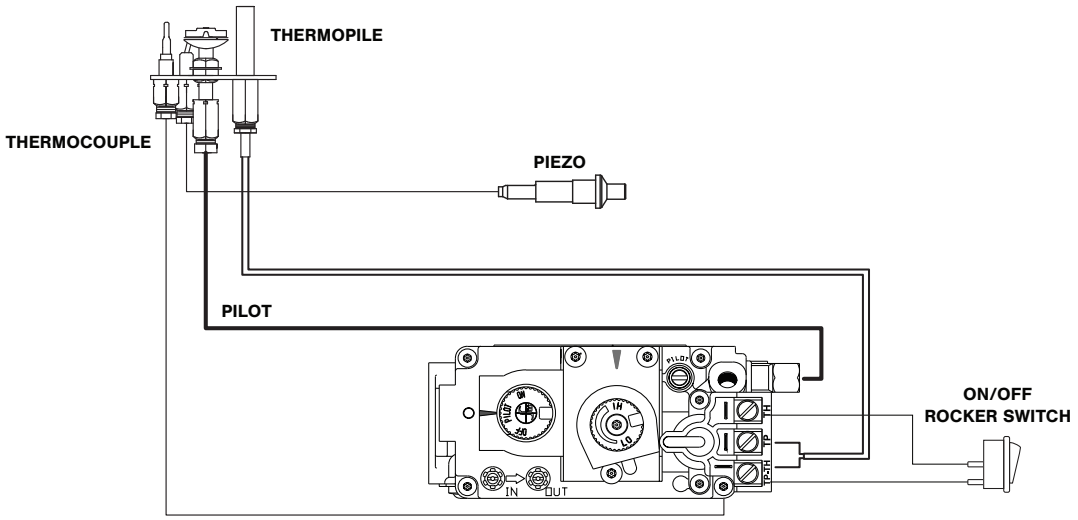

Figure 8.3, Millivolt Gas Valve Wiring Schematic with ON/OFF Rocker Switch

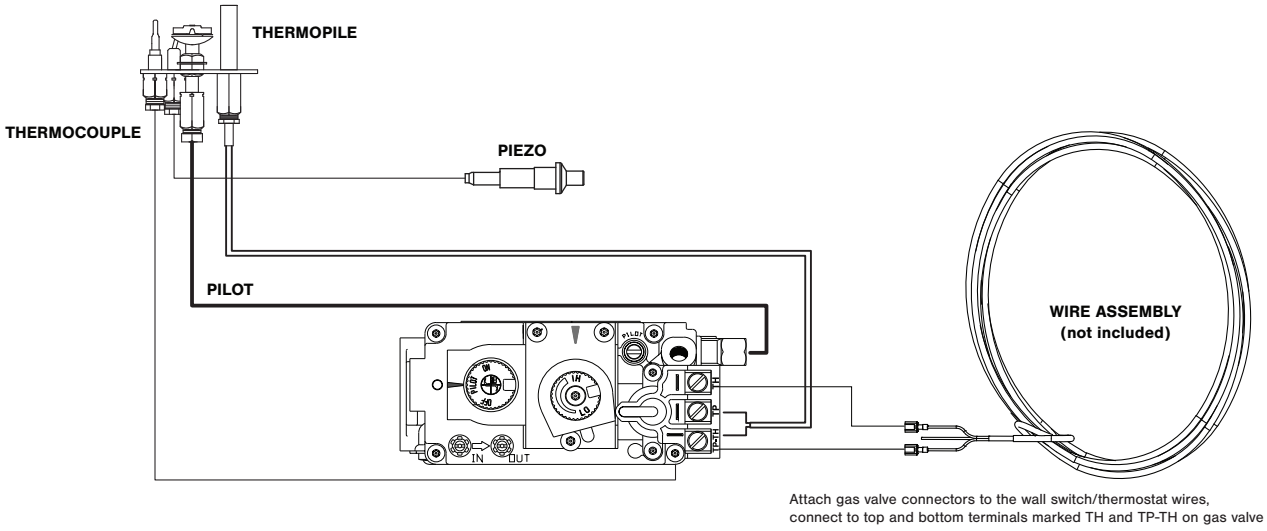

Attach gas valve connectors to the wall switch/thermostat wires, connect to top and bottom terminals marked TH and TP-TH on gas valve

Figure 8.4, Millivolt Gas Valve Wiring Schematic with Thermostat or Wall Switch Wiring

8.3 #BW20-028MV Optional Fan Kit

WARNING - Electrical Grounding Instructions: This appliance is equipped with a three-prong (grounding) plug for your protection against shock hazard and should be plugged directly into a properly grounded three-prong receptacle. Do not cut or remove the grounding prong from this plug.

WARNING: Installation of this fan kit should be done by a qualified installer. Verify household breaker is shut off prior to working on any electrical lines.

- This appliance, when installed, must be electrically grounded in accordance with local codes, or in the absence of local codes, with the National Electrical Code, ANSI/NFPA 70, or the Canadian Electrical Code, CSA C22.1.
- Hussong Manufacturing recommends to install an electrical outlet near the gas stove.

This kit includes:

(1) Fan assembly - mounted

Temperature control switch with magnet attached

(2) Philips head screws (black)

(4) Flange nuts

Speed control box with 8 ft cord

1. Locate (4) mounting studs underneath the rear of the gas stove. With the motor end facing to the right, slide the fan underneath the firebox. Align the (4) mounting slots in the fan bracket to the mounting studs under the firebox.
2. Lift up the fan and secure the fan assembly to the firebox with (4) flange nuts.
3. Mount the speed control box onto the left side of the gas valve bracket. Align the slots in the speed control box to the holes in bracket. Secure with (2) black philips head screws (included).
4. Place temperature control switch (magnet attached) onto the firebox floor on the right side of the fan.
5. Plug fan cord into the electrical box receptacle.
6. Plug the speed control box cord into a properly grounded three-prong receptacle.
7. Turn speed control counter-clockwise until it 'clicks'. This is the OFF position.
   Turn speed control ON by turning knob clockwise past the 'click' - this is the highest setting.

IMPORTANT: This fan will not operate unless speed control has been turned ON and sufficient heat has been applied to temperature control switch. The fan will turn ON and OFF automatically as fireplace heats and cools. Adjust fan to desired speed while it is running.

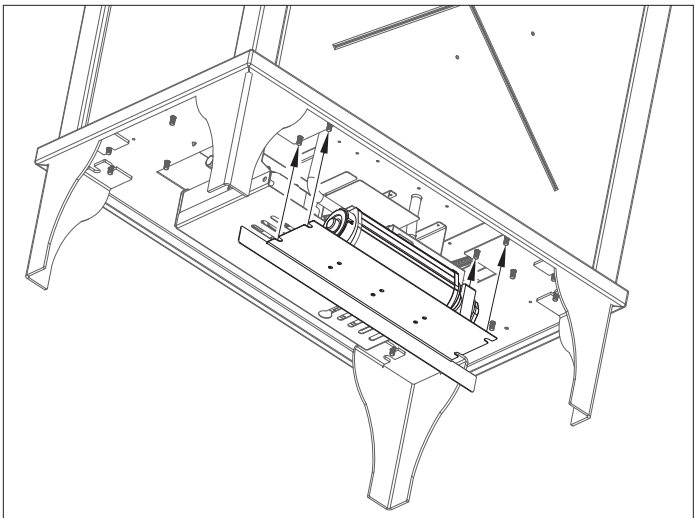

Figure 8.5, Mounting Stud Location (rear view)

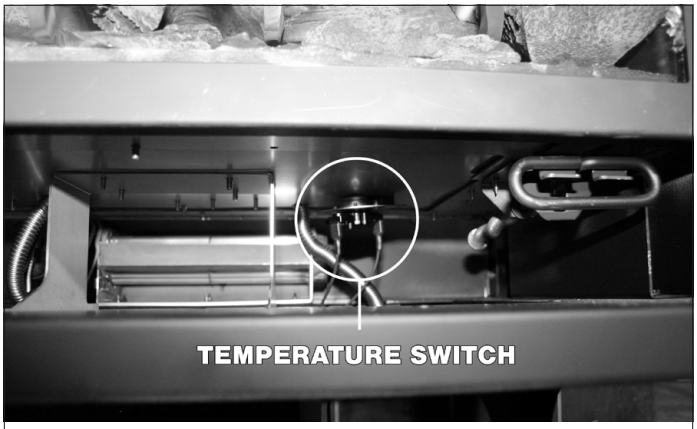

TEMPERATURE CONTROL SWITCH POSITION

Before adjusting temperature control switch, unplug 3-prong plug on fan cord from receptacle.

Adjust position of temperature control switch to a warmer location under firebox to turn fan ON sooner or move it to a cooler location under firebox to turn fan ON later. The fan will turn on when sensor in temperature control switch reaches 110° Fan will turn OFF when sensor reaches 90° F.

After adjustment, plug 3-prong plug on fan cord into receptacle.

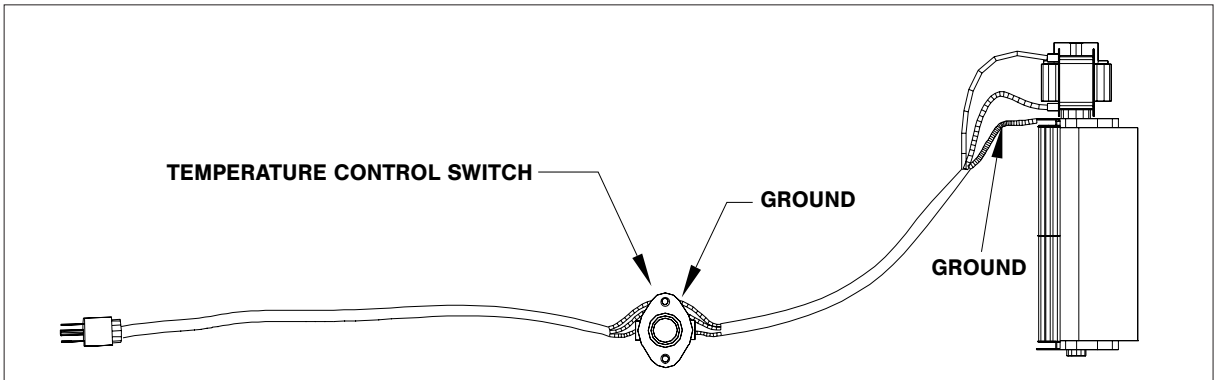

Figure 8.6, Fan Wiring

9.0 OPERATING INSTRUCTIONS

9.1 Lighting Instructions (#BIR-20-LE)

- When this fireplace is initially lit, condensation will appear on the glass. This is normal in all gas fireplaces and will disappear after several minutes.
- A paint smell will occur during the first few hours of burning. It is recommended to leave the fan off during this period to help speed the paint curing process.
- This fireplace may produce noises of varying degree as it heats and cools due to metal expansion and contraction. This is normal, and does not affect the performance or longevity of the fireplace.

FOR YOUR SAFETY READ BEFORE OPERATING

WARNING: If you do not follow these instructions exactly, a fire or explosion may result causing property damage, personal injury, or loss of life.

A. This appliance is equipped with an ignition device which automatically lights the pilot. Do not try to light the pilot by hand.

B. BEFORE OPERATING smell around the appliance area for gas. Be sure to smell next to the floor because some gas is heavier than air and will settle on the floor.

WHAT TO DO IF YOU SMELL GAS
- Do not try to light any appliance.
- Do not touch any electric switch; do not use any phone in your building.
- Immediately call your gas supplier from a neighbor's phone. Follow the gas supplier's instructions.
- If you cannot reach your gas supplier, call the fire department.

C. Use only your hand to turn the gas control manual valve. Never use tools. If the valve will not turn by hand, do not try to repair it; call a qualified service technician. Force or attempted repair may result in a fire or explosion.

D. Do not use this appliance if any part has been under water. Immediately call a qualified service technician to inspect the appliance and to replace any part of the control system and any gas control that has been under water.

WARNING

Do not operate appliance with the glass front removed, cracked, or broken. Replacement of the glass should be done by a licensed or qualified service person.

Under no circumstances should any solid fuel (wood, coal, paper, cardboard, etc.) be used in this appliance.

Children and adults should be alerted to the hazards of high surface temperature and should stay away to avoid burns or clothing ignition.

CAUTION

Clothing or other flammable material should not be placed on or near the appliance.

Young children should be carefully supervised when they are in the same room as the appliance. Toddlers, young children and others may be susceptible to accidental contact burns. A physical barrier is recommended if there are at risk individuals in the house. To restrict access to a fireplace or stove, install an adjustable safety gate to keep toddler, young children and other at risk individuals out of the room and away from hot surfaces.

OPERATING INSTRUCTIONS

STOP! Read all the safety information above on this page.

1. Set thermostat to lowest setting (if applicable).
2. Turn off all electric power to the appliance.
3. This appliance is equipped with an ignition device which automatically lights the pilot. Do not try to light the pilot by hand.
4. Locate the ON/OFF rocker switch. Press the ON/OFF rocker switch to "OFF".
5. Locate the manual valve installed by your qualified service technician.
6. Turn the manual valve clockwise ↷ to the OFF position.
7. Wait five (5) minutes to clear out any gas. Then, smell for gas, including near the floor. If you smell gas, STOP! Follow 'B' in the safety information above. If you do not smell gas, go to the next step.
8. Turn the manual valve counterclockwise ↶ to the ON position.
9. Press the ON/OFF rocker switch to "ON".
10. Turn on all electric power to the appliance.
11. Set thermostat to desired setting (if applicable).
12. If the appliance will not operate, follow the instructions, "To Turn Off Gas To Appliance" and call your service technician or gas supplier.

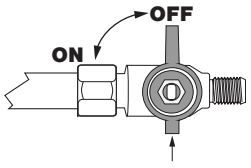

TO TURN OFF GAS TO APPLIANCE

1. Set thermostat to lowest setting (if applicable).
2. Turn off all electric power to the appliance if service is to be performed.
3. To access gas controls under the fireplace, open the control compartment access panel
4. Press the ON/OFF rocker switch to "OFF".
5. Locate the manual valve installed by your qualified service technician.
6. Turn the manual valve clockwise ↷ to OFF position.
7. Set the control compartment access panel back into position.

9.1.1 Pilot Ignition Selection (IPI/CPI)

Model #BIR-20-LE (electronic ignition system) has the option of a continuous (standing) pilot. This features allows the system to change from a intermittent pilot ignition (IPI) system to a continuous pilot ignition (CPI) system. The standing (or continuous) pilot will keep the firebox warm and establish a draft in the vent, which allows the main burner to ignite with less air-flow disruption.

There are (2) rocker switches located on the gas valve housing in the control compartment. The main burner rocker switch is marked 'B' and the IPI/CPI pilot rocker switch is marked 'P'.

- For intermittent pilot mode (IPI), set the IPI/CPI rocker switch to OFF. The pilot and main burner will ignite and turn off automatically when this IPI/CPI rocker switch is set to OFF.
- For continuous pilot mode (CPI), set the IPI/CPI rocker switch to ON. This will ignite the pilot only. The pilot will remain lit when the main burner ON/OFF rocker switch is pressed to OFF.

Figure 9.1, Rocker Switches

9.1.2 Flame Height and Heat Output Adjustment

Model #BIR-20-LE (electronic ignition system) is equipped with a manual HI/LO pressure modulator knob for adjusting main burner flame height and the heat output of the fireplace.

- Open the control compartment access panel to access the gas valve and the HI/LO pressure regulator knob.
- To adjust, turn the HI/LO knob counterclockwise to LO position or clockwise to HI position, until desired flame appearance and heat output is achieved.

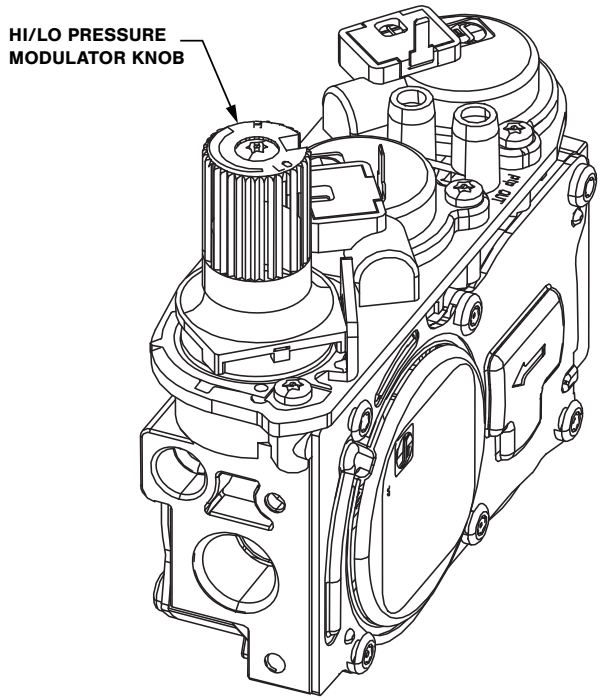

Figure 9.2, HI/LO Pressure Knob

9.2 Lighting Instructions (#BIR-20-MV)

- When this fireplace is initially lit, condensation will appear on the glass. This is normal in all gas fireplaces and will disappear after several minutes.
- A paint smell will occur during the first few hours of burning. It is recommended to leave the fan off during this period to help speed the paint curing process.
- This fireplace may produce noises of varying degree as it heats and cools due to metal expansion and contraction. This is normal, and does not affect the performance or longevity of the fireplace.

FOR YOUR SAFETY READ BEFORE LIGHTING

WARNING: If you do not follow these instructions exactly, a fire or explosion may result causing property damage, personal injury, or loss of life.

A. This appliance has a pilot which must be lighted by hand. When lighting the pilot, follow these instructions exactly.

B. BEFORE LIGHTING smell around the appliance area for gas. Be sure to smell next to the floor because some gas is heavier than air and will settle on the floor.

WHAT TO DO IF YOU SMELL GAS
- Do not try to light any appliance.
- Do not touch any electric switch; do not use any phone in your building.
- Immediately call your gas supplier from a neighbor's phone. Follow the gas supplier's instructions.
- If you cannot reach your gas supplier, call the fire department.

C. Use only your hand to push in or turn the gas control knob. Never use tools. If the knob will not push in or turn by hand, don't try to repair it, call a qualified service technician. Force or attempted repair may result in a fire or explosion.

D. Do not use this appliance if any part has been under water. Immediately call a qualified service technician to inspect the appliance and to replace any part of the control system and any gas control that has been under water.

WARNING

Do not operate appliance with the glass front removed, cracked, or broken. Replacement of the glass should be done by a licensed or qualified service person.

Under no circumstances should any solid fuel (wood, coal, paper, cardboard, etcetera) be used in this appliance.

Children and adults should be alerted to the hazards of high surface temperature and should stay away to avoid burns or clothing ignition.

CAUTION

Clothing or other flammable material should not be placed on or near the appliance.

Young children should be carefully supervised when they are in the same room as the appliance. Toddlers, young children and others may be susceptible to accidental contact burns. A physical barrier is recommended if there are at risk individuals in the house. To restrict access to a fireplace or stove, install an adjustable safety gate to keep toddler, young children and other at risk individuals out of the room and away from hot surfaces.

LIGHTING INSTRUCTIONS

1. STOP! Read all the safety information above on this page.
2. Set thermostat to lowest setting (if applicable).
3. Turn off all electric power to the appliance.
4. Push in gas control knob slightly and turn clockwise ↷ to "OFF".

   NOTE: Knob cannot be turned from "PILOT" to "OFF" unless knob is pushed in slightly. Do not force.
5. Wait five (5) minutes to clear out any gas. Then, smell for gas, including near the floor. If you smell gas, STOP! Follow 'B' in the safety information above. If you do not smell gas, go to the next step.
6. Locate pilot - follow metal tube from gas control. The pilot is located inside the combustion chamber.
7. Push in gas control knob slightly and turn counterclockwise ↶ to "PILOT".
8. Push in control knob all the way and hold. Press the piezo igniter button repeatedly until the pilot is lit and continue to hold in the gas control knob.
9. Hold the gas control knob in for one (1) minute after pilot is lit. Release knob and it will pop back up. Pilot should remain lit. If it goes out, repeat steps 5 through 10.
   - If the knob does not pop out when released, stop and immediately call your service technician or gas supplier.
   - If the pilot will not stay lit after several tries, turn the gas control knob to "OFF" and call your service technician or gas supplier.
10. Turn the gas control knob counterclockwise ↶ to "ON".
11. Turn on all electric power to the appliance.
12. Set thermostat to desired setting (if applicable).

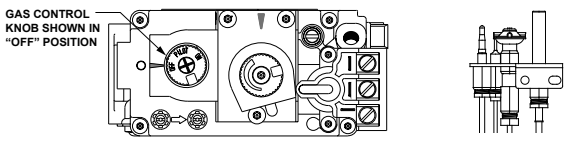

TO TURN GAS OFF TO APPLIANCE

1. Set thermostat to lowest setting (if applicable).
2. Turn off all electric power to the appliance if service is to be performed.
3. Push in gas control knob slightly and turn clockwise ↷ to "OFF".
4. Set the control compartment access panel back into position.

10.0 ADJUSTMENT

10.1 Gas Pressure Testing

NOTE: The appliance and its appliance main gas valve must be disconnected from the gas supply piping system during any pressure testing of the system at test pressures in excess of ½ psi (3.5 kPa).

IMPORTANT: Pressure check taps for manifold (outgoing) and inlet (incoming) pressure have been incorporated into the valve. The pressure tap marked OUT measures outgoing pressure. The pressure tap marked IN measures incoming pressure.

10.1.1 Electronic Gas Valve Pressure Testing

10.1.1.1 Inlet Pressure Test

NOTE: Make sure to apply these incoming pressure test with all other gas appliances on, or at full capacity in the house for proper pressure reading.

IMPORTANT: If the inlet pressure reading is too high or too low, contact the gas company. Only a qualified gas service technician should adjust incoming gas pressure.

1. Loosen the inlet (IN) pressure tap by turning screw counter-clockwise. See (A) in Figure 10.1.
2. Attach manometer using a ¼ in (6 mm) I.D. hose.
3. Set IPI/CPI rocker switch to CPI (ON).
4. Light pilot. Check manometer reading.
5. Press the main ON/OFF rocker switch to ON. Burner should light. Check pressure to ensure it is between the minimum and maximum recommended pressure settings.
6. Set IPI/CPI rocker switch to IPI (OFF). Press the main ON/OFF rocker switch to OFF. Pilot and burner should turn off.
7. Disconnect hose and tighten the inlet (IN) pressure tap by turning screw clockwise. Screw should be snug. Do not over tighten.
8. Relight pilot and burner. Then reattach manometer to the inlet pressure tap (A) to verify the tap is completely sealed. Manometer should read no pressure.

10.1.1.2 Manifold Pressure Test

1. Light pilot.
2. Loosen manifold (OUT) pressure tap by turning screw counter-clockwise. See (B) in Figure 10.1.
3. Attach manometer to pressure tap using a ¼ in (6 mm) I.D. hose.
4. Set IPI/CPI rocker switch to CPI (ON).
5. Press the main ON/OFF rocker switch to ON. Burner should light. Check manometer reading.
6. Set IPI/CPI rocker switch to IPI (OFF). Press the main ON/OFF rocker switch to OFF. Pilot and burner should turn off.
7. Disconnect manometer hose and tighten the manifold (OUT) pressure tap by turning screw clockwise. Screw should be snug. Do not over tighten.
8. Attach the manometer to the manifold pressure tap (B) to verify it is completely sealed. The manometer should read no pressure when pilot and burner are on.

Table 10.1, Pressure Requirements - BIR-20-LE (Electronic)

Gas Pressure	Natural Gas	Propane
Inlet Pressure Tap (A)	5″ - 10.5″WC (1.25 - 2.62 kPa)	12″ - 13″WC (2.99 - 3.24 kPa)
Manifold Pressure Tap (B)	1.6″ - 3.5″WC (0.41 - 0.87 kPa)	6.4″ - 10″WC (1.59 - 2.48 kPa)

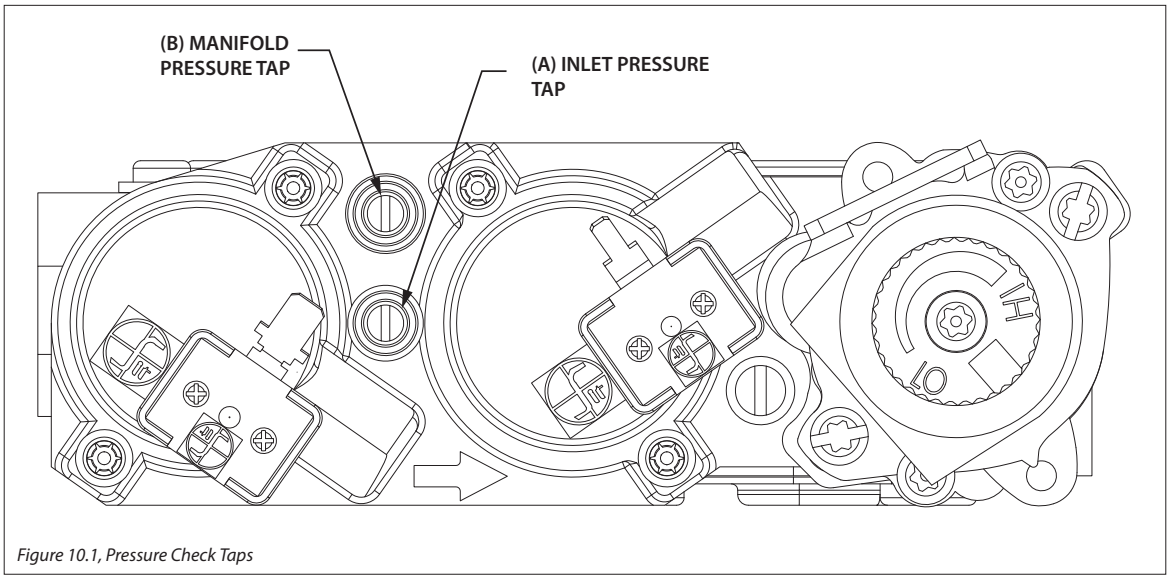

Figure 10.1, Pressure Check Taps

10.1.2 Millivolt Gas Pressure Testing

IMPORTANT: Pressure check taps for manifold (outgoing) and inlet (incoming) pressure have been incorporated into the valve. The pressure tap marked OUT measures outgoing pressure. The pressure tap marked IN measures incoming pressure.

10.1.2.1 Inlet Pressure Test

NOTE: Make sure to apply the incoming pressure test with all other gas appliances on, or at full capacity in the house for a proper pressure reading. If the inlet pressure reading is too high or too low, contact the gas company. Only a qualified gas service technician should adjust incoming gas pressure. A low pressure can cause a delayed ignition.

1. Loosen the inlet (IN) pressure tap by turning screw counterclockwise. See (A) in Figure 10.2.
2. Attach manometer using a ¼ in (6 mm) I.D. hose.
3. Light pilot.
4. Turn the gas control knob to ON. Burner should not light. Note manometer reading.
5. Press the ON/OFF rocker switch to ON. Check pressure to ensure it is near maximum inlet pressure.
6. Press the ON/OFF rocker switch to OFF.
7. Turn the gas control knob to OFF.
8. Disconnect hose and tighten the inlet (IN) pressure tap by turning screw clockwise. Screw should be snug. Do not over tighten.
9. Relight pilot and turn the gas control knob to ON. Reattach manometer to the inlet pressure tap (A) to verify the tap is completely sealed. Manometer should read no pressure.

10.1.2.2 Manifold Pressure Test

1. Light pilot.
2. Loosen manifold (OUT) pressure tap by turning screw counterclockwise. See (B) in Figure 10.2.
3. Attach manometer to pressure tap using a ¼ in (6 mm) I.D. hose.
4. Turn gas control knob to ON.
5. Press the rocker switch to ON and note manometer reading.
6. Disconnect manometer hose and tighten the manifold (OUT) pressure tap by turning screw clockwise. Screw should be snug. Do not over tighten.
7. Attach the manometer to the manifold pressure tap (B) to verify it is completely sealed. The manometer should read no pressure when the ON/OFF rocker switch is pressed to ON.

Table 10.2, Pressure Requirements - BIR-20-MV (Millivolt)

Gas Pressure	Natural Gas	Propane
Inlet Pressure Tap (A)	5″ - 10.5″WC (1.25 - 2.62 kPa)	11″ - 13″WC (2.74 - 3.24 kPa)
Manifold Pressure Tap (B)	1.6″ - 3.5″WC (0.41 - 0.87 kPa)	6.4″ - 10″WC (1.59 - 2.48 kPa)

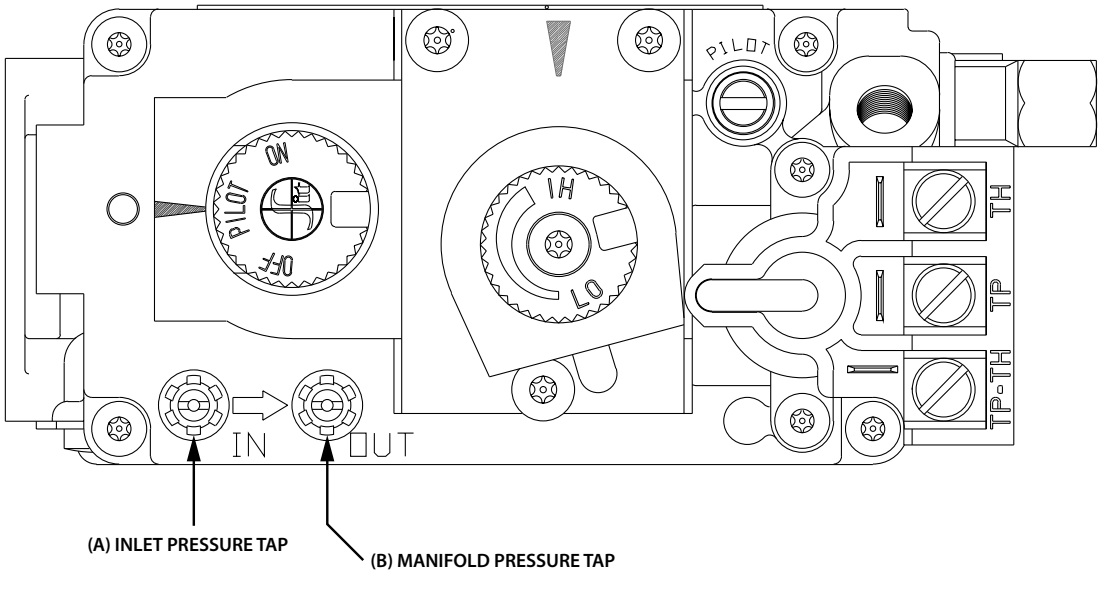

Figure 10.2, Pressure Check Taps Locations (Millivolt Gas Valve)

10.2 Burner Flame Adjustments

WARNING: To avoid property damage or personal injury, allow the fireplace ample time to cool before making any adjustments.

Burner flame appearance and characteristics are affected by altitude, fuel quality, venting configuration, and other factors. After installation, this appliance may need additional adjustments to achieve optimum flame appearance and visual aesthetics.

10.2.1 Burner Venturi

WARNING: VENTURI ADJUSTMENT MUST BE DONE BY A QUALIFIED SERVICE TECHNICIAN.

NOTE: Burner venturi air shutter settings have been factory set. Refer to Table 10.3.

When this appliance is first lit, the burner flames will appear blue. During the first 15 minutes of operation, flame appearance will gradually turn to the desired yellow appearance. If the flames remain blue, or become dark orange with evidence of sooting (black tips), adjustment of the air shutter opening may be necessary.

Regardless of venturi orientation, closing the air shutter will achieve a desired yellow flame, but may produce soot on the glass. Opening the air shutter will cause a short, blue flame that may lift off the burner.

Table 10.3, Factory Set Venturi Openings

Fuel	Front	Rear
Natural Gas	1/8" (3 mm)	1/8" (3 mm)
Propane	1/4" (6 mm)	1/2" (13 mm)

10.2.1.1 Venturi Adjustment

NOTE: If soot is present on the glass, check log positioning before adjusting the venturi. Logs must not block burner ports.

1. Remove the safety barrier, glass frame assembly.
2. Remove the log set and the back log plate (2) screws.
3. Remove the back burner (2) screws.
4. Remove the front burner (4) screws.
5. Loosen screw on venturis and adjust as necessary. Tighten screw.
6. Reinstall all components previously removed.

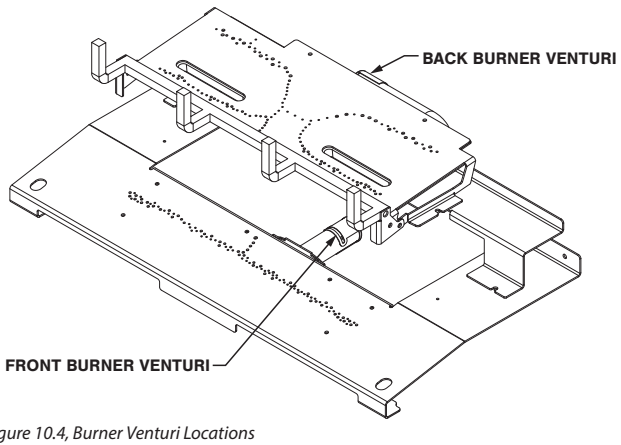

Figure 10.4, Burner Venturi Locations

IMPORTANT: Slight adjustments to the venturi opening will create dramatic results. Adjust at slight increments until desired look is achieved. Always burn the fireplace for at least 15 minutes, and allow the appliance ample time to cool before making any further adjustments.

Table 10.4, Venturi Adjustment Guidelines

Flame Characteristic	Cause	Solution
Dark, orange flame with black tips	Venturi closed too far	Open venturi slightly
Short, blue flames	Venturi open too far	Close setting slightly
Lifting (ghosting) flames	Gas pressure too high Venturi closed too far	Check manometer settings Open venturi setting slightly

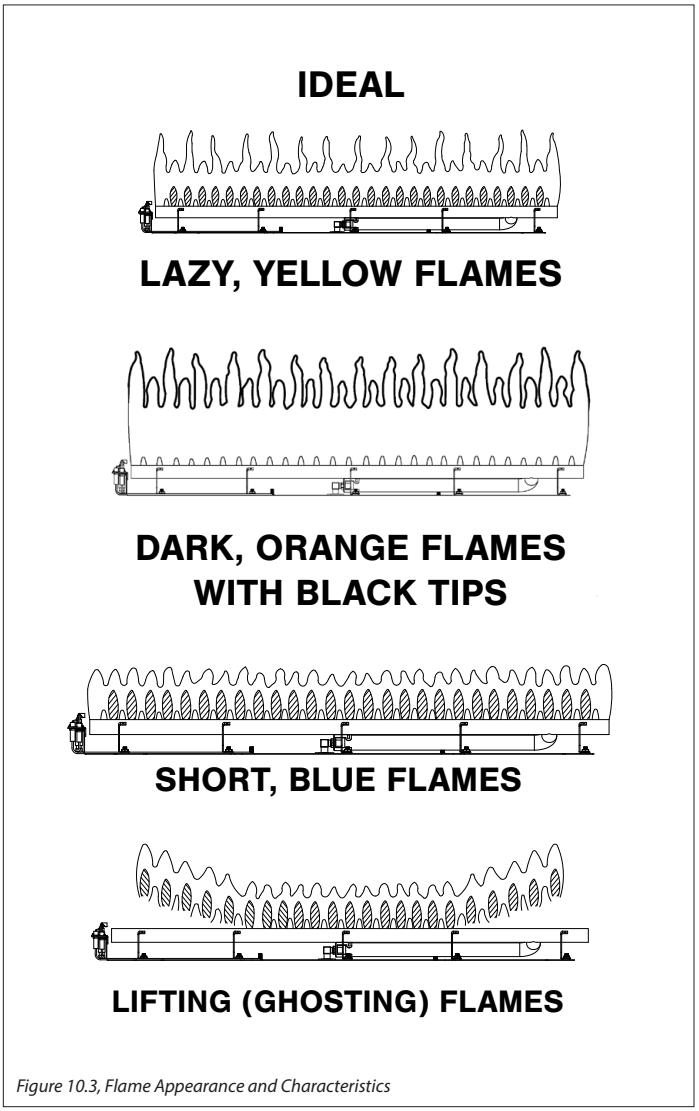

Figure 10.3, Flame Appearance and Characteristics

10.2.2 Vent Restriction

WARNING: To avoid property damage or personal injury, allow the fireplace ample time to cool before making any adjustments.

WARNING: Improper vent installation may cause the burner flames to lift or "ghost." Perform a visual check on flame appearance after restrictor adjustment to ensure proper performance.

Vertical terminations may display an active, compact flame. If this appearance is not desirable, a restrictor may need to be installed or modified after vent termination installation. Access to the vent exit for restriction can be reached through the fireplace baffle. Allow the fireplace to burn for 15 minutes before making any adjustments.

Table 10.5, Restrictor Adjustment Guidelines

Flame Appearance	Draft Problem	Solution
Short, flickering	Excessive draft Not enough restriction	Close baffle restrictor
		Install restrictor plate
Lifting or ghosting*	Insufficient draft	Open baffle restrictor
		Remove inner ring(s) on restrictor plate, or remove restrictor plate

*If flames continue to lift or ghost after opening the restrictor and verifying correct vent installation, shut off the gas supply and call a qualified service technician.

10.2.2.1 Baffle Restrictor Adjustment

1. Remove the safety barrier and glass frame assembly to access the baffle restrictor.
2. Remove and save (1) screw to adjust the baffle restrictor to achieve desired flame appearance.
3. Secure baffle restrictor with (1) screw previously removed.
4. Reinstall the glass frame assembly and safety barrier.

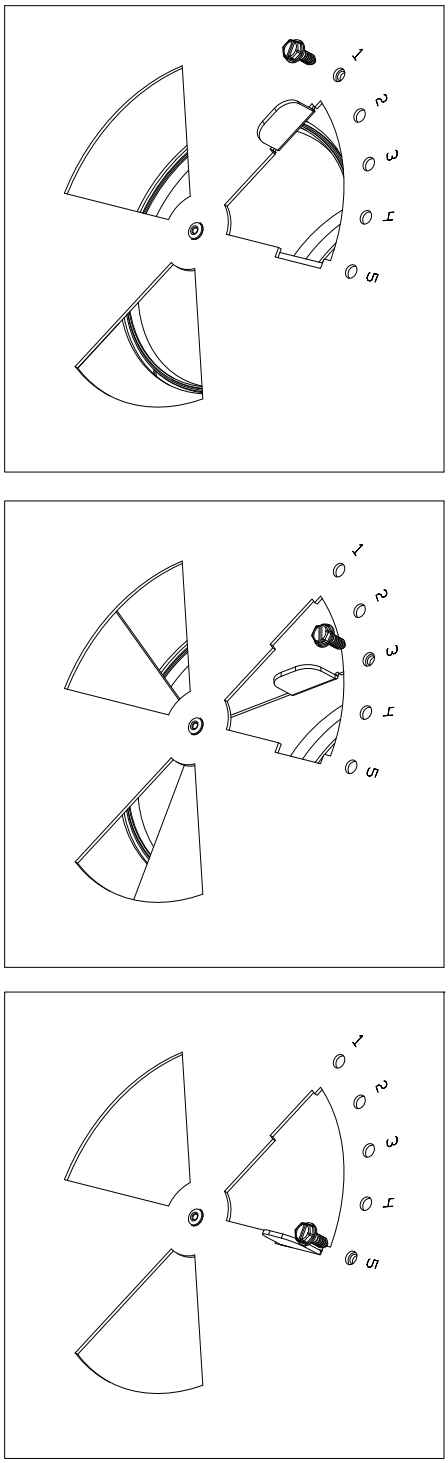

Figure 10.5, Baffle Restrictor Adjustments

10.2.2.2 Restrictor Plate Installation

1. Remove the safety barrier and the glass frame assembly.
2. Remove (4) screws at the firebox back wall securing the baffle. Remove baffle to access venting.
3. Bend the tabs on the restrictor plate (included in components packet) to approximately 80° angles. This will create tension when the restrictor is inserted into the exhaust pipe.
4. Insert restrictor into the 4 in (102 mm) exhaust pipe with the tabs pointing towards you.
5. Reinstall baffle by resting the front of the baffle above flange along the inside top of firebox opening. Tip the baffle against the firebox back wall, and secure with (4) screws previously removed.
6. Reinstall all components previously removed.

10.2.2.3 Restrictor Plate Modification

1. Remove the safety barrier and the glass frame assembly.
2. Remove (4) screws at the firebox back wall securing the baffle. Remove baffle to access venting.
3. Remove the restrictor by pulling it down and out of the 4 in (102 mm) exhaust pipe. Make necessary modifications to achieve desired flame appearance.
4. Insert restrictor into the 4 in (102 mm) exhaust pipe with the tabs pointing towards you.
5. Reinstall baffle by resting the front of the baffle above flange along the inside top of firebox opening. Tip the baffle against the firebox back wall, and secure with (4) screws previously removed.
6. Reinstall all components previously removed.

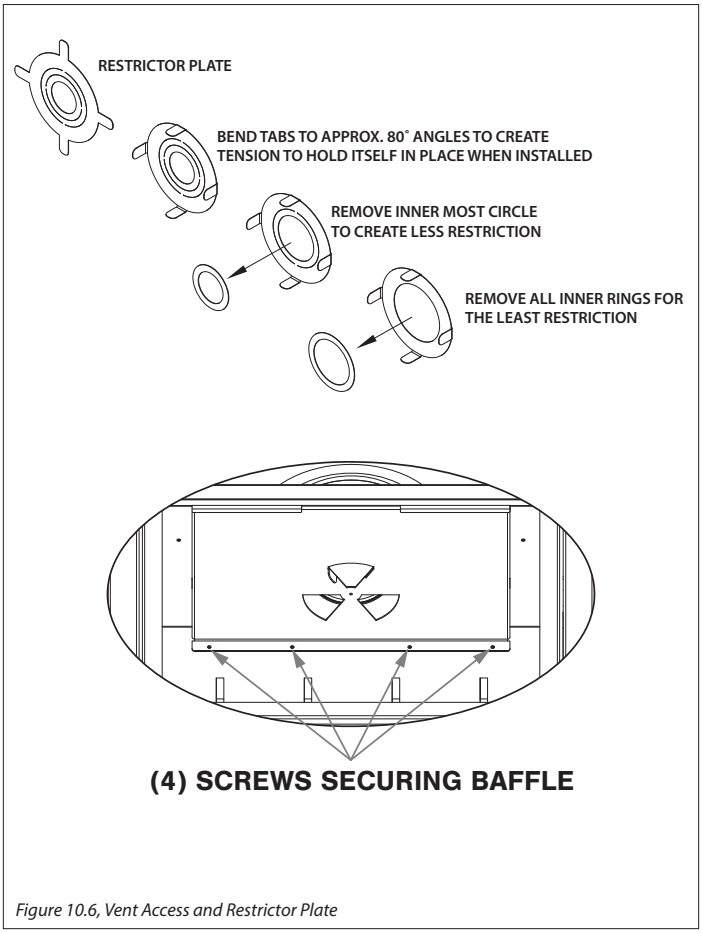

Figure 10.6, Vent Access and Restrictor Plate

11.0 TROUBLESHOOTING

11.1 Electronic Ignition System

ATTENTION: Troubleshooting must be performed by a qualified technician.

Before proceeding with the steps in the following troubleshooting guide,

- Verify proper 120VAC power supply to the control module.
- Verify the control module battery pack batteries (not included) are fresh and installed with correct polarity.
- Verify all connections between the wire harnesses and the system components are proper and positive.
- Verify inlet pressure meets the recommended inlet pressure. If necessary, adjust line pressure regulator.

Issue	Cause	Solution
Pilot will not light	Electrical power interrupted or disconnected	Restore electrical power to appliance or use battery back-up.
	Wiring disconnection	Ensure batteries are fully charged if using battery back-up as power source. Use wiring schematic in this manual to determine that all wiring connections are secure and correct.
	Gas supply turned off	Check remote shut-off valves from the appliance. Usually there is a valve near the main gas line. There may be more than (1) valve between the appliance and main gas line.
Pilot will not stay lit	No propane in tank	Check propane tank. Refill if necessary.
	Low gas pressure	Consult a plumber or a gas supplier. Can be caused by situations such as a bent line, too narrow diameter or pipe, or a low line pressure.
	Pilot flame not making contact with the flame rectification sensor on the pilot assembly	Verify the pilot flame envelopes the top of the flame sensor and extends far enough onto burner for ignition. To adjust pilot flame, turn pilot adjustment screw on the gas valve clockwise to decrease flame, and counterclockwise to increase flame.
	Pilot adjustment screw not sealed	Seal pilot adjustment screw. Do not over-tighten.
Pilot flame always on, or will not extinguish	Control system set to CPI mode	Set control system to IPI mode.
Main burner flame will not light	ON/OFF rocker switch in OFF position	Switch rocker switch to ON position.
	Gas supply turned off	Check for multiple shut-offs in the supply line. Verify gas supply is turned on.
	Low gas supply	Consult with plumber or gas supplier. Check propane tank. Refill if necessary.
	Wiring disconnection or improper wiring	Check for faulty or incorrect wiring.
	Plugged main burner orifice	Remove blockage.
	Pilot flame	Verify the pilot flame is properly directed to ignite burner. See pilot flame troubleshooting above.

Issue	Cause	Solution
Pilot and burner extinguish while in operation	No propane in tank	Check propane tank. Refill if necessary.
	Incorrect glass assembly installation	Refer to section 7.2 Glass Frame Assembly on page 24.
	Incorrect vent cap installation	Adjust if necessary.
	Vent cap blockage	Remove debris if necessary.
	Improper pitch on horizontal venting	¼ in. (6 mm) rise per foot (30 cm) is required on horizontal venting
	Exhaust vent pipe leaking exhaust gases back into firebox	Check for leaks and repair if necessary.
	Excessive draft	A restrictor may need to be installed or modified. Refer to Section 10.2.2 Vent Restriction on page 37.
Soot appears on glass	Improper log placement	Refer to Section 7.3 #BW20-500 Log Set Installation on page 25.
	Improper venturi setting	Venturi air shutter may need to be opened slightly to allow more air into the gas mix. Refer to Section 10.2.1 Burner Venturi on page 36.
	Incorrect vent cap installation	Adjust if necessary.
	Vent cap blockage	Remove debris if necessary.
Flame burns blue and lifts off burner	Improper venturi setting	Venturi air shutter may need to be opened slightly to allow more air into the gas mix. Refer to Section 10.2.1 Burner Venturi on page 36.
	Incorrect vent cap installation	Adjust if necessary.
	Blockage or leakage of the vent system	Check the vent pipes for leaks, and the vent cap for debris. Repair the vent pipes or remove debris from vent cap, if necessary.
No reaction to command	Battery back up batteries low	Replace batteries.

11.2 Continuous Pilot Ignition (Millivolt) System

ATTENTION: Troubleshooting must be performed by a qualified technician.

Issue	Cause	Solution
No spark from electrode to pilot when piezo button is triggered	Piezo igniter wiring disconnection	Verify piezo igniter is properly grounded. Tighten mounting fastener, if required.
		Check and repair, if necessary, the wire connections between the piezo igniter and igniter electrode.
	Check wiring disconnection	Check wiring at back of electrode igniter for proper connection.
	Incorrect electrode position	Verify there is a 1/8 in (3 mm) gap between the electrode and pilot. Readjust if necessary. Direct metal contact may cause an arc below the electrode and along the electrode wire.
Spark igniter will not light after repeated triggering of piezo button	No gas	Check for multiple shut-off valves in the supply line.
		Check propane tank for gas supply. Refill if necessary.
Pilot will not stay lit after carefully following lighting instructions	Pilot flame does not impinge on thermocouple	Clean pilot hood
		Adjust pilot flame at gas valve for proper flame impingement.
	Loose thermocouple connection	Ensure thermocouple connection at gas valve is full inserted and tight - hand tight plus 1/4 turn.
	Thermocouple reading below 15 millivolts	Disconnect the thermocouple from valve. Place one millivolt meter lead wire on the end of the thermocouple, and the other millivolt meter lead wire on the thermocouple's copper wire. Start the pilot while holding the gas valve control knob in. If the millivolt reading is less than 15 millivolts, replace thermocouple.
	Thermopile not generating sufficient millivolts	Adjust, if necessary, the pilot flame to envelope thermopile.
		Check thermopile connections are properly wired to the gas control valve. Tighten if necessary.
		Measure millivolt production with a millivolt meter. Turn remote/ thermostat/wall switch, or ON/OFF rocker switch to OFF. Turn the gas valve control to the PILOT position (pilot should remain lit). Take millivolt reading at TH-TP and TP terminals on gas valve. Reading should be 350 millivolts, minimum. If reading is less than 350 millivolts, replace thermopile.
Frequent pilot outages	Pilot shield not installed	Install pilot shield.
	Pilot safety dropout	Pilot flame is too high or too low. Clean pilot hood and adjust pilot flame for maximum flame impingement on thermopile.

Issue	Cause	Solution
Burner will not light	Lighting instructions not followed	Turn gas control knob to ON position. Turn the ON/OFF rocker switch to ON position. Put wall switch, remote control, or thermostat in heat demand position.
	Plugged main burner orifice	Remove blockage as necessary.
	Switching device is defective	Check remote, thermostat, or wall switch wires for proper connection. Place jumper wires across terminals at switch. If the burner lights, replace the defective switch, thermostat, or batteries in remote control as necessary. If switching device checks out as described above, place jumper wires across switches on the gas valve. If the burner lights, the switching wires are faulty or connections are bad. Replace as necessary.
Burner will not stay lit	Thermopile wires loose at valve terminals	Tighten if necessary.
	Thermopile wires ground out due to pinched wires	Free pinched wires if necessary.
	Improper refractory panel placement (if installed)	Refractory panels must be tight against firebox walls. It may be necessary to secure panels with high-temperature sealant, especially around the intake duct.
Pilot and burner extinguish while in operation	No propane in tank	Check propane tank. Refill if necessary.
	Incorrect glass frame assembly installation	Refer to section 7.2 Glass Frame Assembly on page 24.
	Improper pitch on horizontal venting	¼ in (6 mm) per 12 in (30 cm) is required on horizontal venting
	Defective thermopile or thermocouple	Check thermopile and thermocouple for proper millivolts
	Inner vent pipe leaking exhaust gases back into firebox	Check for leaks and repair if necessary.
	Vent cap blockage	Remove debris if necessary.
	Excessive draft	A restrictor may need to be installed or modified. Refer to Section 10.2.2 Vent Restriction on page 37.
Glass sooting	Improper log placement	Refer to Section 7.3 #BW20-500 Log Set Installation on page 25.
	Improper venturi setting	Venturi may need to be opened slightly to allow more air into the gas mix. Refer to Section 10.2.1 Burner Venturi on page 36.
	Incorrect vent cap installation	Adjust if necessary.
	Vent cap blockage	Remove debris if necessary.
Flame burns blue and lifts off burner	Improper venturi setting	Venturi may need to be opened slightly to allow more air into the gas mix. Refer to Section 10.2.1 Burner Venturi on page 36.
	Incorrect vent cap installation	Adjust if necessary.
	Blockage or leakage of the vent system	Check the vent pipe for leaks, and the vent cap for debris. Repair vent pipe or remove debris from vent cap if necessary.

12.0 MAINTENANCE

ATTENTION: Installation and repair should only done by a qualified service person. The appliance should be inspected before use and at least annually by a professional service person. More frequent cleaning might be required due to excessive lint from carpeting, bedding material, et cetera. It is imperative that control compartments, burners, and circulating air passageways of the appliance be kept clean. Use a vacuum to clean all components.

WARNING: The appliance area must be kept clear and free from combustible materials, gasoline and other flammable vapors and liquids.

12.1 Firebox

Performed by: Qualified Service Person

Frequency: Annually

Action:

- Vacuum and clean any debris in the firebox that is not supposed to be there.
- Inspect and operate the bottom latch assembly. Verify the assembly is free from obstruction to operate. The handles must have spring tension but be able to move forward freely.

12.2 Fan (optional)

CAUTION: Label all wires prior to disconnection when servicing controls. Wiring errors can cause improper and dangerous operation. Verify proper operation after servicing.

Performed by: Qualified Service Person

Frequency: Every 6 months

Action:

- Disconnect the fan from electrical current and vacuum.
- The bearings are sealed and require no oiling.

12.3 Vent System

NOTE: If the vent-air intake system is disassembled for any reason, reinstall per instructions provided with installation. Refer to Section 6.0 Venting on page 20.

Performed by: Qualified Service Person

Frequency: Annually

Action:

- Examination of the vent system is required.
- The flow of combustion and ventilation air must not be obstructed.

12.4 Glass Assembly

CAUTION: Do not operate appliance with the glass assembly removed, cracked, or broken. Use protective gloves to handle any broken or damaged glass assembly components.

WARNING: Do not use substitute materials.

WARNING: Avoid striking or slamming glass assembly. Avoid abrasive cleaner. DO NOT clean glass while it is hot.

IMPORTANT: Any safety screen, guard, or barrier removed for servicing the appliance must be replaced prior to operating the appliance.

Performed by: Homeowner

Frequency: Annually

Action:

- Prepare a work area large enough to accommodate the glass assembly on a flat, stable surface.
- Remove safety screen and glass frame assembly.
- Clean glass window with a suitable fireplace glass cleaner using a soft cloth. Abrasive cleaners must not be used. Be careful not to scratch the glass when cleaning.
- Reinstall glass assembly and safety screen.
- Any safety screen, guard, or barrier removed for servicing the appliance must be replaced prior to operating the appliance.

Performed by: Qualified Service Person

Frequency: Annually

Action:

- Clean glass window with a suitable fireplace glass cleaner using a soft cloth. Abrasive cleaners must not be used. Be careful not to scratch the glass when cleaning.
- Inspect the glass for cracks, scratches, and nicks.
- Verify the glass assembly is properly intact and not damaged.
- Replace the glass and the assembly #701-013T as necessary.
- Only Hussong Mfg. Co., Inc. will supply the replacement of glass assembly as a complete unit.

12.5 Burner and Pilot System

The burner assembly may be removed for easier access to the control compartment. Refer to 7.4 Control Board Removal and Installation on page 26. Verify gas supply is turned on and filled. Consult with plumber or gas supplier as necessary.

Performed by: Qualified Service Person

Frequency: Annually

Action:

- Vacuum all components of the burner system.
- Check all accessible gas-carrying tubes, connections, pipes and other components for leaks.
- Inspect the operation of the flame safety system Pilot or Flame rectification device. Visually check pilot light when in operation.
- Continuous Pilot Ignition System (Millivolt): Ensure pilot flame impinges on thermocouple. Clean pilot hold and adjust pilot flame at gas valve for proper flame impingement. Verify thermocouple connections and millivolt production.
- Inspect and ensure the lighting of the main burner occurs within (4) seconds of the main gas valve opening. Check for faulty or incorrect wiring and correct or replace as necessary. Inspect primary air openings (burner ports) for blockage, especially near the pilot.
- Visually check burner flame pattern when in operation. Flames should be steady, not lifting or floating.
- Test and measure the flame failure response time of the flame safety system. It must de-energize the safety shutoff in no more than (30) seconds.

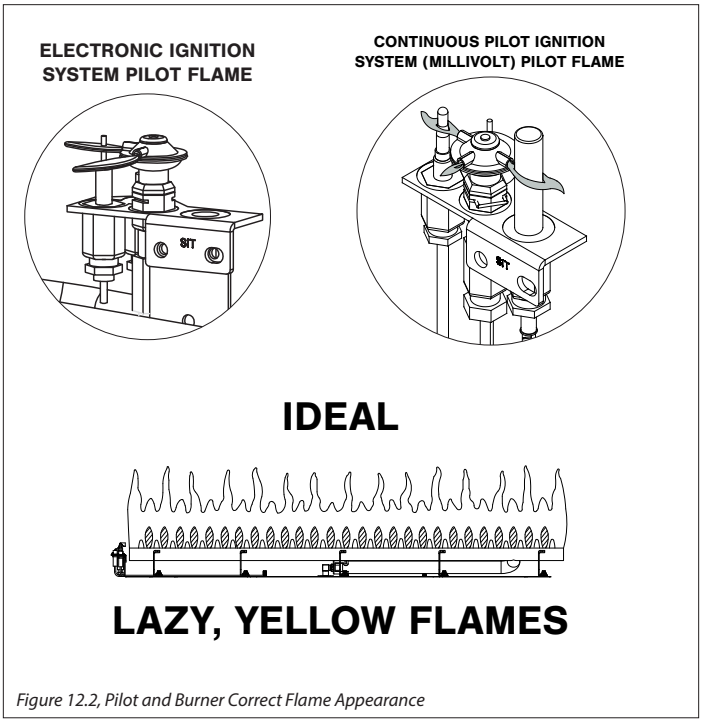

Figure 12.2, Pilot and Burner Correct Flame Appearance

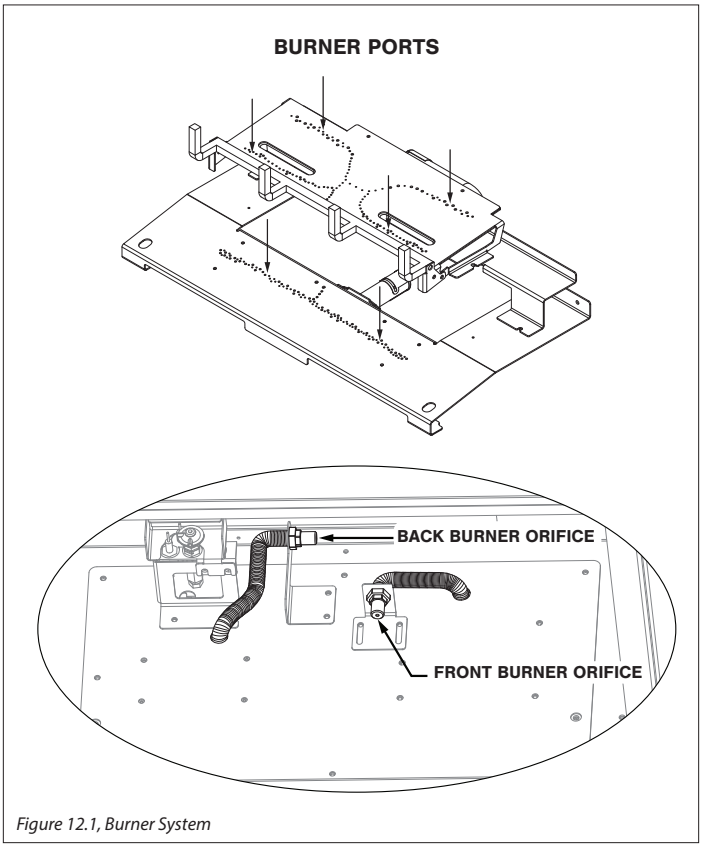

Figure 12.1, Burner System

13.0 REPLACEMENT PARTS LIST

Replacement parts are available through your local dealer. Contact your local dealer for availability and pricing.

The following warning is for replacement parts for this appliance.

WARNING: This product can expose you to chemicals including Lead, which is [are] known to the State of California to cause cancer, birth defects, or other reproductive harm. For more information, visit www.P65Warnings.ca.gov.

BIR-20-LE CONTROL BOARD AND PARTS			
Control Board - Natural Gas	BW20-140	S.I.T. IPI Pilot Hood	700-598
Control Board - Propane	BW20-141	18 in. Flexible Gas Line - Black	700-213B
S.I.T. IPI Gas Valve - Natural Gas	700-600	Flexible Gas Line - Valve to Burner Connection	700-226F
S.I.T. IPI Gas Valve - Propane	700-600-1	NG Burner Orifice #.0625 FRONT	700-625
Proflame 2 IFC Board	700-758	NG Burner Orifice #44 BACK	700-244
IFC Wire Harness Assembly	700-602	Propane Burner Orifice #61 FRONT	700-261
On/Off Rocker Switch	700-023	Propane Burner Orifice #54 BACK	700-254
Proflame 2 On/Off Wire Harness	700-656	Conversion Kit - Natural Gas	NCK-BW20LE-S
Pilot Assembly - Natural Gas	700-551	Conversion Kit - Propane	LCK-BW20LE-S
Pilot Assembly - Propane	700-551-1	Front Burner	BW20-350
Pilot Orifice - Natural Gas #62	700-166	Back Burner	BW20-351
Pilot Orifice - Propane #35	700-168	Log Plate	BW20-352

BIR-20-MV CONTROL BOARD AND PARTS			
Control Board - Natural Gas	BW20MV-770	S.I.T. Millivolt Pilot Hood	700-098
Control Board - Propane	BW20MV-771	S.I.T. Millivolt Quick Change Screw	900-QCS
S.I.T. Gas Valve - Natural Gas	700-086N	18 in. Flexible Gas Line - Black	700-213B
S.I.T. Gas Valve - Propane	700-087A	Flexible Gas Line - Valve to Burner Connection	700-226F
On/Off Rocker Switch	700-023	NG Burner Orifice #.0625 FRONT	700-625
Pilot/Generator/Thermocouple - Natural Gas	700-088	NG Burner Orifice #44 BACK	700-244
Pilot/Generator/Thermocouple - Propane	700-089	Propane Burner Orifice #61 FRONT	700-261
Piezo Igniter with nut (no wire)	700-090	Propane Burner Orifice #54 BACK	700-254
Flexible Pilot Tubing (valve to pilot)	700-091	Conversion Kit - NG	OCK-S44625A
Millivolt Generator	700-092	Conversion Kit - Propane	OCK-S5461A
Thermocouple	700-058	Front Burner	BW20-350
Pilot Orifice - Natural Gas	700-165	Back Burner	BW20-351
Pilot Orifice - Propane	700-095	Log Plate	BW20-352

Hussong Manufacturing Co., Inc.
P.O. Box 577
204 Industrial Park Drive
Lakefield, MN 56150-0577
USA
BIR-20-MV and BIR-20-LE

GLASS AND GLASS GASKET	
15-3/4" x 21-5/8" Standard Glass with Gasket	701-013T
1-1/8" Glass Gasket	900-006
Valance	BW20-005

FAN KIT	
Fan Kit	BW20-028MV

SAFETY BARRIERS	
Full Rectangular Screen Front	BW20-FRSF
Prairie Screen Front	BW20-PSF
Arched Mission Screen Front	BW20A-MSF

LEG AND BASE KITS	
Traditional Leg Kit	BW20-TLK
Contemporary Base Kit	BW20-CBK
Pedestal Base Kit	BW20-PBK

LOG SET	
7 Piece Log Set	BW20-500
Ember panel	BW20-900E
#BW20 1 Log	BW20-1
#BW20 2 Log	BW20-2
#BW20 3 Log	BW20-3
#BW20 4 Log	BW20-4
#BW20 5 Log	BW20-5
#BW20 6 Log	BW20-6
Rock Wool Embers	900-REMB

ADDITIONAL COMPONENTS	
4 in Restrictor Plate	900-085
Manual Gas Shut-off Valve	700-203

Hussong Manufacturing Co., Inc.
P.O. Box 577
204 Industrial Park Drive
Lakefield, MN 56150-0577
USA
BIR-20-MV and BIR-20-LE

LIMITED LIFETIME WARRANTY

Warranty Coverage

Hussong Manufacturing Company, Inc. (Hussong Mfg.) warrants this Kozy Heat gas appliance from the date of purchase to the original purchaser, that it is free of defects in materials and workmanship at the time of manufacture. Registering your fireplace warranty does not require any documents to be sent in to Hussong Mfg. Please retain your proof of purchase reflecting the date of purchase along with the serial number and model of your fireplace for any future warranty claims.

If a defect is noted within the warranty period, the customer should contact their authorized dealer for service within 30 days.

30 Days: Parts & Labor*

- Paint
- Light bulbs
- Gasket material
- Glass media and media dam

Year 1: Parts & Labor*

- All parts and material except the items listed in the 30 day warranty and any exclusions or limitations that may apply.

Hussong Mfg. will issue labor reimbursement to an authorized dealer only. Hussong Mfg. will not be liable for charges occurred as a result of any service performed by a non-authorized service provider, without pre-authorization.

Years 2 through Lifetime: Parts Only

- Firebox
- Heat Exchanger
- Logs
- Burner tube or pan
- Outer shell
- Heat shield(s)
- Front Viewing Glass (thermal shock only)
- Refractory Firebox liner (excluding enamel and glass panels)

EXCLUSIONS AND LIMITATIONS

1. This appliance must be installed by a licensed, authorized service technician or contractor. It must be installed, operated and maintained at all times in accordance with the instructions in the owner's manual or the warranty is void.
2. This warranty is nontransferable and is made to the original purchaser only.
3. This warranty excludes standard wear and tear of the appliance which is considered normal usage over time.
4. Discoloration and some minor expansion, contraction or movement of certain parts, resulting in noise, is normal and not a defect.
5. Warranty is automatically voided if the appliance's serial number and/or testing label is removed or if the appliance is altered or tampered with in any way.
6. Warranty is void if the appliance is subject to submersion in water or prolonged periods of dampness or condensation. Any damage to any part of the appliance due to water or weather damage which is the result of, but not limited to, improper chimney/venting installation will also render this warranty void.
7. This warranty does not cover installation and operational related problems such as environmental conditions, nearby trees, buildings, hilltops, mountains, inadequate venting or ventilation, excessive offsets, negative air pressures caused by any mechanical systems.
8. Chimney components and other Non-Hussong Mfg. accessories used in conjunction with the installation of this appliance are not covered under this warranty.
9. Damage to plated surfaces or accessories, if applicable, caused by scratches, fingerprints, melted items or other external sources left on the surfaces from the use of cleaners is not covered under this warranty.
10. It is expressly agreed and understood that this warranty is Hussong Mfg.'s sole obligation and purchaser's exclusive remedy for defective fireplace equipment. Hussong Mfg. is free of liability for any damages caused by this appliance, as well as inconvenience expenses and materials. Incidental or consequential damages are not covered by this warranty. In some states, the exclusion of incidental or consequential damage may not apply. Hussong Mfg. shall not be held to implied warranties and this warranty shall replace all previous warranties.
11. This limited lifetime warranty is the only warranty supplied by Hussong Mfg. Any warranties extended to the purchaser by the dealer/distributor, whether expressed or implied, are hereby disclaimed and the purchaser's recourse is expressly limited to the warranties set forth herein.
12. Any part repaired or replaced during the limited warranty period will be warranted under the terms of the limited warranty for a period not to exceed the remaining term of the original limited warranty.
13. Any replacement part repaired after the warranty period will include a 90 day parts coverage
14. Hussong Mfg. may require the defective part to be returned using a pre-authorized RGA number or a photo of the defective component. Failure to provide either can result in a denied claim.
15. This warranty does not cover the appliances ability to heat a desired space, as there are many factors that can impact the heating performance in each home. Consideration should be implied to the appliance's location, room size, home design, environmental conditions, insulation, and tightness of the home.
16. Hussong Mfg. reserves the right to make changes at any time, without notice, in design, material, specifications, and prices. Hussong Mfg. reserves the right to discontinue models and products.

July 2018