KOZY HEAT
FIREPLACES
HUSSONG MANUFACTURING CO., INC.

INSTALLATION AND OPERATION MANUAL

BAYPORT-41-LOG
BAYPORT-41-BW

Models #BAY-41-L & #BAY-41-BW
Direct Vent Gas Fireplace

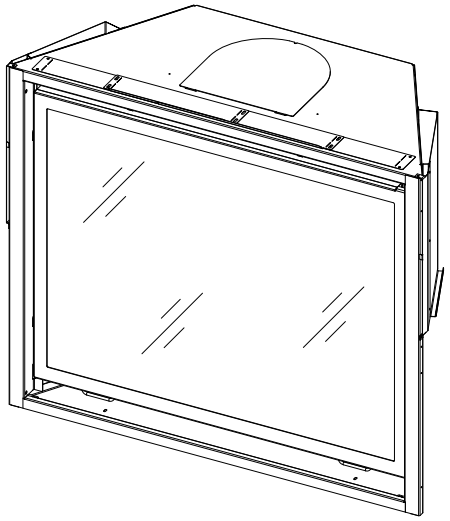

English and French installation manuals are available through your local dealer. Visit our website *www.kozyheat.com*.

Les manuels d'installation en français et en anglais sont disponibles chez votre détaillant local. Visitez *www.kozyheat.com*.

We suggest that our gas hearth products be installed and serviced by professionals who are certified in the U.S. by the National Fireplace Institute® (NFI) as NFI Gas Specialists.

⚠WARNING:
FIRE OR EXPLOSION HAZARD
Failure to follow safety warnings exactly could result in serious injury, death, or property damage.

- **Do not store or use gasoline or other flammable vapors and liquids in the vicinity of this or any other appliance.**
- **WHAT TO DO IF YOU SMELL GAS**
  - **Do not try to light any appliance.**
  - **Do not touch any electrical switch; do not use any phone in your building.**
  - **Leave the building immediately.**
  - **Immediately call your gas supplier from a neighbor's phone. Follow the gas supplier's instructions.**
  - **If you cannot reach your gas supplier, call the fire department.**
- **Installation and service must be performed by a qualified installer, service agency or the gas supplier.**

This appliance may be installed in an aftermarket, permanently located, manufactured home (USA only) or mobile home, where not prohibited by local codes.

This appliance is only for use with the type of gas indicated on the rating plate. This appliance is not convertible for use with other gases, unless a certified kit is used.

⚠ DANGER

HOT GLASS WILL CAUSE BURNS

DO NOT TOUCH GLASS UNTIL COOLED

NEVER ALLOW CHILDREN TO TOUCH GLASS

A barrier designed to reduce the risk of burns from the hot viewing glass is provided with this appliance and shall be installed for the protection of children and other at-risk individuals.

INSTALLER: Leave this manual with the appliance.
CONSUMER: Retain this manual for future reference.

Read this manual before installation or operating this appliance.
Please retain this owner's manual for future reference.

CONGRATULATIONS!

We welcome you as a new owner of a Kozy Heat gas fireplace. Kozy Heat products are designed with superior components and materials, and assembled by trained craftsmen who take pride in their work. To ensure you receive a quality product, the burner and valve assembly are 100 percent test-fired, and the complete fireplace is thoroughly inspected before packaging. Our commitment to quality and customer satisfaction has remained the same for 40 years. We offer a complete line of gas and wood fireplaces, along with stylish accessories to complement any decor. Adding a fireplace is one of the best ways to increase the value of your home, and we are proud to offer a network of dealers throughout the country to help make your experience everything you imagine. We pride ourselves in being dedicated not only to functionality and reliability, but also customer safety. We offer our continual support and guidance to help you achieve the maximum benefit and enjoyment from your Kozy Heat gas fireplace.

Jim Hussong
President

Dudley Hussong
Board Chairman

Homeowner Reference Information

We recommend you record the following information:

Model Name: _____ Date purchased/installed: _____

Serial Number: _____ Location of fireplace: _____

Dealership Purchased from: _____ Dealer phone: _____

Notes: _____

_____

_____

_____

_____

TABLE OF CONTENTS

TABLE OF CONTENTS 5

1.0 INTRODUCTION 7

1.1 Appliance Certification 7

1.2 California Proposition 65 Warning 7

1.3 Requirements for the Commonwealth of Massachusetts 7

2.0 SPECIFICATIONS 8

2.1 Heating Specifications 8

2.2 Appliance Dimensions 9

2.3 Safety Barrier Dimensions 10

3.0 FRAMING 11

3.1 Appliance Placement Considerations 11

3.2 Stand-off Assembly and Installation 11

3.3 Clearances to Combustibles 12

3.4 Wall Enclosure Rough Opening 13

3.5 Vent Termination Framing 14

3.6 Outdoor Covered Fireplace Installation 15

4.0 FACING AND FINISHING 16

4.1 Nailing Flange Assembly and Installation 16

4.2 Mantel and Finishing Requirements 17

4.3 Non-Combustible Zone 19

4.4 Finishing Trim Kit Assembly #B41-FTK 20

4.5 Exterior Trim Kit Assembly 21

4.6 Safety Barrier Installations 22

5.0 GAS LINE CONNECTION 24

5.1 Gas Conversion (sold separately) 24

5.2 Gas Line Installation 24

6.0 TERMINATION LOCATIONS 25

6.1 Vertical Vent Cap Termination 25

6.2 Minimum Termination Clearances 26

7.0 VENTING 27

7.1 Rear Vent Conversion Instructions 27

7.2 Approved 4” x 6⅝” Vent Systems 29

7.3 Venting Requirements 29

7.4 Use of Elbows 29

7.5 Restrictor Assembly and Installation 29

7.6 Top Venting 30

7.7 Rear Venting 31

7.8 #700-2 Series Direct Vent Termination Kit(s) 32

8.0 FIREPLACE SETUP 33

8.1 Glass Frame Assembly 33

8.2 Light Kit 33

8.3 Bottom Frame Removal and Installation 33

8.4 #B41-500 Log Set Installation 34

8.5 #B41-B501 Log Set Installation 35

8.6 Control Board Removal and Installation 36

9.0 ELECTRICAL INFORMATION 37

9.1 Electrical Specifications 37

9.2 Wiring Requirements 37

10.0 OPERATING INSTRUCTIONS 38

10.1 Setup Proflame 2 IFC Module 39

10.2 Initialize the Control System 39

10.3 Reset the System for Manual Operation 39

10.4 Automatic Safety Restart 39

10.5 Backup Battery Operation 39

10.6 IFC Module Ignition Sequence 40

10.7 Additional Diagnostic Information 40

10.8 Remote Control Operation 41

11.0 ADJUSTMENT 44

11.1 Pressure Testing 44

11.2 Flame Appearance Adjustments 45

12.0 TROUBLESHOOTING 47

13.0 MAINTENANCE 49

13.1 Firebox 49

13.2 Fan 49

13.3 Vent System 49

13.4 Glass Assembly 49

13.5 Burner and Pilot System 50

14.0 REPLACEMENT PARTS LIST 51

LIMITED LIFETIME WARRANTY 53

1.0 INTRODUCTION

1.1 Appliance Certification

Laboratory: OMNI-Test Laboratories in Portland, Oregon

Standards:

ANSI Z21.88-2016/CSA 2.33-2016, Vented Gas Fireplace Heaters

CSA 2.17 2017, Gas-Fired Appliances for Use at High Altitudes

This installation must conform with local codes, or in the absence of local codes, with the National Fuel Gas Code, ANSI Z223.1/NFPA 54, or the Natural Gas and Propane Installation Code, CSA B149.1.

1.2 California Proposition 65 Warning

WARNING: This product can expose you to chemicals including Carbon Monoxide, that is an externally vented by-product of fuel combustion, which is [are] known to the State of California to cause cancer, birth defects, or other reproductive harm. For more information, visit www.P65Warnings.ca.gov.

1.3 Requirements for the Commonwealth of Massachusetts

The following requirements reference various Massachusetts and national codes not contained in this manual.

For all sidewall horizontally vented gas fueled equipment installed in every dwelling, building or structure used in whole or in part for residential purposes, including those owned or operated by the Commonwealth and where the side wall exhaust vent termination is less than (7) feet above finished grade in the area of the venting, including but not limited to decks and porches, the following requirements shall be satisfied:

1.3.1 Installation of Carbon Monoxide Detectors

At time of installation of side wall horizontally vented gas fueled equipment, the installing plumber or gas-fitter shall observe that a hard wired carbon monoxide detector with an alarm and battery back-up is installed on the floor level where the gas equipment is to be installed. In addition, the installing plumber or gas-fitter shall observe that a battery operated or hard wired carbon monoxide detector is installed on each additional level of the dwelling, building or structure served by the side wall horizontal vented gas fueled equipment. It shall be the responsibility of the property owner to secure the services of qualified licensed professionals for the installation of hard wired carbon monoxide detectors.

In the event that the side wall horizontally vented gas fueled equipment is installed in a crawl space or attic, the hard wired carbon monoxide detector with alarm and battery back-up may be installed on the next adjacent floor level. In the event that the requirements of this subdivision can not be met at the time of completion of installation, the owner shall have a period of thirty (30) days to comply with the above requirements; provided, however, that during said thirty (30) day period, a battery operated carbon monoxide detector with an alarm shall be installed.

1.3.2 Approved Carbon Monoxide Detectors

Each carbon monoxide detector as required in accordance with the above provisions shall comply with NFPA 720 and be ANSI/UL 2034 listed and IAS certified.

1.3.3 Signage

A metal or plastic identification plate shall be permanently mounted to the exterior of the building at a minimum of eight (8) feet above grade directly in line with the exhaust vent terminal for the horizontally vented gas fueled heating appliance or equipment. The sign shall read, in print no less the one-half inch (½) in size, "GAS VENT DIRECTLY BELOW. KEEP CLEAR OF ALL OBSTRUCTIONS".

1.3.4 Inspection

The state or local gas inspector of the side wall horizontally vented gas fueled equipment shall not approve the installation unless, upon inspection, the inspector observes carbon monoxide detectors and signage installed in accordance with the provisions of 248 CMR 5.08 (2) (a) 1 through 4.

1.3.5 Exemptions

The following equipment is exempt from 248 CMR 5.08 (2) (a) 1 through 4: The equipment listed in Chapter 10 entitled "Equipment Not Required To Be Vented" in the most current edition of NFPA 54 as adopted by the Board; and Product Approved side wall horizontally vented gas fueled equipment installed in a room or structure separate from the dwelling, building or structure used in whole or in part for residential purposes.

1.3.6 Manufacturer Requirements

1.3.6.1 Gas Equipment Venting System Provided

When the manufacturer of Product Approved side wall horizontally vented gas equipment provides a venting system design or venting system components with the equipment, the instructions provided by the manufacturer for installation of the equipment and the venting system shall include:

- Detailed instructions for the installation of the venting system design or the venting system components; and
- A complete parts list for the venting system design or venting system.

1.3.7 Gas Equipment Venting System NOT Provided

When the manufacturer of Product Approved side wall horizontally vented gas equipment does not provide the parts for venting the flue gases, but identifies "special venting systems", the following requirements shall be satisfied by the manufacturer:

- The referenced "special venting systems" instructions shall be included with the appliance or equipment installation instructions and;
- The "special venting systems" shall be Product Approved by the Board, and the instructions for that system shall include a parts list and detailed installation instructions.

A copy of all installation instructions for all Product Approved side wall horizontally vented gas fueled equipment, all venting instructions, all parts lists for venting instructions, and/or all venting design instructions shall remain with the appliance or equipment at the completion of the installation.

2.0 SPECIFICATIONS

2.1 Heating Specifications

	Natural Gas	Propane
Maximum Input Rating	30,000 Btu/h (8.8 KW)	30,000 Btu/h (8.8 KW)
Minimum Input Rating	15,500 Btu/h (4.5 kW)	15,500 Btu/h (4.5 kW)
Manifold Pressure (High)	3.8" WC (0.95 kPa)	11" WC (2.74 kPa)
Manifold Pressure (Low)	1.1" WC (0.27 kPa)	2.9" WC (.72 kPa)
Orifice Size (DMS)	#41	#.0625

2.1.1 Altitude Adjustment

This appliance may be installed at higher altitudes. Please refer to National Fuel Gas Code ANSI Z223.1/NFPA 54, CSA-B149.1 Natural Gas and Propane Installation Code, local authorities, or codes having jurisdiction in you area regarding derate guidelines.

2.1.1.1 US Installations

Refer to the American Gas Association guidelines for the gas designed appliances derating method. For elevations above 2,000 ft (610 m), input ratings are to be reduced by 4% for each 1,000 ft (305 m) above sea level.

2.1.1.2 Canadian Installations

When the appliance is installed at elevations above 4,500 ft (1,372 m), the certified high altitude rating shall be reduced at the rate of 4% for each additional 1,000 ft (305 m).

2.2 Appliance Dimensions

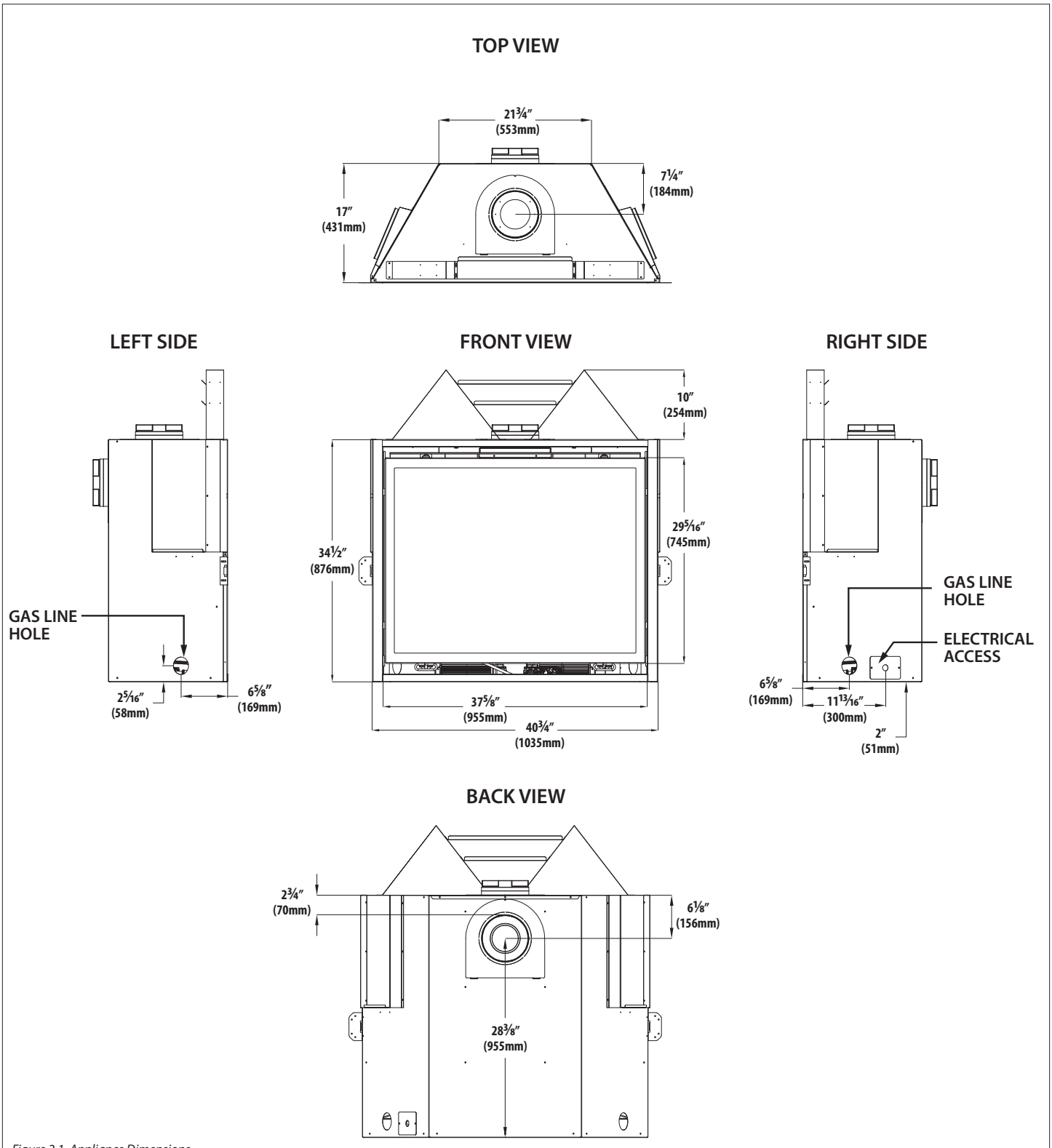

Figure 2.1, Appliance Dimensions

2.3 Safety Barrier Dimensions

WARNING: A barrier designed to reduce the risk of burns from the hot viewing glass is provided with this appliance and shall be installed for the protection of children and other at-risk individuals.

If the barrier becomes damaged, the barrier shall be replaced with Hussong Mfg.'s barriers for this appliance. Only doors certified with the appliance shall be used.

NOTE: Safety screen B41-PTF2 requires the fireplace to be 2-1/4" (57 mm) above the hearth and 3" (76 mm) clearance from the outside edge to a sidewall.

Please refer to Section 4.6 Safety Barrier Installations on page 22 for mounting and installation options.

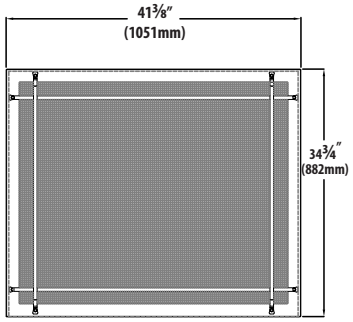

B41-PSF2

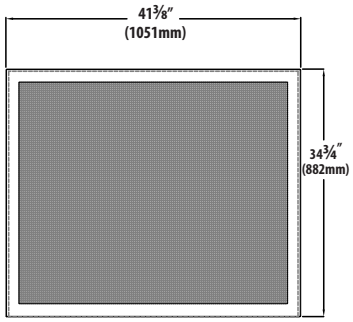

B41-FRSF2

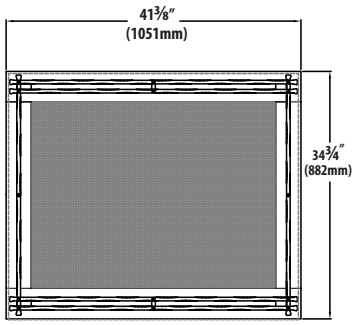

B41R-MSF2

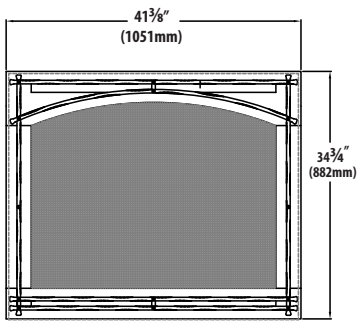

B41A-MSF2

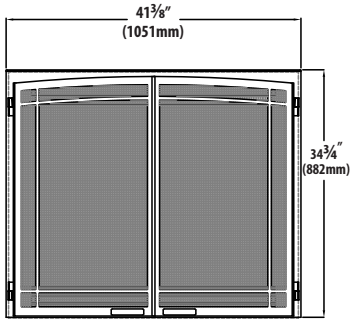

B41A-FPDSF2

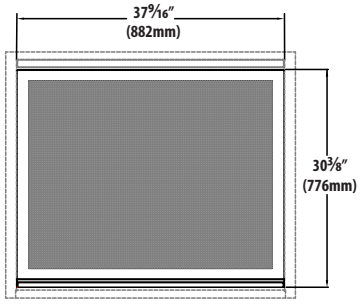

B41-RSF2

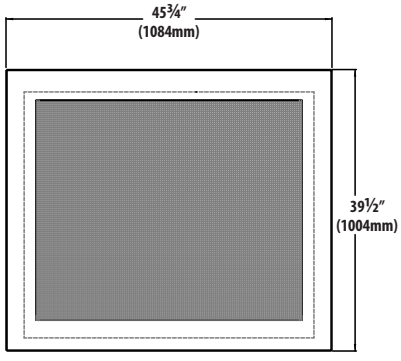

B41-PTF2

SAFETY SCREEN B41-PTF2 REQUIRES THE FIREPLACE TO BE 2-1/4" (57mm) ABOVE THE HEARTH AND 3" (76mm) CLEARANCE FROM THE OUTSIDE EDGE TO A SIDEWALL

3.0 FRAMING

3.1 Appliance Placement Considerations

WARNING: Due to high temperatures, the appliance should be located out of traffic and away from furniture and draperies.

FIRE HAZARD: Do NOT install this appliance directly on carpeting, vinyl, or any other combustible material other than wood.

- This appliance must be installed on a level surface capable of supporting the fireplace and venting. If possible, place the fireplace in a position where the vent terminates between two studs, eliminating the need for any additional framing.
- This fireplace may be installed in a bedroom.
- Please be aware of the large amount of heat this fireplace will produce when determining a location.

3.2 Stand-off Assembly and Installation

WARNING: The top stand-offs provide the 10 in (254 mm) minimum clearance to the header. Use only non-combustible material in this area for the entire width of the fireplace. DO NOT use wood, sheetrock, et cetera, in this zone.

Top stand-off brackets must be formed and attached prior to positioning fireplace into framed opening.

NOTE: If installing trim kit assembly #B41-FTK, please refer to Section 4.4 Finishing Trim Kit Assembly #B41-FTK on page 20 before installing stand-offs.

1. Remove and save (4) screws securing stand-off heat shields and stand-off brackets on top of the fireplace.
2. Form each top stand-off bracket by bending at perforations, as shown.
3. Align the holes in the formed top stand-offs with the holes in the fireplace top. Secure with the (4) screws previously removed along with (4) screws located on top of the fireplace.
4. Form stand-off heat shields as shown. The flange will face up and to the back of the fireplace.
5. Align the in the stand-off heat shields with the holes in the top stand-off brackets Secure with (8) screws provided in the fireplace components packet.

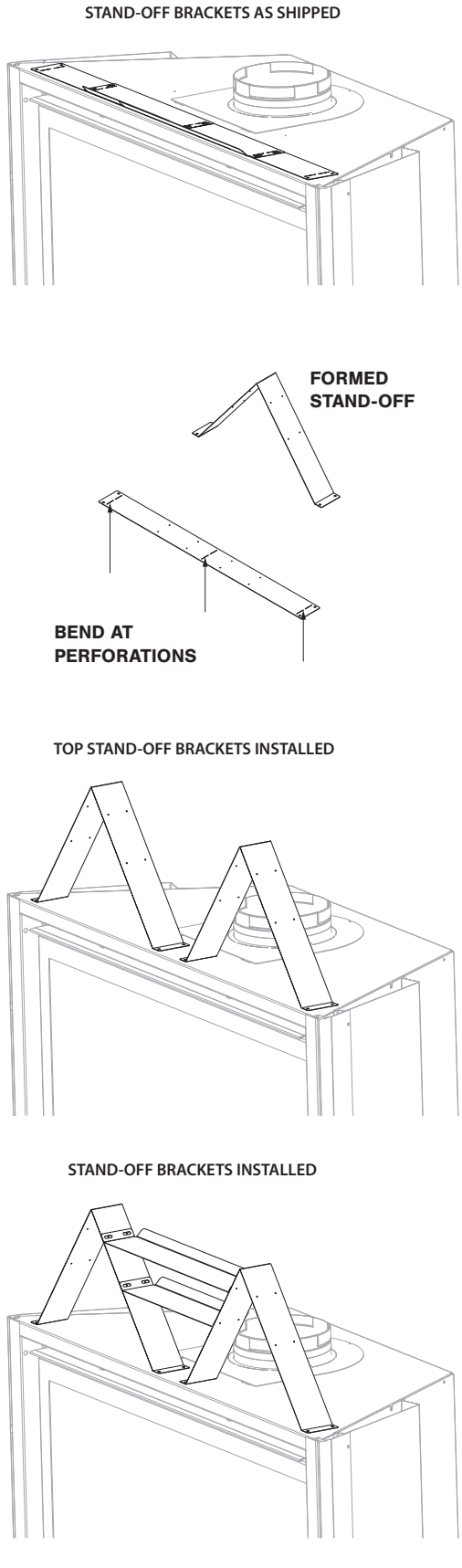

Figure 3.1, Stand-Off Assembly and Installation

3.3 Clearances to Combustibles

Table 3.1, Minimum Appliance Clearances to Combustible Material		
From appliance top stand-offs	0 in	0 mm
From appliance left and right side stand-offs	0 in	0 mm
From appliance back stand-offs	0 in	0 mm
From appliance corners	1/4 in	6 mm
From appliance front	36 in	914 mm
From appliance top to ceiling	31 in	787 mm
Appliance sides to adjacent sidewall	1 in	25 mm
Top of appliance to 3/4 in (19 mm) trim	5-1/2 in	139 mm
Mantel 6 in (152 mm) deep from appliance top	9 in	356 mm

TYPICAL HORIZONTAL INSTALLATION TOP VENT

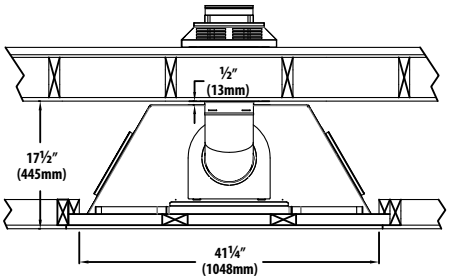

TYPICAL HORIZONTAL INSTALLATION REAR VENT

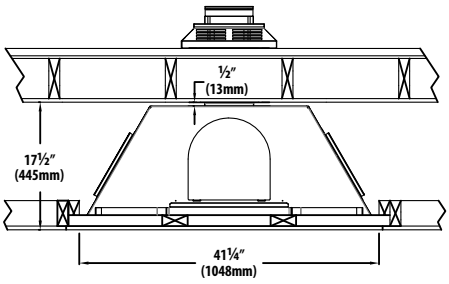

TYPICAL CORNER INSTALLATION TOP VENT

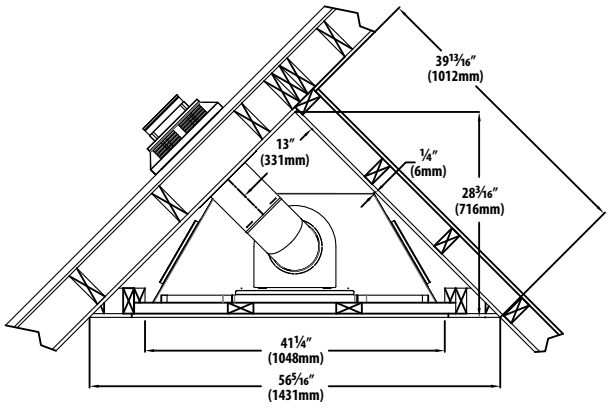

TYPICAL VERTICAL INSTALLATION TOP VENT

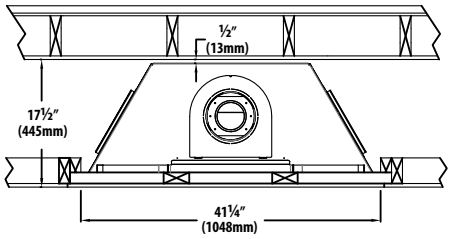

TYPICAL VERTICAL INSTALLATION REAR VENT

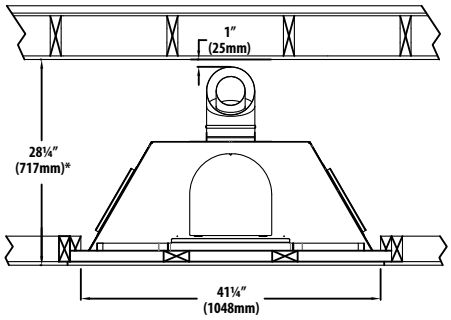

***DIMENSION SHOWN WITH LISTED DURAVENT ELBOW.**

NOTE: Approved vent system elbows for this appliance vary in vertical length. Consult vent manufacturer's instructions to determine the elbow dimension used for your installation. Adjust as necessary to maintain the required 1" (25mm) clearance from the vent pipe to combustible material.

Figure 3.2, Typical Installation Options

3.4 Wall Enclosure Rough Opening

WARNING: Provide adequate clearances around air openings into the combustion chamber. Provide adequate clearance in front of the fireplace for barrier removal, component access, gas line installation, service access, etc.

- Framing dimensions should allow for wall covering thickness and fireplace facing materials. If using a hearth, adjust the rough opening size as necessary to maintain minimum clearance requirements.
- If masonry is to be used (optional), prepare the necessary foundation for the masonry load. When masonry construction is to be used, a lintel must be used over the top of the appliance to support the additional weight.

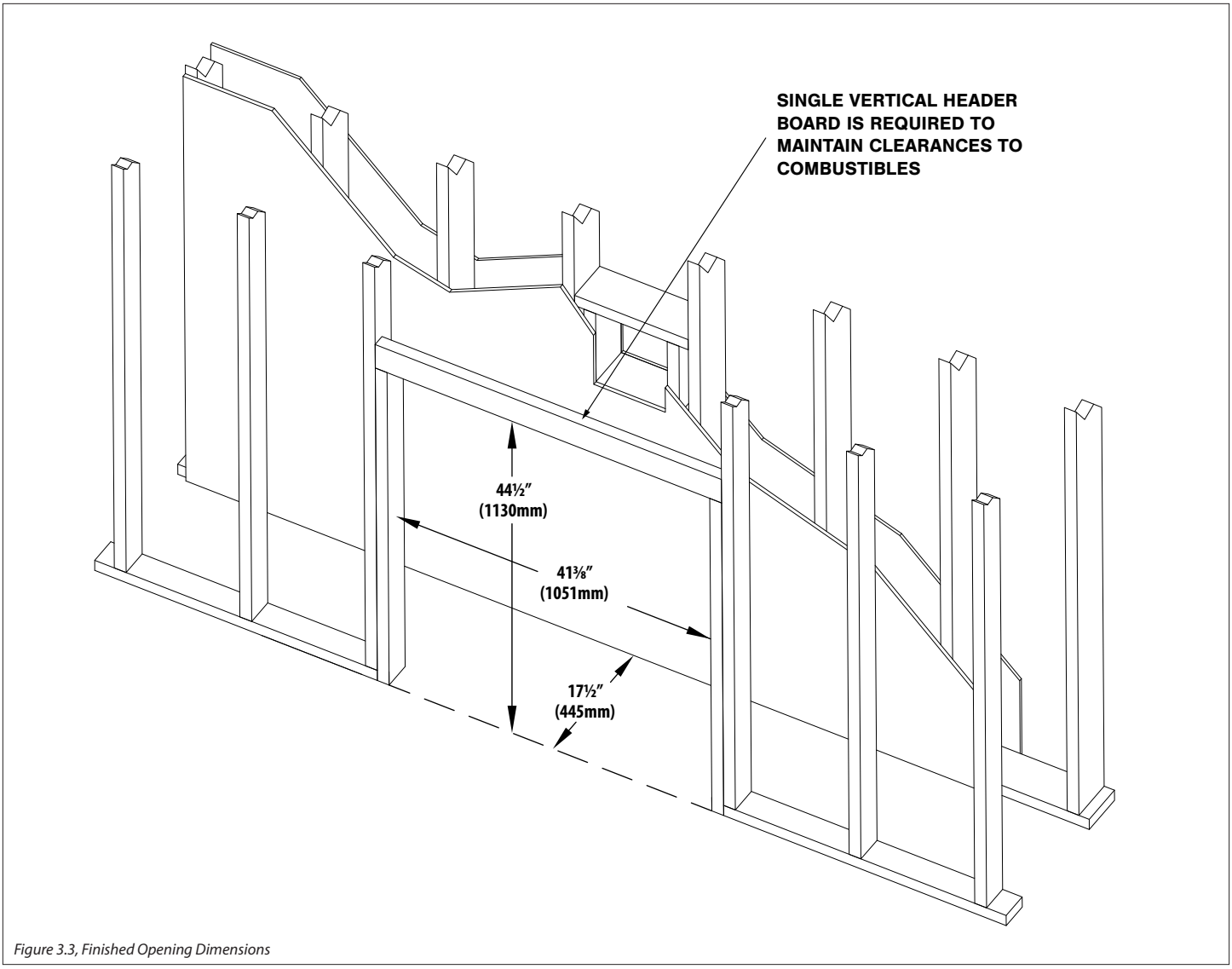

Figure 3.3, Finished Opening Dimensions

3.5 Vent Termination Framing

IMPORTANT: Vent cap location must be in compliance with Section 6.2 Minimum Termination Clearances on page 26.

WARNING: DO NOT RECESS THE VENT CAP INTO WALL OR SIDING.

3.5.1 Vertical Terminations

CAUTION: Cold air transfer area. The surround fireplace chase must comply with all clearances as outlined in this manual, and be constructed in compliance with local building codes. Outside walls should be insulated to prevent cold air from entering room.

- Follow vent pipe manufacturer's installation instructions for vertical terminations.
- A minimum of 1 in (25 mm) clearance on all sides of the vertical vent pipe must be maintained.
- Attic insulation shields may be insulated using unfaced insulation products listed as non-combustible per ASTM E 136.

3.5.2 Horizontal Terminations

IMPORTANT: Horizontal vent sections require 1/4 in (6 mm) rise for every 12 in (305 mm) of travel.

NOTE: Elbows listed with approved vent systems for this appliance vary in vertical length. Please consult the vent manufacturer's instructions to determine the elbow dimension used for installation. Adjust the wall pass-through rough opening dimensions as necessary to maintain clearance requirements.

NOTE: Wall thimble products that comply with the required clearance to combustibles must be installed for all horizontal vent runs that pass through interior or exterior walls. These wall thimble products may be insulated using unfaced insulation products listed as noncombustible per ASTM E 136.

1. Measure from floor level of the fireplace to the center of where the vent pipe will penetrate the wall.
   Elbows listed with approved vent systems for this appliance vary in vertical length. Please consult the vent manufacturer's instructions to determine the elbow dimension used for installation. Adjust the wall pass-through rough opening dimensions as necessary to maintain clearance requirements.
2. Cut and frame an opening in the wall to allow the vent system to run level through the wall pass-through.
3. Follow the vent pipe manufacturer's installation instructions for vent installation.

MINIMUM HORIZONTAL RIGID PIPE VENTING
TOP VENT NATURAL GAS AND PROPANE

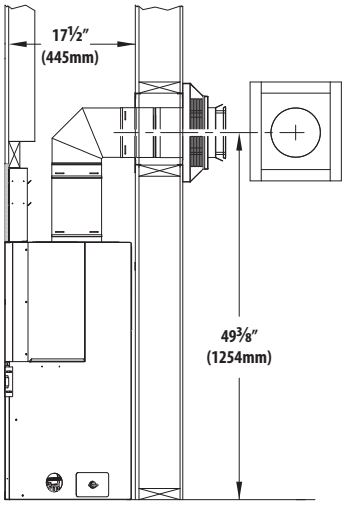

MINIMUM HORIZONTAL RIGID PIPE VENTING
REAR VENT NATURAL GAS AND PROPANE

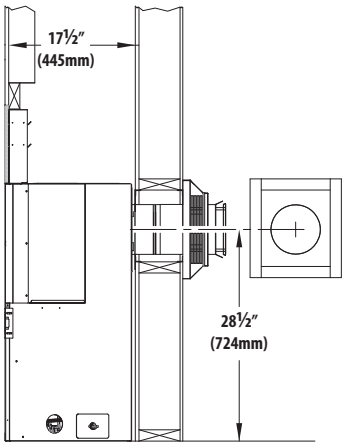

MINIMUM HORIZONTAL FLEX PIPE VENTING
TOP VENT NATURAL GAS AND PROPANE

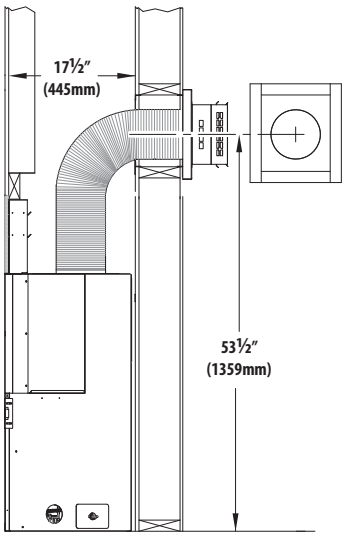

Figure 3.4, Horizontal Vent Terminations

3.6 Outdoor Covered Fireplace Installation

A outdoor covered fireplace installation allows a fireplace to be installed in an outdoor covered area, where the appliance is protected from direct precipitation.

Follow the instructions and illustration below for installation procedures.

3.6.1 Safety Screen Barriers

Hussong Mfg. highly recommends to use black painted safety barriers in outdoor installations. Other screen barriers that incorporate a plated or patina finish are highly susceptible to oxidation and discoloration.

3.6.2 Requirements

- Fireplace operation is approved from 40°F to 110°F.
- All wiring connections shall be in accordance with outdoor requirements of NECA NFPA 70.
- All clearances and requirements in your appliance manual must be adhered to.

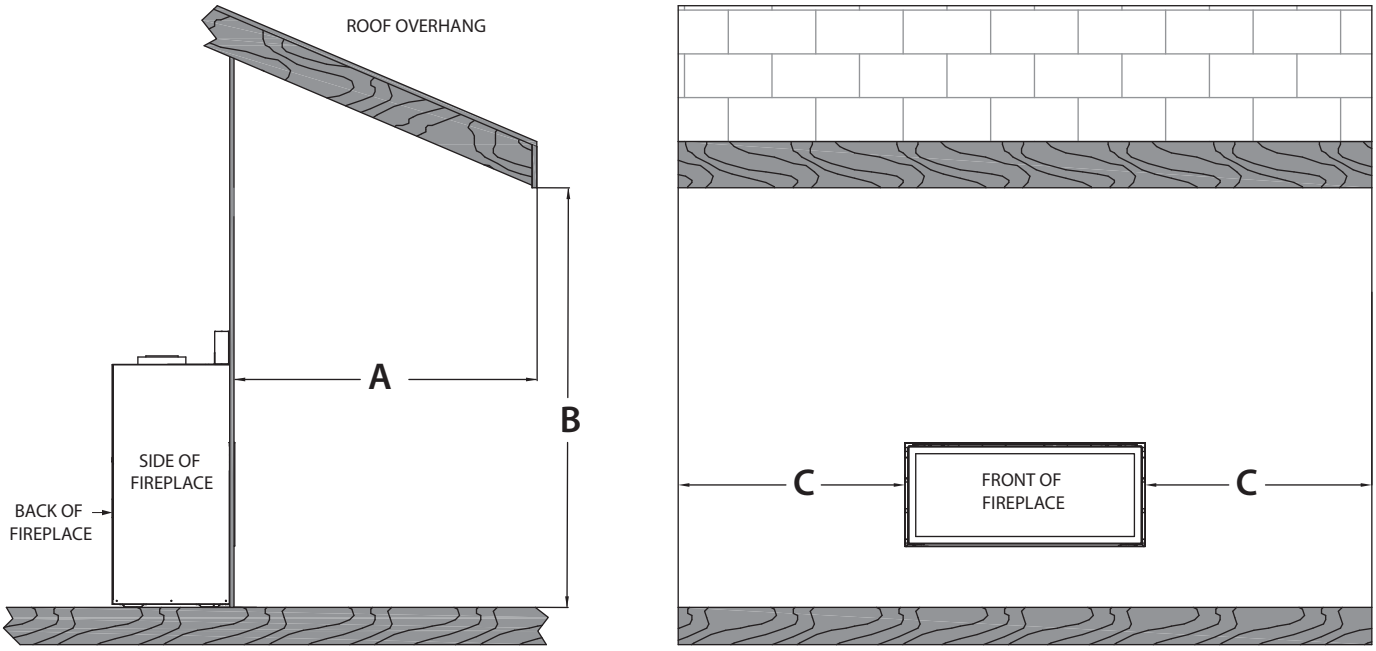

The overhang (A) must be a minimum of 1/2 or greater of the roofline elevation (B) above the base of the fireplace.

The width of the overhang to each side of the appliance (C) must be a minimum of 1/2 or greater of the roofline elevation (B) above the base of the fireplace.

EXAMPLE: If roofline (B) is 10 ft above the base of fireplace, the overhang (A) must be 5 ft or greater. The width of the overhang to EACH side of the fireplace (C) must be 5 ft or greater.

Figure 3.5, Outdoor Covered Fireplace Install

4.0 FACING AND FINISHING

4.1 Nailing Flange Assembly and Installation

NOTE: Depending on facing material, tabs can be adjusted forward or backward up to ½ in (13 mm).

CAUTION: Never permanently remove these assemblies from the fireplace—they must be secured regardless of finish material used.

1. Remove (2) nailing flanges from the right and left side of the fireplace.
2. Align nailing flange with holes on outside corners of fireplace, with the stand-off flanges on the nailing flanges facing away from the fireplace
3. Secure the nailing flanges to the fireplace with screws (provided) through the slots in nailing flanges.
4. Bend perforation on nailing flange until parallel with fireplace face. Do not bend toward fireplace face.
5. Position framing stud against the small stand-off (located on backside of nailing flange). Secure with nails or screws.

- When installed, the nailing flanges provide the minimum ¼ in (6 mm) clearance from the sides of the fireplace to framing.

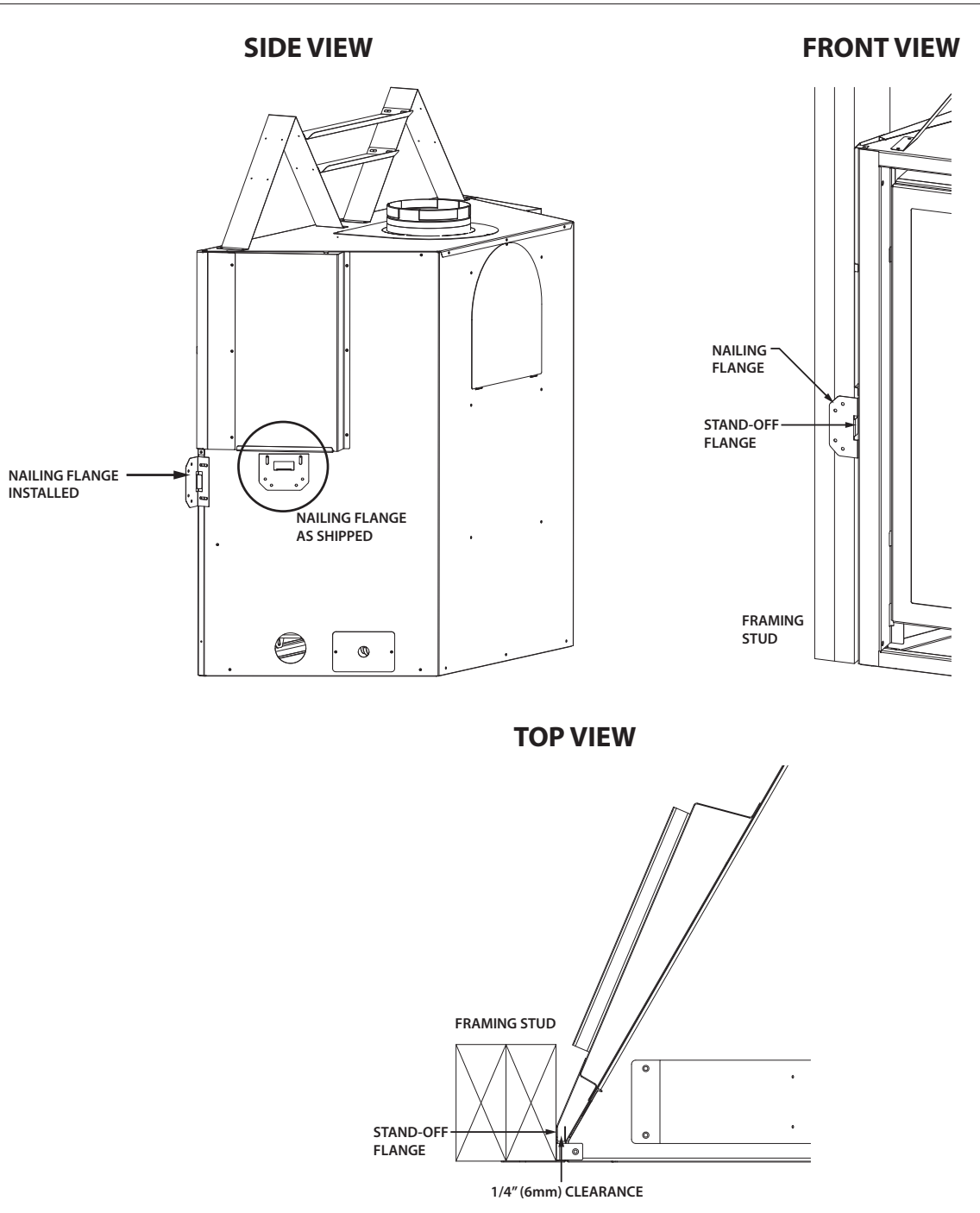

Figure 4.1, Nailing Flange Assembly and Installation

4.2 Mantel and Finishing Requirements

4.2.1 Mantel Projections

WARNING: All minimum clearances to combustible material MUST be maintained.

Combustible Mantel Projections: As referenced in Figure 4.2, the 3/4" (19mm) trim can start at 5-1/2" (139mm) above the top of the appliance with a 6" (152mm) mantel starting at 9" above the top of the appliance. Mantel projections can increase 1" (25mm) of depth for every 1" (25mm) of height starting at the 6" (152mm) mantel.

Non-combustible Mantel Projections: A minimum vertical clearance of 6 in (152 mm) above the appliance to a maximum 6 in (152 mm) depth of a non-combustible mantel. Follow projection 1 in (25 mm) up for every 1 in (25 mm) deeper.

4.2.2 Finishing Recommendations

NOTE: The surface area above the appliance may be affected by high temperatures emitted from this appliance. To help avoid or reduce the possibility of the sheetrock to crack, Hussong Mfg. recommends the following methods:

- Ensure the non-combustible material and sheetrock is dry and dust free.
- For taping and mudding seams, we recommend heat resilient tape, mesh and joint compounds, such as Durabond. Mud must be cured as per manufacturer's recommendations.
- For a painted surface, use a high quality acrylic latex primer and finish coat. Avoid flat or light-colored paints to prevent discoloring.

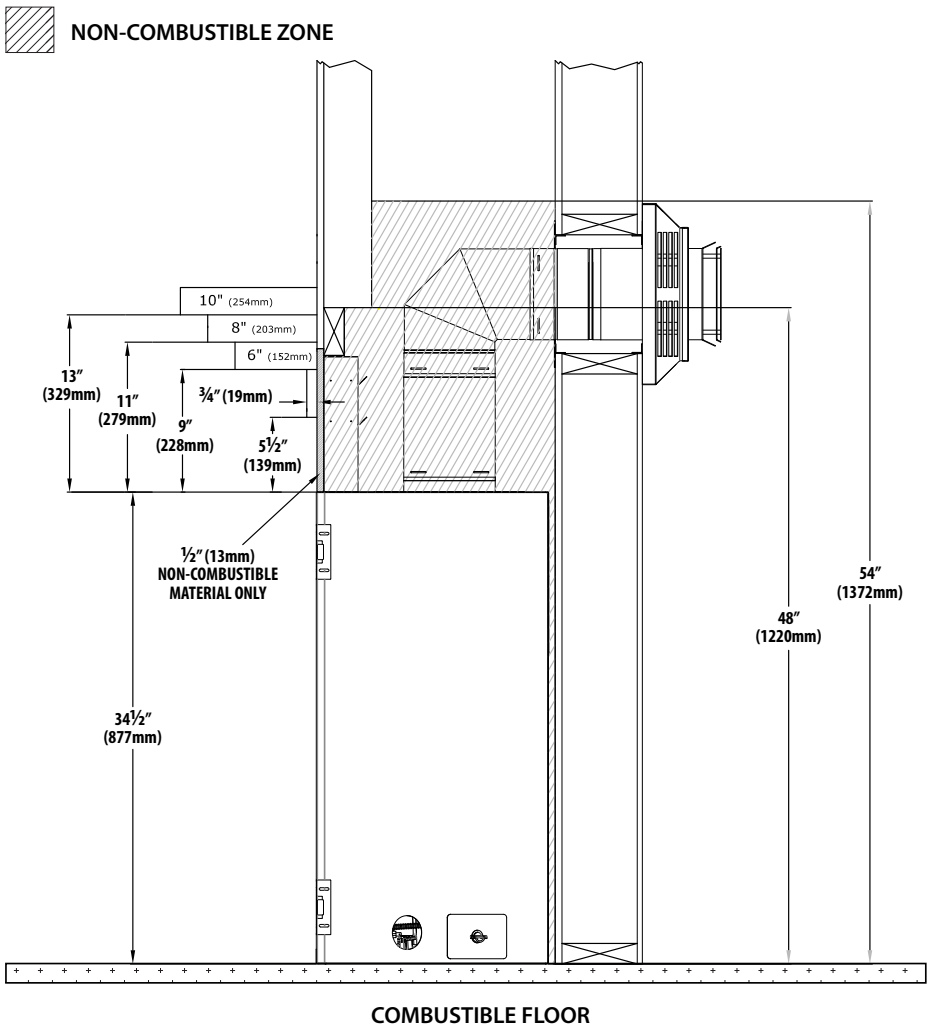

Figure 4.2, Mantel and Trim Requirements

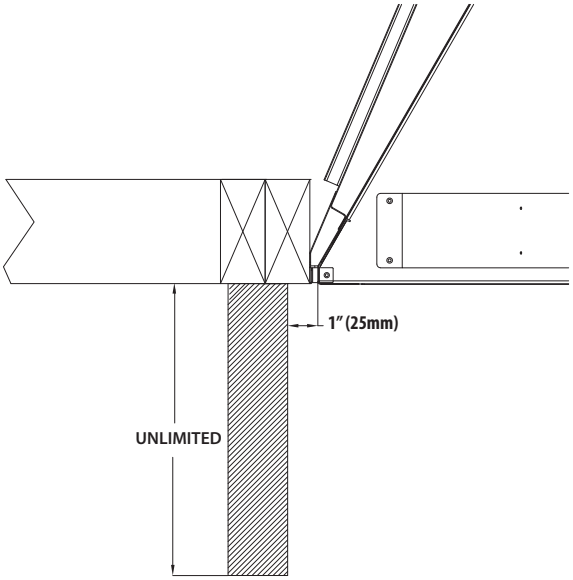

Figure 4.3, Sidewall Clearance for All Safety Barriers

WARNING: THESE MANTEL CLEARANCES ARE FOR USE WITH SAFETY BARRIER B41-RSF2 ONLY

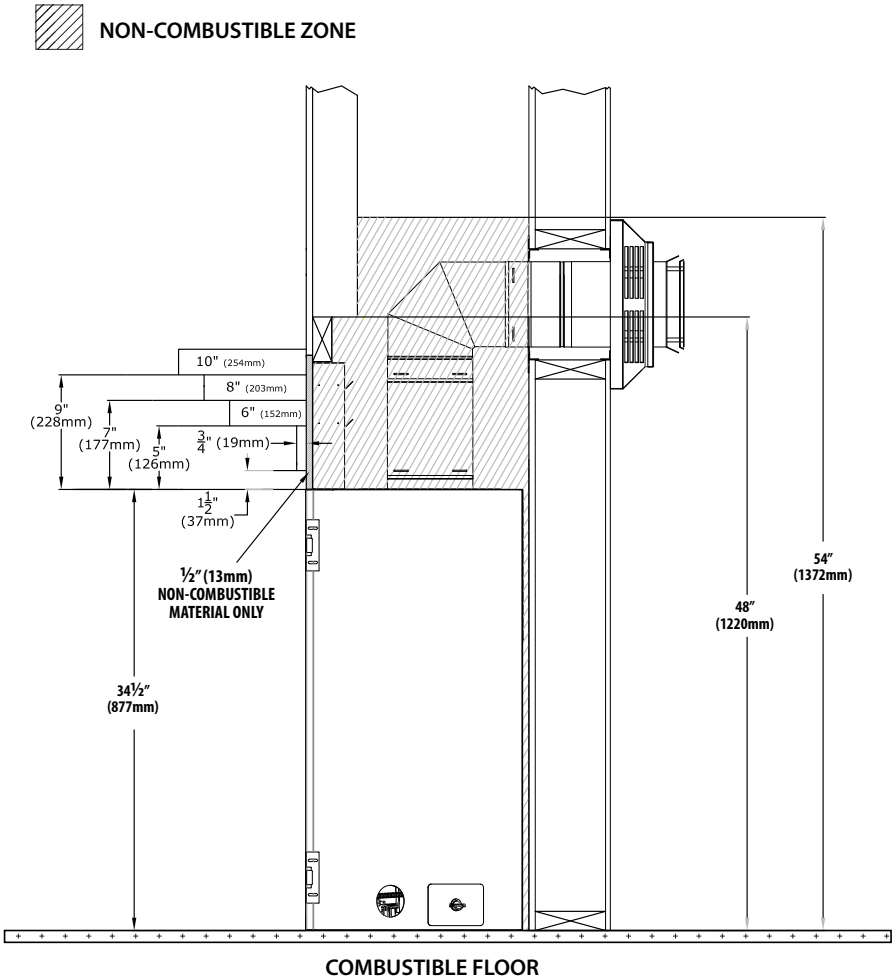

Figure 4.4, B41-RSF2 Mantel Requirements

4.3 Non-Combustible Zone

A 42-7/8" x 10-1/2" non combustible material is supplied with this fireplace and allows 3/4" overlap onto framing side and 1/2" overlap onto header.

4.3.1 Finishing Recommendations

NOTE: The surface area above the appliance may be affected by high temperatures emitted from this appliance. To help avoid or reduce the possibility of the sheetrock to crack, Hussong Mfg. recommends the following methods:

- Ensure the non-combustible material and sheetrock is dry and dust free.
- For taping and mudding seams, we recommend heat resilient tape, mesh and joint compounds, such as Durabond. Mud must be cured as per manufacturer's recommendations.
- For a painted surface, use a high quality acrylic latex primer and finish coat. Avoid flat or light-colored paints to prevent discoloring.

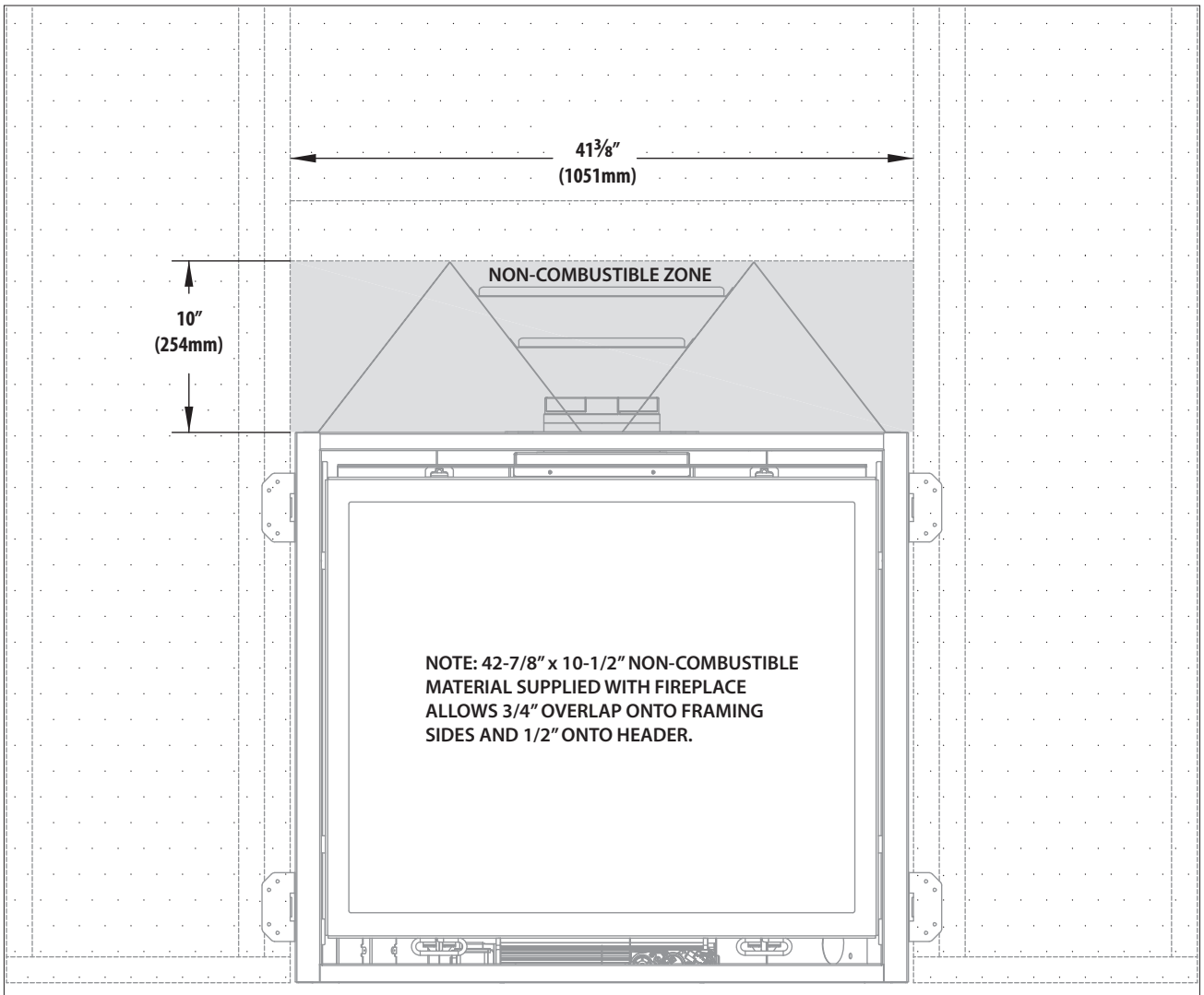

Figure 4.5, BAY-41 Non-Combustible Zone

4.4 Finishing Trim Kit Assembly #B41-FTK

IMPORTANT: This trim kit assembly must be attached before fireplace installation.

NOTE: The top trim panel must be installed with the top stand off brackets.

1. Remove and save (5) screws securing the front sections of the side heat shields on each side.
2. Remove nailing flanges from the sides of the unit.
3. Remove and save the top and bottom screw on each side of the outer shell of the unit.
4. Install the side trim panels. Align the holes in the side panels with the holes in the side of the unit as shown below. Secure with screws previously removed from the heat shields and nailing flanges.
5. If installed, remove the top stand-offs.
6. Install the top trim panel. Align the holes in the top trim panel with the front holes in the stand-offs and attach to fireplace top. Secure with previously removed screws .
7. If installed, remove and discard the existing bottom front frame portion.
8. Install the bottom trim panel into the slots in the bottom corners of the unit, as shown below.

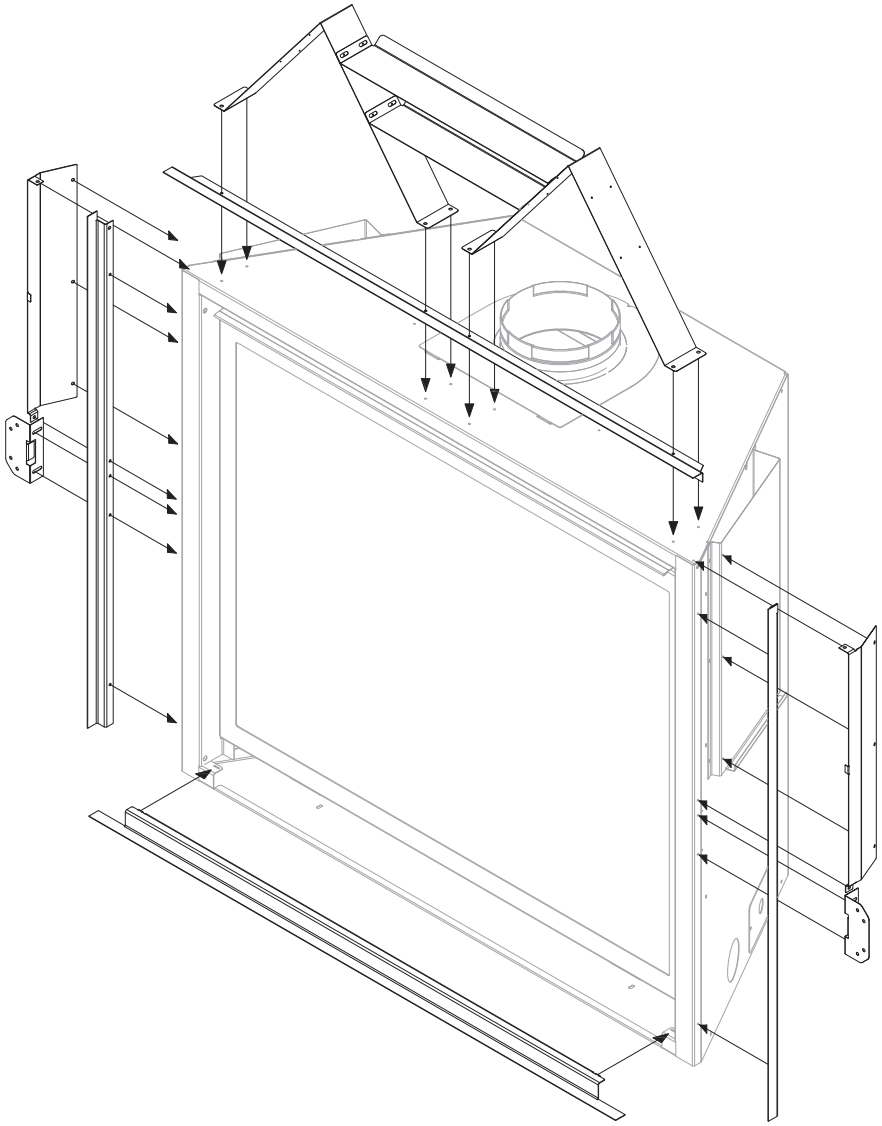

Figure 4.6, Finishing Trim Kit Installation #B41-FTK

4.5 Exterior Trim Kit Assembly

IMPORTANT: This exterior trim kit is supplied with and for use only with safety barrier #B41-RSF2.

IMPORTANT: Exterior trim kit assembly must be attached before fireplace installation.

NOTE: The top trim panel must be installed with the top stand off brackets.

1. Remove and save (5) screws securing the front sections of the side heat shields on each side.
2. Remove nailing flanges from the sides of the unit.
3. Remove and save the top and bottom screw on each side of the outer shell of the unit.
4. Install the exterior trim side panels. Align the holes in the side panels with the holes in the side of the unit as shown below. Secure with screws previously removed from the heat shields and nailing flanges.
5. If installed, remove the top stand-offs.
6. Install the exterior trim top panel. Align the holes in the top trim panel with the front holes in the stand-offs and attach to fireplace top. Secure with previously removed screws .
7. If installed, remove and discard the existing bottom front frame portion.
8. Install the exterior trim bottom panel into the slots in the bottom corners of the unit, as shown below.

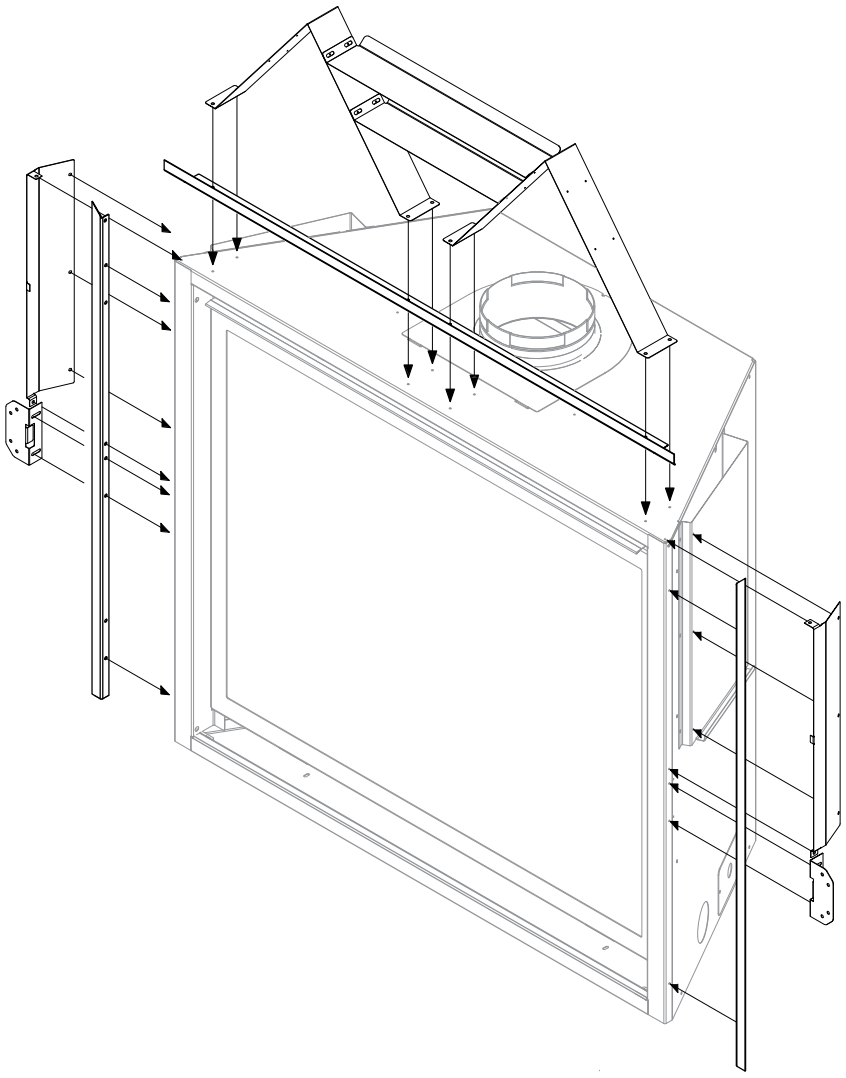

Figure 4.7, Exterior Trim Kit Installation #B41-081

4.6 Safety Barrier Installations

4.6.1 Inside Fit - Recessed Installation

Model #B41-RSF2

1. Center the screen front over the glass frame assembly, allowing the screen front's notched tabs to fit inside the air openings.
2. Align the notched tabs (located on the back) with the slots in the air openings. Raise the screen front slightly and push back into position.
3. Lower the screen front until the notched tabs are firmly in position.
4. Insert the upper hood into the clips located at the top of the upper air passage. Note: this will be a fairly tight fit.

• To remove safety screen: lift the screen up and out of slots.

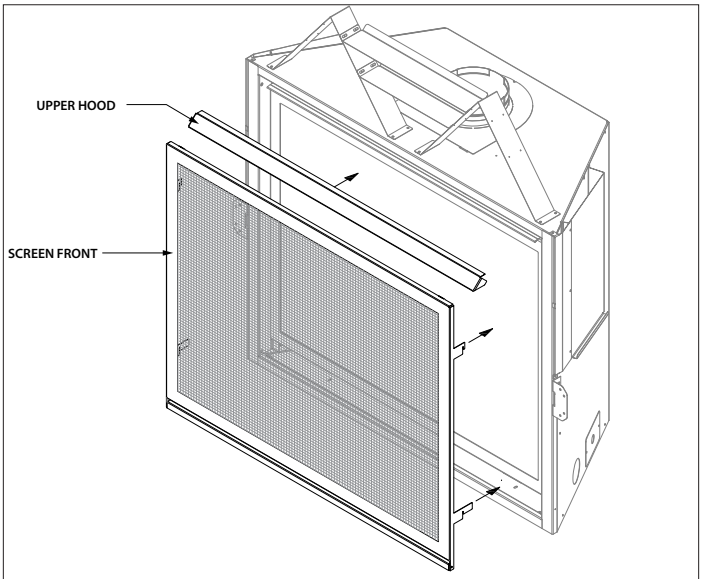

Figure 4.8, #B41-RSF2 Installation

4.6.2 Overlap Fit - Hanging Installation

IMPORTANT: If there is gasket rope present on the back on the safety screen, ensure the gasket makes contact with the appliance or finishing material. The gasket MUST maintain contact to achieve the mantel clearances listed in this manual.

1. Center the screen front over the glass frame assembly, allowing the screen front's mounting brackets to fit inside the air openings.
2. Align the notched tabs (located on the back) with the slots in the fireplace. Raise slightly and push back to desired position.
3. Lower the screen front until the notched tabs are firmly in position, verifying the depth accommodates finish material.

• To remove safety screen: lift the screen up and out of slots.

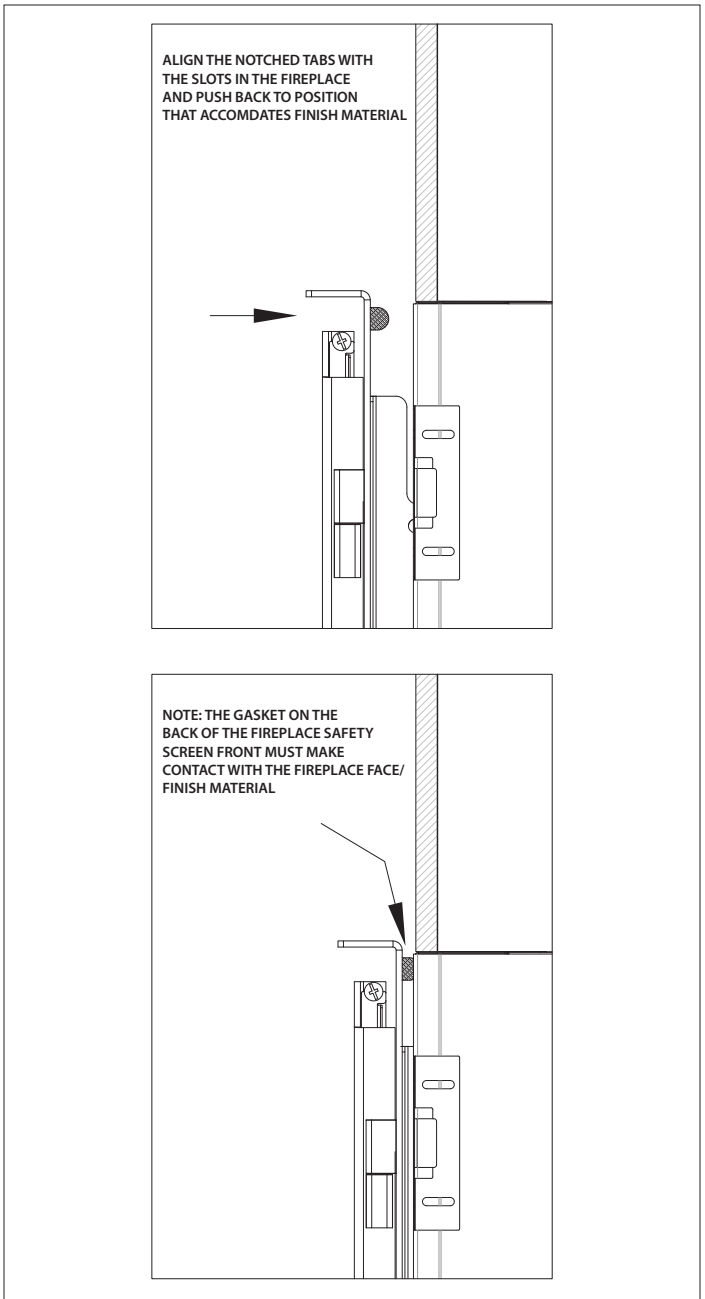

Figure 4.9, Side View Gasket Install

4.6.3 Overlap Fit - Hanging Installation with Adjustable Louvers (Closed Brackets)

Models #B41-PSF2 and #B41-FRSF2

The listed safety barriers are equipped with the louver built into the safety screen face. The hanging brackets located on the back of screen front are equipped with notches to allow the louver to be adjusted to accommodate facing material thickness. The safety barrier is shipped with the louver in the first notch position.

To adjust louver position:

1. Locate the (3) screws on each hanging bracket at the back of the screen front.
2. Loosen (6) screws on both hanging brackets. This will allow you to bend the bracket outward to adjust the louver to the desired position.
   NOTE: The position of the louver should match with the desired position of the notched tabs needed for your installation. The louver in the first notch position will match with the first notch position in the notched tabs, the louver in the second notch position will match the second notch in the notched tabs, etc.
3. Adjust the louver to the desired notch in order to accommodate facing material and to cover the control compartment as you see fit. Re-tighten screws on hanging brackets.
4. Install safety barrier. Center the screen front over the glass frame assembly, allowing the hanging brackets to fit inside the air openings.
5. Align the notched tabs with the slots in the fireplace. Raise slightly and push back to desired position.
6. Lower the screen front until the notched tabs are firmly in position. Verify the depth accommodates finish material, and the notched tabs position matches the louver notch position.
7. To remove safety screen: lift the screen up and out of slots.

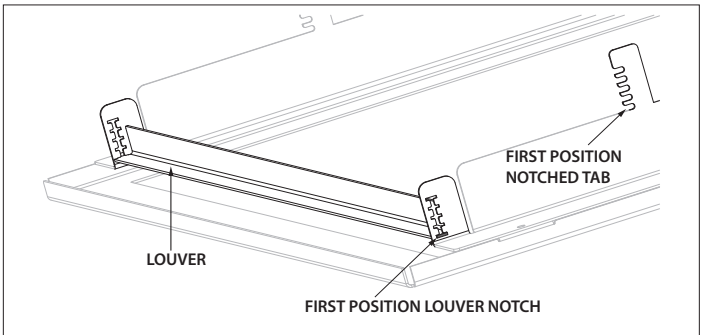

Figure 4.10, Safety Screen Louver and Notch Locations

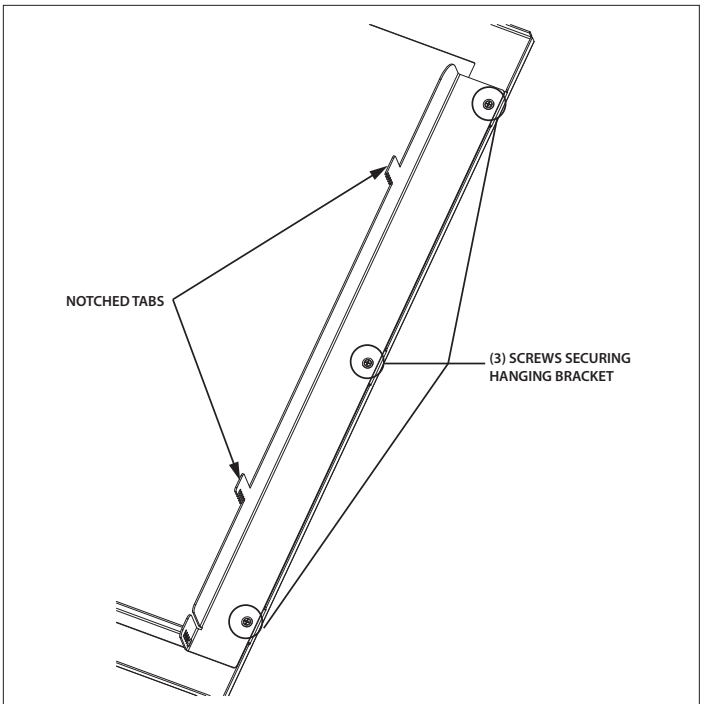

Figure 4.11, Screw Location on Hanging Bracket

Figure 4.12, Adjust Louver

5.0 GAS LINE CONNECTION

5.1 Gas Conversion (sold separately)

ATTENTION: The conversion shall be carried out in accordance with the requirements of the provincial authorities having jurisdiction and in accordance with the requirements of the ANSI Z223.1 installation code.

This fireplace is manufactured for use with natural gas. Follow the instructions included with the conversion kit if converting to propane.

5.2 Gas Line Installation

CAUTION: Installation of the gas line must only be done by a qualified person in accordance with local building codes, if any. If not, follow ANSI 223.1. Commonwealth of Massachusetts installations must be done by a licensed plumber or gas fitter.

NOTE: The appliance and its individual shutoff valve must be disconnected from the gas supply piping system during any pressure testing of that system at pressures in excess of ½ psi (3.5 kPa). For test pressures equal to or less than ½ psi (3.5 kPa), the appliance must be isolated from the gas supply piping system by closing its individual manual shut-off valve.

- A listed (and Commonwealth of Massachusetts approved) ½ in. (13 mm) tee handle manual shut-off valve and flexible gas connector are to be connected to the ½ in. (13 mm) control valve inlet. If substituting for these components, please consult local codes for compliance.
- This fireplace is equipped with a 3/8" (10 mm) x 18" (457 mm) long flexible gas connector and manual shut-off valve.
- Run gas line into fireplace through gas line hole provided. The gas line should be run to the point of connection where the shut-off valve and flexible gas line will connect.
- Do not run gas line in a manner that would obstruct fan operation.
- For high altitude installations, consult the local gas distributor or the authority having jurisdiction for proper rating methods.

Table 5.1, Inlet Gas Supply Pressures

Fuel	Minimum Pressure	Maximum Pressure
Natural Gas	5"WC (1.25 kPa)	10.5"WC (2.62 kPa)
Propane	12"WC (2.99 kPa)	13"WC (3.24 kPa)

6.0 TERMINATION LOCATIONS

6.1 Vertical Vent Cap Termination

WARNING: This gas appliance must not be connected to a chimney serving any other appliance.

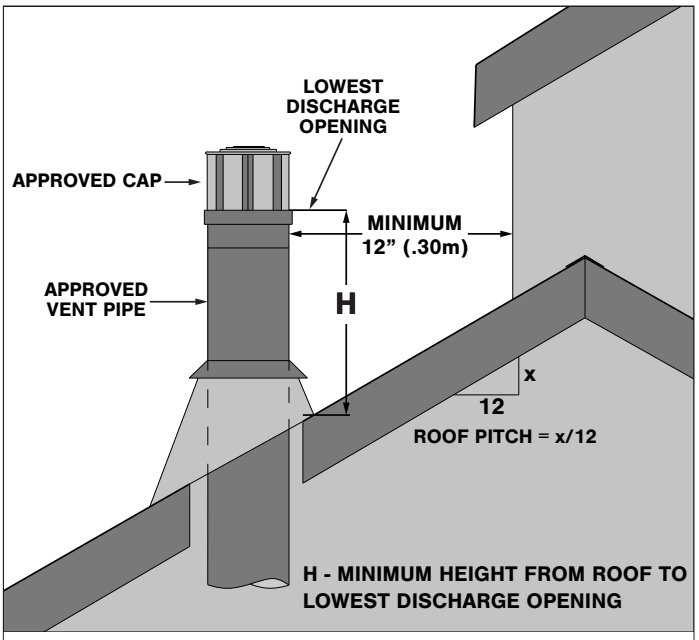

Figure 6.1, Vertical Vent Cap Clearance

	Minimum height (H) from roof	
Roof Pitch	**Feet**	**Meters**
Flat to 6/12	1.0	0.30
Over 6/12 to 7/12	1.25	0.38
Over 7/12 to 8/12	1.5	0.46
Over 8/12 to 9/12	2.0	0.61
Over 9/12 to 10/12	2.5	0.76
Over 10/12 to 11/12	3.25	0.99
Over 11/12 to 12/12	4.0	1.22
Over 12/12 to 14/12	5.0	1.52
Over 14/12 to 16/12	6.0	1.83
Over 16/12 to 18/12	7.0	2.13
Over 18/12 to 20/12	7.5	2.27
Over 20/12 to 21/12	8.0	2.44

6.2 Minimum Termination Clearances

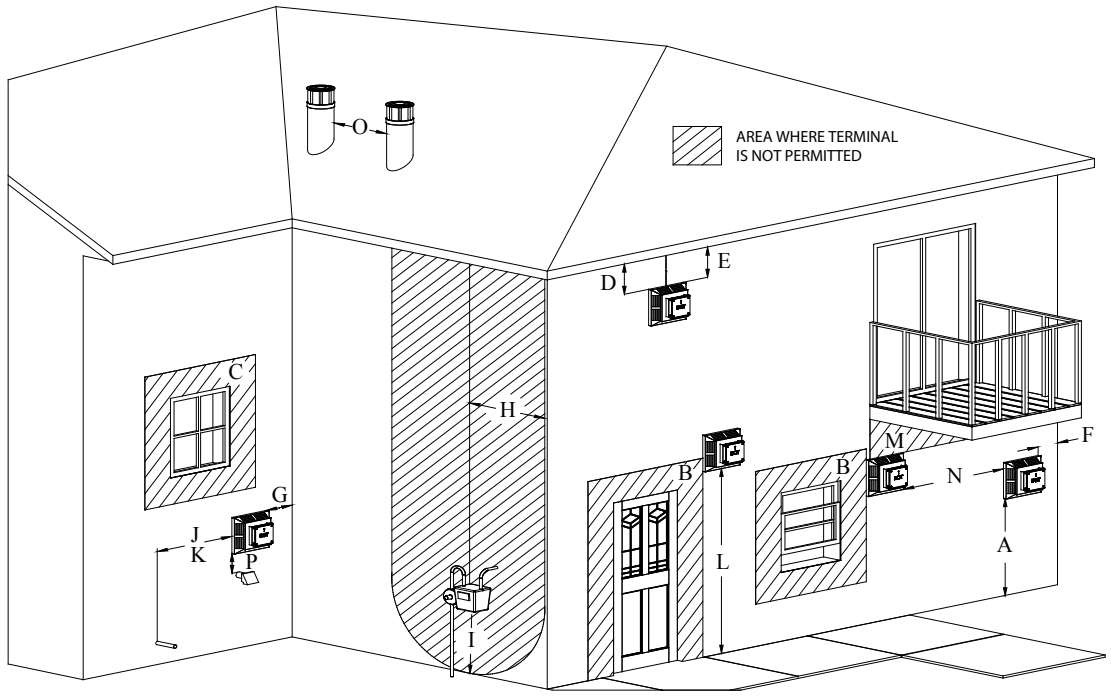

Figure 6.2, Vent Cap Locations

		Canadian installations	US installations
A	Clearance above grade, veranda, porch, deck, or balcony	12 in (30 cm)	12 in (30 cm)
B	Clearance to window or door that may be opened	12 in (30 cm)	9 in (23 cm)
C	Clearance to permanently closed window (recommended to prevent condensation on window)	12 in (30 cm)*	12 in (30 cm)*
D	Vertical clearance to ventilated soffit located above the terminal within a horizontal distance of 2 feet (61 cm) from the cent line of the terminal	24 in (61 cm)*	24 in (61 cm)*
E	Clearance to unventilated soffit	12 in (30 cm)*	12 in (30 cm)*
F	Clearance to outside corner	0 in (0 cm)*	0 in (0 cm)*
G	Clearance to inside corner	12 in (30 cm)*	12 in (30 cm)
H	Clearance to each side of center line extended above meter/regulator assembly	3 ft (91 cm) within a height 15 ft (4.5 m) above the meter/ regulator assembly	*
I	Clearance to service regulator vent outlet	3 ft (91 cm)	*
J	Clearance to non mechanical air supply inlet to building or the combustion air inlet to any other appliance	12 in (30 cm)	9 in (23 cm)
K	Clearance to mechanical air supply inlet	6 ft (1.83 m)	3 ft (91 cm) above if within 10 ft (3 m) horizontally Massachusetts: 10 ft (3 m)
L	Clearance above paved sidewalk or paved driveway located on public property	7 ft (2.13 m)†	*
M	Clearance under veranda, porch deck, or balcony	12 in (30 cm)‡	12 in (30 cm)
N	Clearance between two horizontal terminations	12 in (30 cm)	12 in (30 cm)
O	Clearance between two vertical terminations (may be same height)	12 in (30 cm)	12 in (30 cm)
P	Above furnace exhaust or inlet	12 in (30 cm)	12 in (30 cm)

* Clearance in accordance with local installation codes and the requirements of the gas supplier.

† A vent shall not terminate directly above a sidewalk or paved driveway that is located between two single family dwellings and serves both dwellings.

‡ Permitted only if veranda, porch, deck, or balcony is fully open on a minimum of two sides beneath the floor.

VINYL SOFFIT, VINYL CEILING, AND VINYL OVERHANG DISCLAIMER: Clearances to heat resistant material (i.e. wood, metal). This does not include vinyl. Hussong Manufacturing Co., Inc. will not be held responsible for heat damage caused from terminating under vinyl overhangs, vinyl ceilings, or vinyl ventilated/unventilated soffits.

7.0 VENTING

7.1 Rear Vent Conversion Instructions

IMPORTANT: This appliance has outlets for both top and rear venting. The unused vent exit must have the cover plates in place, and the cover plates must be removed from the exit according to the instructions below to be used.

NOTE: All components removed from the top vent exit will be reinstalled for the rear vent.

7.1.1 Remove Top Vent Collars

1) REMOVE THE ATTACHMENT SCREW SECURING COVER

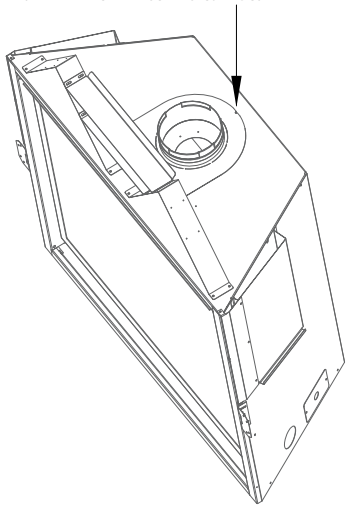

2) REMOVE (4) SCREWS SECURING 6-5/8" (168mm) COMBUSTION AIR INTAKE COLLAR

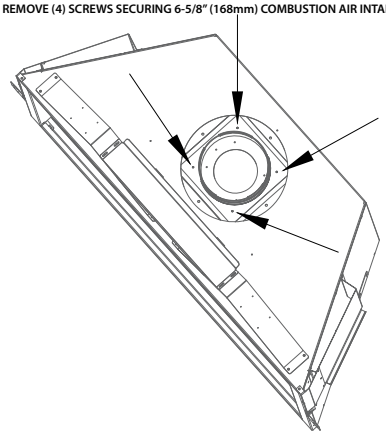

3) REMOVE (6) SCREWS SECURING 4" (101mm) EXHAUST COLLAR

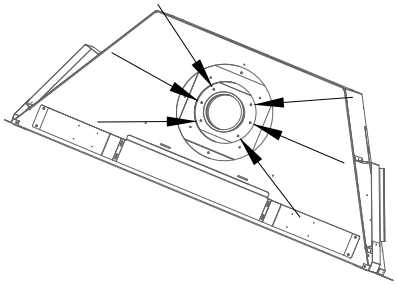

7.1.2 Remove Back Vent Combustion Air Intake and Exhaust Collars

1) REMOVE THE ATTACHMENT SCREW SECURING BACK COVER PLATE

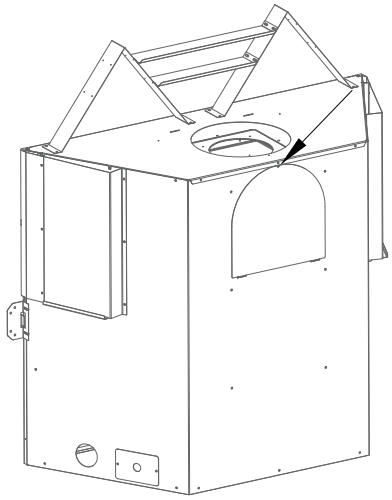

2) REMOVE (4) SCREWS SECURING COMBUSTION AIR INTAKE REAR COVER PLATE

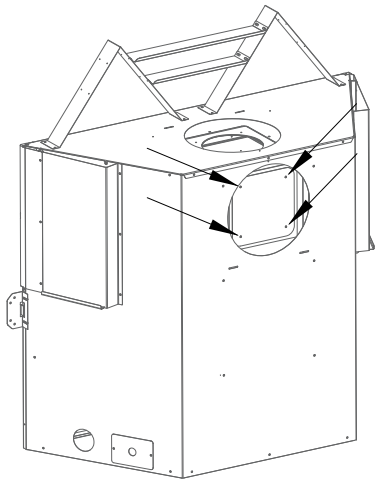

3) REMOVE (6) SCREWS SECURING EXHAUST COVER REAR PLATE

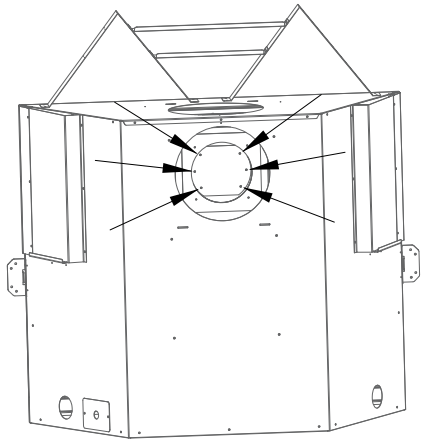

7.1.3 Install Exhaust and Combustion Air Intake Collars to Fireplace Rear

1) INSTALL 4" (101mm) EXHAUST COLLAR TO APPLIANCE REAR. VERIFY GASKET IS IN PLACE. SECURE WITH (6) SCREWS PREVIOUSLY REMOVED.

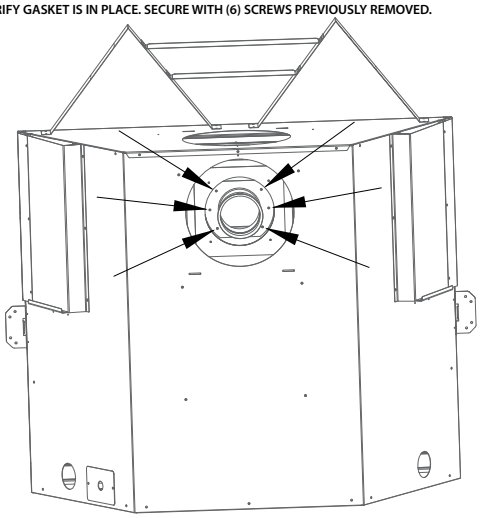

2) INSTALL 6-5/8" (168mm) COMBUSTION AIR INTAKE COLLAR TO APPLIANCE REAR. VERIFY GASKET IS IN PLACE. SECURE WITH (4) SCREWS PREVIOUSLY REMOVED.

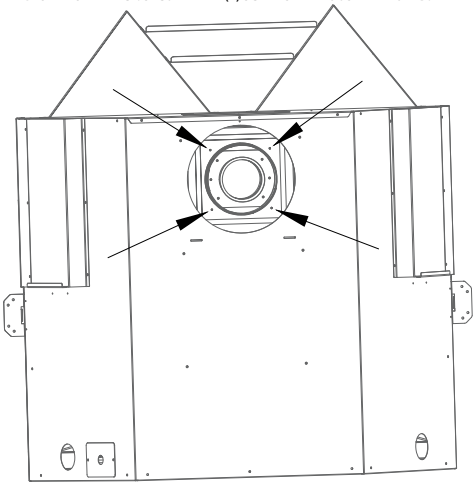

3) INSERT TABS ON REAR COVER PLATE INTO SLOTS. SECURE WITH (1) SCREW PREVIOUSLY REMOVED.

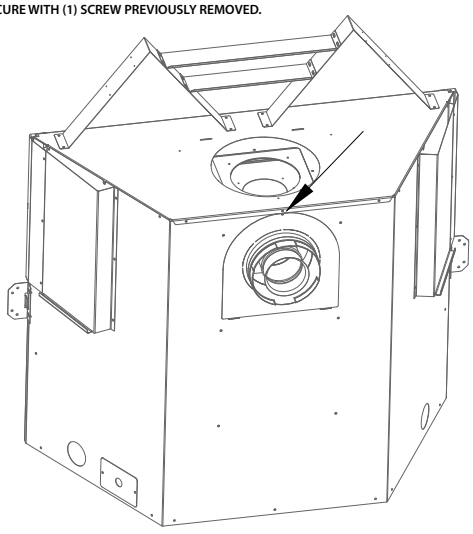

7.1.4 Install Cover Plates to Fireplace Top

WARNING: The cover plates must be installed on the top of the fireplace. DO NOT proceed with the fireplace installation until the vent conversion is completed.

1) INSTALL EXAHUST COVER PLATE TO APPLIANCE TOP. VERIFY GASKET IS IN PLACE. SECURE WITH (6) SCREWS PREVIOUSLY REMOVED.

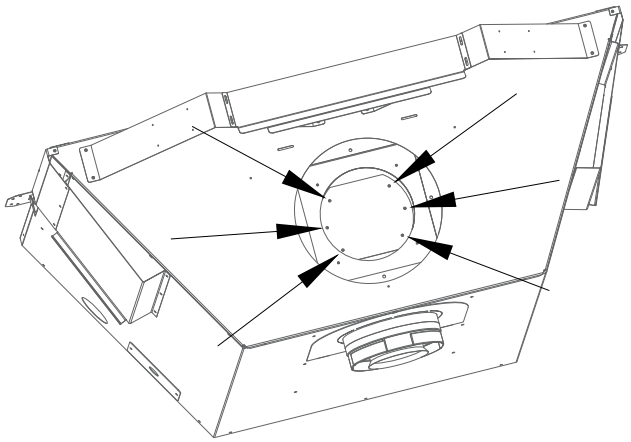

2) INSTALL COMBUSTION AIR INTAKE COVER PLATE TO APPLIANCE TOP. VERIFY GASKET IS IN PLACE.SECURE WITH (4) SCREWS PREVIOUSLY REMOVED.

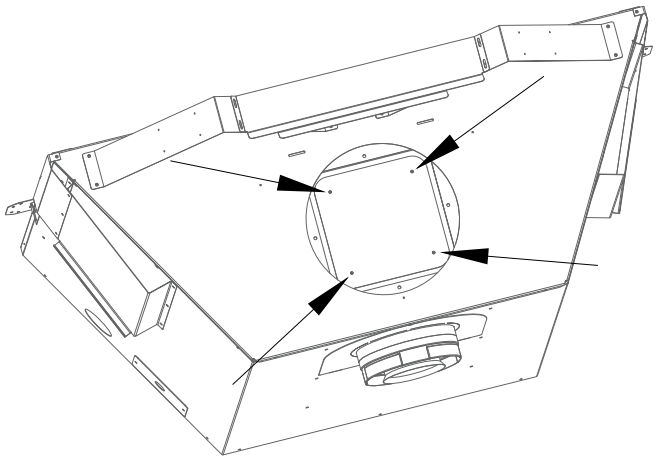

3) INSERT TABS ON OUTER COVER PLATE INTO SLOTS ON APPLIANCE TOP. SECURE WITH (1) SCREW PREVIOUSLY REMOVED.

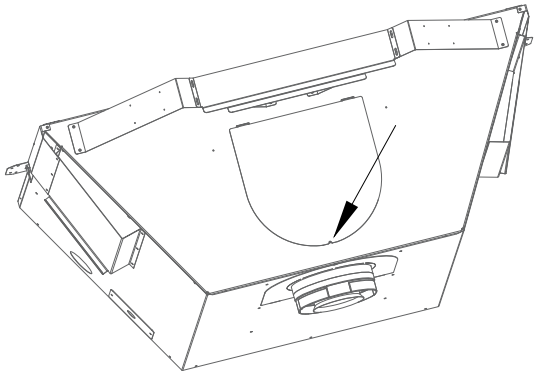

7.2 Approved 4" x 6⅝" Vent Systems

Vent Manufacturer	Direct Vent System	Termination
American Metal Products	Ameri-Vent	Horizontal & Vertical
BDM	Pro-Form	Horizontal & Vertical
ICC	EXCELDirect	Horizontal & Vertical
Kozy Heat	700 Series Flexible Vent System	Horizontal Only
Metal Fab	Direct Vent Chimney **EXCEPT 4DH7 cap**	Horizontal & Vertical
Olympia Venting Supply, Inc.	Ventis Direct Vent	Horizontal & Vertical
Security	Direct Vent Chimney	Horizontal & Vertical
Selkirk	Direct Temp	Horizontal & Vertical
Simpson DuraVent	DirectVent Pro **EXCEPT Snorkel 46DVASNK14**	Horizontal & Vertical

7.3 Venting Requirements

Consult the local and national installation codes to assure adequate combustion and ventilation air is available. Venting requirements apply to both natural gas and propane.

NOTE: Wall thimble products that comply with the required clearance to combustibles must be installed for all horizontal vent runs that pass through interior or exterior walls. These wall thimble products may be insulated using unfaced insulation products listed as noncombustible per ASTM E 136.

NOTE: Attic insulation shields may be insulated using unfaced insulation products listed as noncombustible per ASTM E 136.

- Flame height and appearance will vary depending upon venting configuration and the type of fuel used.
- Refer to the vent manufacturer's installation manual for complete installation instructions. Vent installation must conform with venting requirements and restrictions as outlined in this manual.
- Provide a means for visually checking the vent connection to the appliance after the fireplace is installed.
- A minimum of 1 in (25 mm) clearance on all side of the vertical pipe must be maintained.
- A minimum of 1 in (25 mm) clearance on all side of the horizontal vent flex pipe must be maintained.
- A minimum of 1-1/2 in (38 mm) top clearance and a minimum of 1 in (25 mm) bottom and side clearances for the horizontal rigid pipe must be maintained.

7.4 Use of Elbows

- **MAXIMUM NUMBER OF 90° ELBOWS: 4**
- For each additional 90° elbow used after the first elbow, 3 ft (91.4 cm) must be subtracted from maximum venting allowed.
- For each 45° elbow used, 1½ ft (457 mm) must be subtracted from maximum venting allowed.
- (2) 45° degree elbows may be used in place of (1) 90° elbow.

7.5 Restrictor Assembly and Installation

Burner flame appearance and characteristics are affected by altitude, fuel quality, venting configuration, and other factors. To achieve desirable flame appearance, the vent exhaust may be restricted by the restrictor plate (included in components packet).

The restrictor plate is shipped with all inner rings intact, and when installed, provides the most vent restriction. There are (2) inner rings that can be knocked out. The inner most ring knocked out will create less restriction, and the outer most ring knocked out will create the least amount of restriction.

Section 11.2.2 Restrictor on page 46 outlines restrictor recommendations depending on burner flame appearance, and instructions on installation after venting is completed.

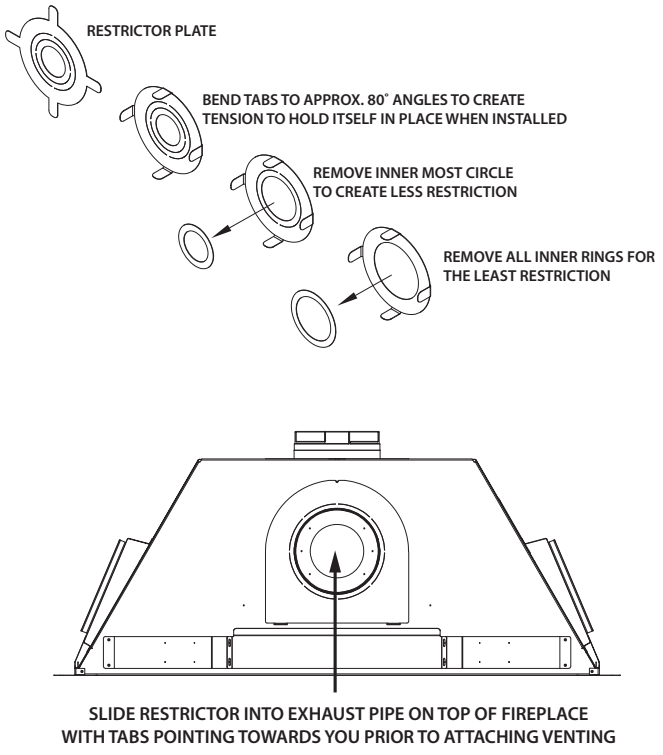

Figure 7.1, Restrictor Assembly and Installation

7.6 Top Venting

IMPORTANT: Horizontal vent sections require ¼ in (6 mm) rise for every 12 in (305 mm) of travel.

7.6.1 Vertical Terminations

Table 7.1, NG/Propane - Minimum / Maximum Vertical Terminations			
Minimum Vertical Length		**Maximum Vertical Length**	
3 ft	914 mm	50 ft	15.2 m

7.6.2 Combination Venting

Table 7.2, NG/Propane - Minimum Horizontal Terminations					
Minimum Vertical Rise (V_{MIN})		**Minimum Horizontal Run (H_{MIN})**		**Maximum Horizontal Run (H_{MAX})**	
9 in	229 mm	6 in	152 mm	18 in	457 mm
15 in	381 mm	6 in	152 mm	48 in	1219 mm
24 in	609 mm	6 in	152 mm	8 ft	2.4 m
36 in	914 mm	6 in	152 mm	12 ft	3.7 mm
48 in	1219 mm	6 in	152 mm	20 ft	6.1 mm

Table 7.3, NG/Propane - Max Vertical / Max Horizontal Combination					
Maximum Vertical Rise		**Maximum Horizontal Run**		**Total Length**	
25 ft	7.6 m	25 ft	7.6 m	50 ft	15.2 m
Maximum number of 90° elbows: 4					

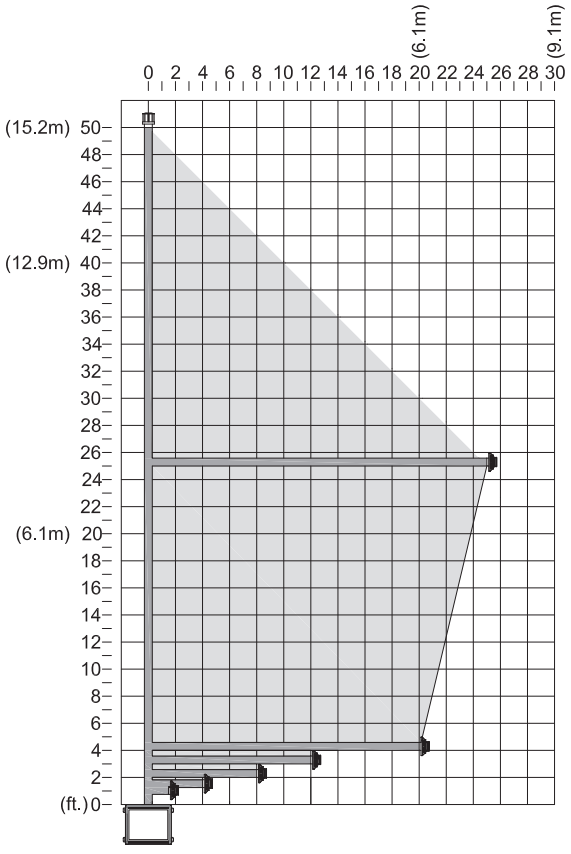

Figure 7.2, NG/Propane - Top Vent Combination Venting (V/H)

DIAG.1 TOP VENTING VERTICAL & HORIZONTAL TERMINATIONS)

(A) Stand-off Brackets
(B) Stand-off Heat Shields
(C) 90° Elbow
(D) Termination Cap

NATURAL GAS AND PROPANE
3ft (914mm) MIN / 50ft (15.2m) MAX

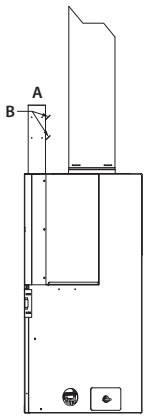

CORNER INSTALLATION - NATURAL GAS AND PROPANE
9" (229mm) VERT. MIN + 90° ELBOW + 18" (457mm) HORZ MAX
15" (381mm) VERT. MIN + 90° ELBOW + 48" (1219mm) HORZ MAX

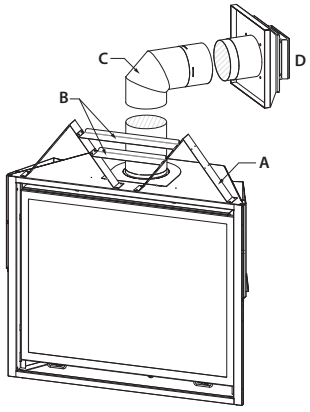

NATURAL GAS AND PROPANE
9" (229mm) VERT MIN + 90° ELBOW + 6" (152mm) HORZ MIN / 18" (457mm) HORZ MAX
15" (381mm) VERT MIN + 90° ELBOW + 6" (152mm) HORZ MIN / 48" (1219mm) HORZ MAX
24" (609mm) VERT MIN + 90° ELBOW + 6" (152mm) HORZ MIN / 8' (2.4m) HORZ MAX
36" (914mm) VERT MIN + 90° ELBOW + 6" (152mm) HORZ MIN / 12' (3.7m) HORZ MAX
48" (1219mm) VERT MIN + 90° ELBOW + 6" (152mm) HORZ MIN / 20' (6.1m) HORZ MAX

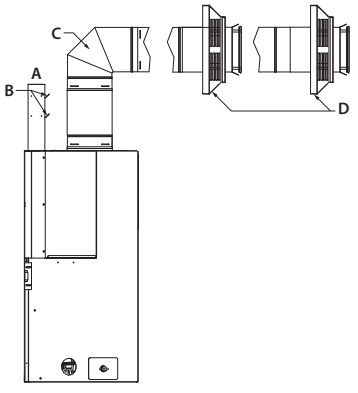

7.7 Rear Venting

IMPORTANT: Horizontal vent sections require ¼ in (6 mm) rise for every 12 in (305 mm) of travel.

7.7.1 Horizontal Terminations

Table 7.4, NG/Propane - Minimum / Maximum Horizontal Venting			
Minimum Horizontal Length (H_{MIN})		Maximum Horizontal Length (H_{MAX})	
6 in	152 mm	24 in	610 mm

Table 7.5, NATURAL GAS ONLY REAR VENT OPTION		
Horizontal Venting	Maximum Horizontal Length	
45° elbow	18 in	457 mm

7.7.2 Combination Venting

Table 7.6, NG/Propane - Minimum / Maximum Vertical Terminations				
Horizontal to Vertical Venting	Minimum Vertical Length		Maximum Vertical Length	
90° elbow	24 in	609 mm	50 ft	15.2 m

Table 7.7, NG/Propane - Max Vertical / Max Horizontal Combination					
Maximum Vertical Rise		Maximum Horizontal Run		Total Length	
25 ft	7.6 m	25 ft	7.6 m	50 ft	15.2 m
Maximum number of 90° elbows: 4					

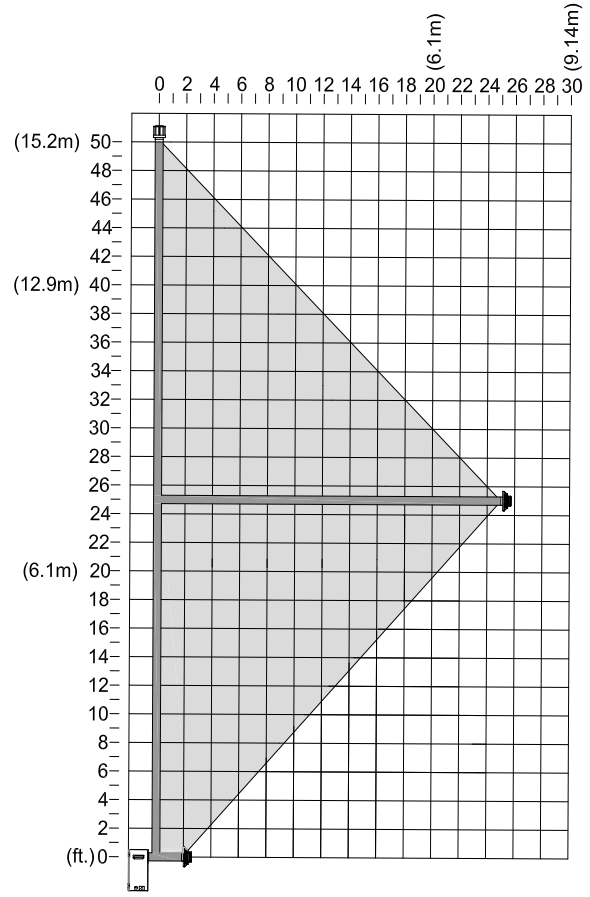

Figure 7.3, NG/Propane Rear Vent Combination Venting (H/V)

DIAG.2 REAR VENTING (HORIZONTAL & VERTICAL TERMINATIONS)

(A) Stand-off Brackets
(B) Stand-off Heat Shields
(C) 90° Elbow
(D) Termination Cap

NATURAL GAS AND PROPANE
6" (152mm) HORZ MIN/24" (610mm) HORZ MAX
NG OPTION ONLY: 45° ELBOW +18" (457mm) MAX

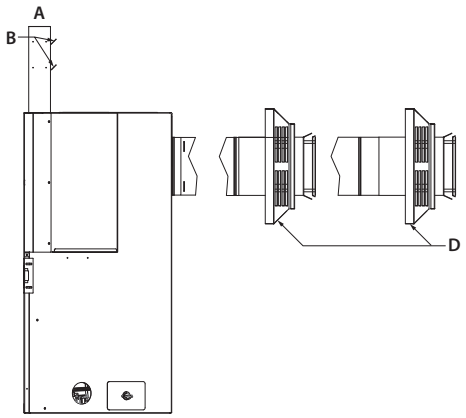

NATURAL GAS AND PROPANE
90° ELBOW + 24" (609mm) VERT MIN/50 ft (15.2m)

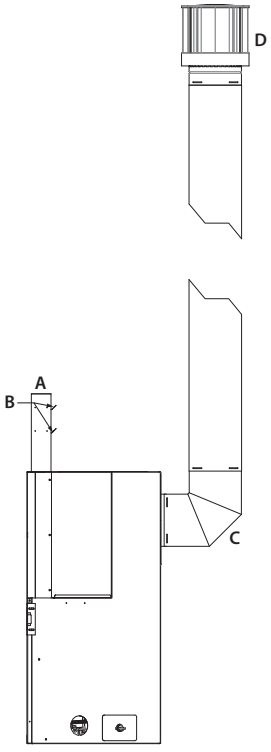

7.8 #700-2 Series Direct Vent Termination Kit(s)

IMPORTANT: The flex pipe is permanently attached to the exterior plate. DO NOT ATTACH either #745-2 or #718-2 termination kit to fireplace (or extension kit) until it has passed through the wall. Install termination plates to the outside wall exterior.

IMPORTANT: The minimum bend radius to center is 6 in (152 mm) required for installation of the flexible vent pipe. Care should be taken when installing to avoid a tight bend that may cause abrasion or damage to the flexible pipe.

- If terminating against vinyl siding, a vinyl siding protector must be used (included with the #745-2 and #718-2 direct vent kits). Follow instructions included.
- Each #746-2 extension kit contains enough 4" & 7" flexible aluminum pipe to extend chimney an additional 6 ft (1.83 m).

7.8.1 Assembly and Installation

1. Attach vinyl siding protector (G) (not shown).
2. Mount the required wall thimble (H) with 1 in (25 mm) top clearance and 1 in (25 mm) side clearance to the exterior wall, and seal.
   (OPTIONAL) insulate the wall thimble with any unfaced insulation products listed as non-combustible per ASTM E 136.
3. Apply a liberal bead of exterior sealant around outer edge of termination box (A). Place assembly through the wall-pass through in exterior wall, and secure with (4) screws through the four holes (B).
4. Form the 4" & 7" flexible aluminum pipes on termination kit (#745-2 or #718-2), and if applicable, on each extension kit.
5. Gently pull 4" & 7" pipes down to the top of the fireplace, or if applicable, the extension kit.
   IMPORTANT: DO NOT stretch extension kit beyond 6 ft. (1.83 m); DO NOT stretch beyond what is required. It is very difficult to decompress flex pipes once stretched.
6. Place a bead of sealant outside 4" flex pipe collar (C) (end with EXTERNAL LIP) and sliding the collar into 4" pipe on extension kit or top of fireplace (D). Secure with 3 evenly spaced screws.
7. Place a bead of sealant inside 7" flex pipe collar (E) (end with the INTERNAL lip), sliding the collar over 7" pipe on top of fireplace (F). Secure with 3 evenly spaced screws.
8. If additional extension kits are required, repeat Steps 4 and 5, placing 4" & 7" pipes onto previous extension kit.

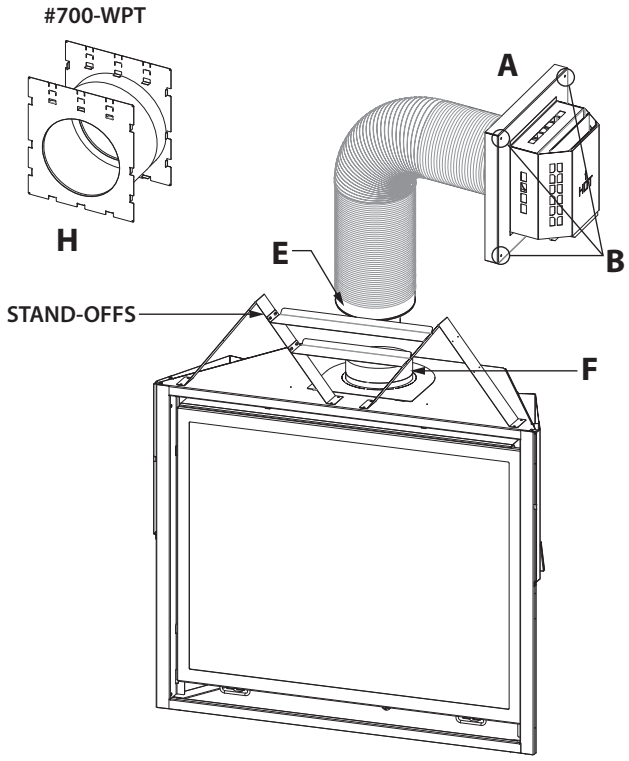

LEGEND	
A	Termination box
B	Holes in exterior wall plate (only 3 shown)
C	4" flex pipe collar (not shown)
D	4" pipe on fireplace or extension kit (not shown)
E	7" flex pipe collar
F	7" pipe on fireplace or extension kit
G	Vinyl firestop (not shown)
H	Wall Thimble with 1 in (25 mm) top clearance

Figure 7.4, Installation and Assembly of #700-2 Series

8.0 FIREPLACE SETUP

8.1 Glass Frame Assembly

WARNING: Do not operate this fireplace with the glass removed, cracked, or broken. Replacement of the glass assembly, should be done by a licensed or qualified service person.

8.1.1 Remove Glass Frame Assembly

WARNING: Do not remove the glass assembly when hot.

1. Locate (2) spring-loaded latches securing the glass assembly at the bottom of the firebox.
2. Pull the spring-loaded latches out and down to release the bottom of the glass assembly.
3. Life glass assembly up and off of the (2) tabs located at the top of the firebox.

8.1.2 Install Glass Frame Assembly

1. Align the slots on top of the glass assembly over the tabs at the top of the firebox while lowering the bottom of the glass assembly into position.
2. Pull the spring-loaded latches out and up to secure the bottom of glass to the bottom of the fireplace.

8.2 Light Kit

ATTENTION: If converting to propane do so now before installing any media kit. Follow instructions included with the conversion kit (sold separately).

CAUTION: Disconnect all electric power from fireplace before performing any of these tasks.

NOTE: To avoid damage and prolong the life of halogen bulbs, never touch with bare hands. Always use a soft cloth when handling.

1. Remove the safety barrier and glass valance.
2. Remove log set and refractory panels (if installed).
3. Remove the air deflector, burner assembly, and burner heat shield.
4. Install halogen light bulbs into the (4) receptacles on the light kit assembly.
5. Reinstall the burner heat shield, burner assembly, and air deflector.
6. Place the crushed glass media (included with the fireplace) into cavity in front of the burner.
7. Randomly place klinkers on top of glass media.
8. Reinstall the log set, glass valance, and safety barrier.

8.3 Bottom Frame Removal and Installation

To access the control module housing, the bottom frame will need to removed. It must be reinstalled after servicing to maintain clearances .

1. Remove the safety barrier.
2. Locate the bottom frame.
3. Lift the bottom frame up and out of slots on firebox floor.
4. To reinstall, align the tabs on the bottom frame and lower into position.
5. Reinstall safety barrier.

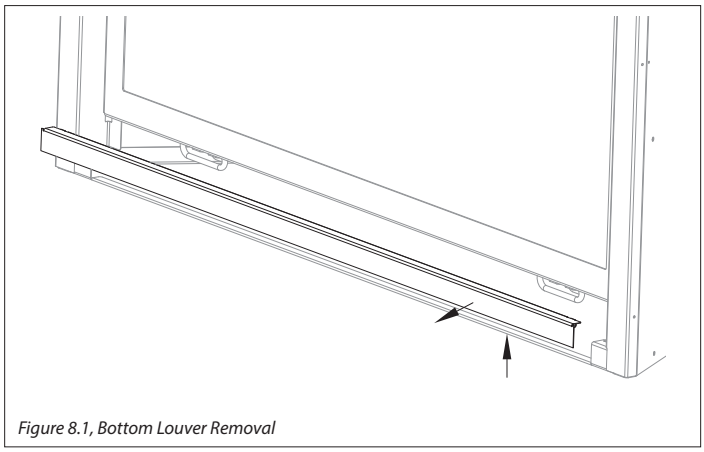

Figure 8.1, Bottom Louver Removal

8.4 #B41-500 Log Set Installation

CAUTION: Do not place logs directly over burner port holes. Improper log placement may affect flame appearance and cause excessive soot to build upon the logs and glass.

- If converting to propane, complete the conversion before installing the log set. Follow the conversion instructions included with the kit.
- Log numbers are located on the bottom of each log. Refer to the following instructions and illustrations for proper log placement.

1. Position the ember panel in front of the burner.
2. Align the holes in bottom of base logs (BP1 to BP4) with the mounting pins on the burner. Push logs down onto pins to seat.
3. Align logs BP5 and BP6 with the notches on the base logs.
4. Align logs BP7 and BP8 as shown in Figure 8.3.
5. Distribute rockwool embers onto the logs and burner using a stiff bristle brush.

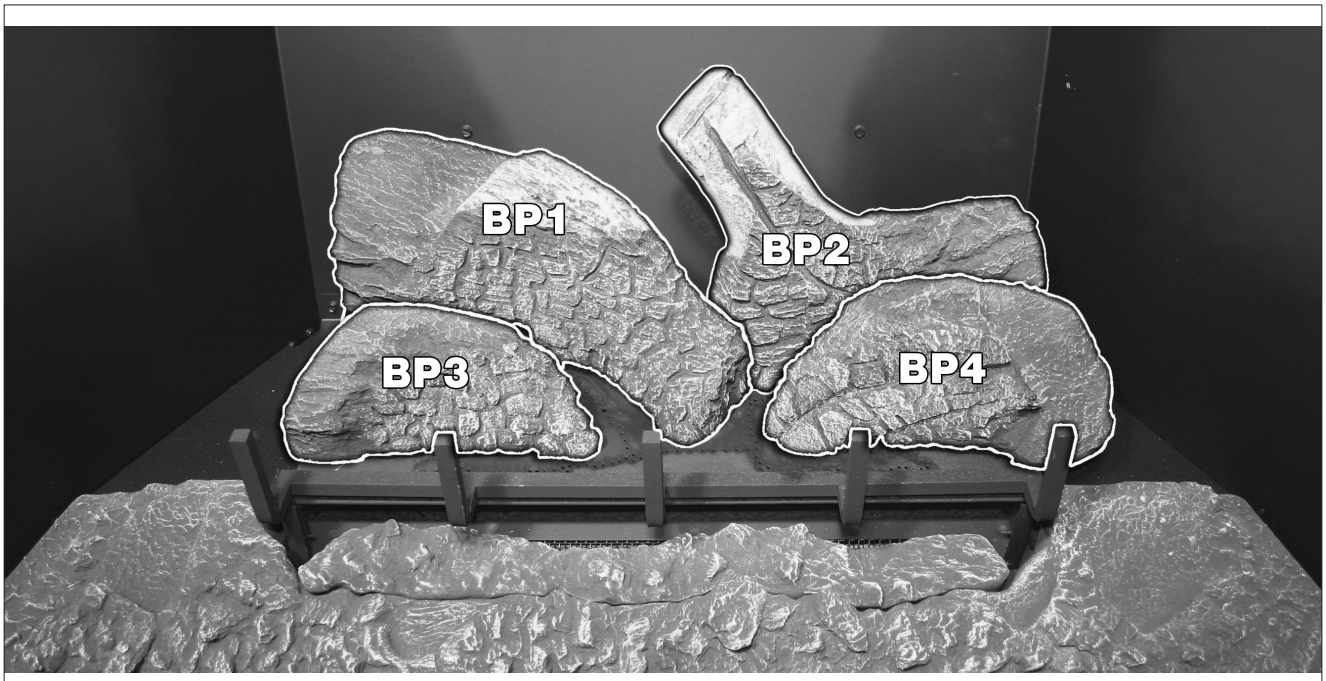

Figure 8.2, Base Logs

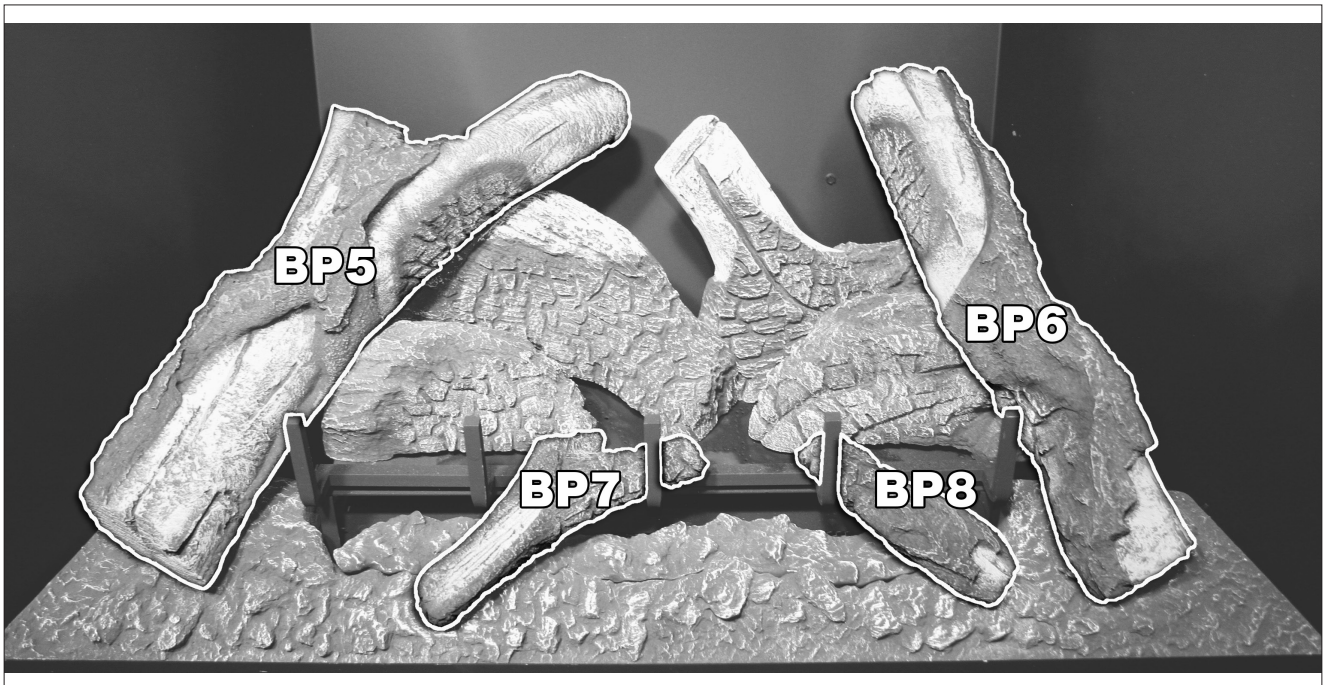

Figure 8.3, Installed Log Set

8.5 #B41-B501 Log Set Installation

CAUTION: Do not place logs directly over burner port holes. Improper log placement may affect flame appearance and cause excessive soot to build upon the logs and glass.

- If converting to propane, complete the conversion before installing the log set. Follow the conversion instructions included with the kit.
- Log numbers are located on the bottom of each log. Refer to the following instructions and illustrations for proper log placement.

1. Position the ember panel in front of the burner.
2. Align the holes in bottom of base logs (41B-1 to 41B-4) with the mounting pins on the burner. Push logs down onto pins to seat.
3. Align logs 41B-5 and 41B-6 with the notches on the base logs.
4. Align logs 41B-7 and 41B-8 as shown.
5. Distribute rockwool embers onto the logs and burner using a stiff bristle brush.

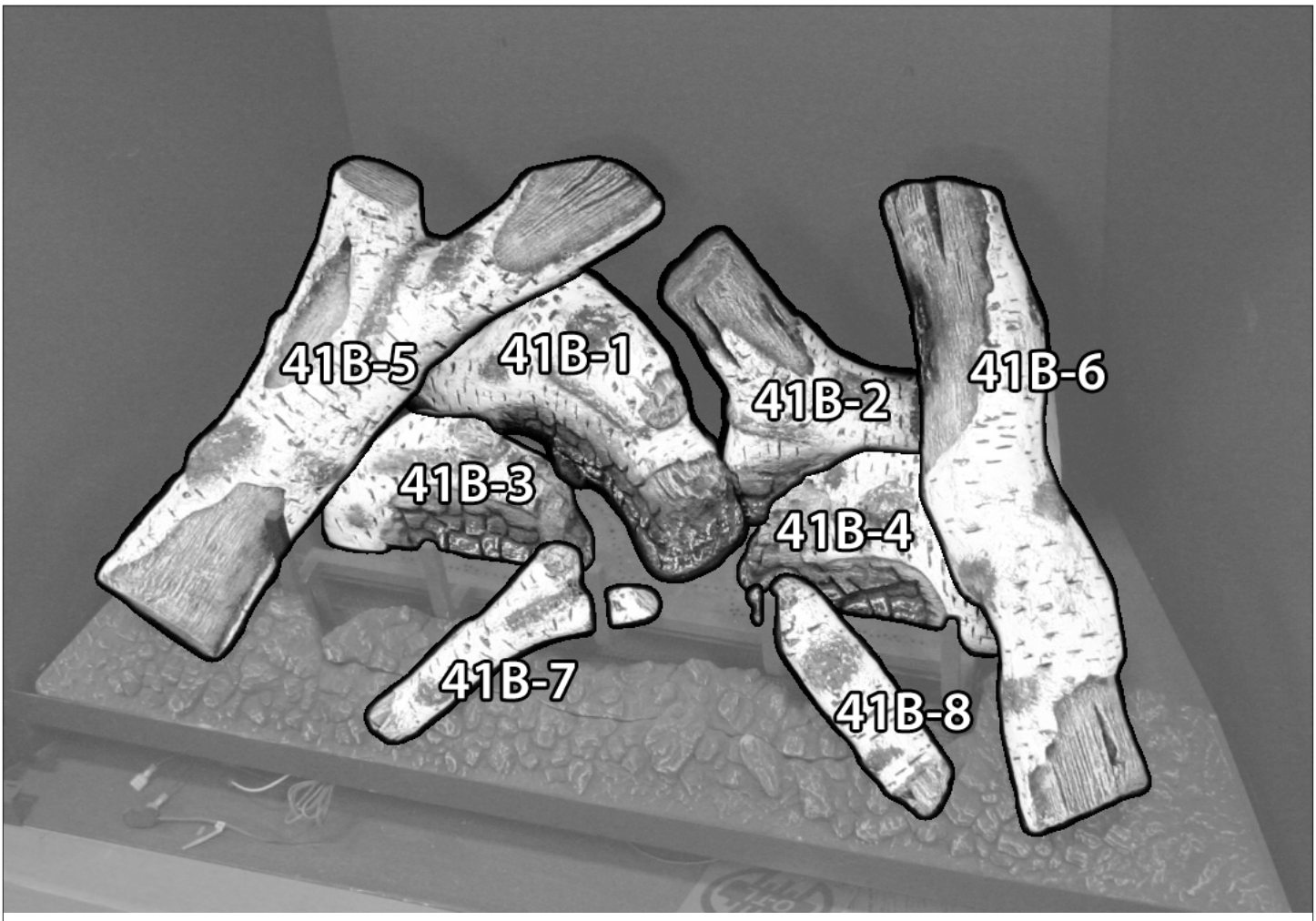

Figure 8.4, #B41-B501 Log Set Installation

8.6 Control Board Removal and Installation

WARNING: If burner and/or pilot have been burning, use appropriate protection to avoid burns or damage to personal property before removing any components. DO NOT OPERATE THIS APPLIANCE WITHOUT THE SEALING GASKET (LOCATED UNDER THE CONTROL BOARD) IN PLACE. IF GASKETING IS DAMAGED, IT MUST BE REPLACED.

CAUTION: Check all connections for leaks with soapy water, whether field or factory made.

8.6.1 Control Board Removal

1. Disconnect electrical power.
2. Locate the manual valve installed by your qualified service technician.
3. Turn the manual valve clockwise to the OFF position.
4. Remove the safety barrier and glass frame assembly.
5. Remove log set.
6. Remove air deflector (2) screws. Lift air deflector up and slide right to release.
7. Remove burner assembly from firebox (2) screws.
8. Remove refractory or enamel panel set (if installed) and bottom refractory panel.
9. Remove burner heat shield (2) screws and secondary heat shield.
10. Remove and save (8) screws securing the control board.
11. Lift the control board out of the firebox, being careful not to damage the sealing gasket underneath.

8.6.2 Control Board Installation

1. Place control board in the firebox, aligning the holes in the control board with the holes in the firebox bottom.
   VERIFY SEALING GASKET IS IN PLACE.
2. Secure the control board to the firebox using (8) screws previously removed.
3. Reinstall the secondary heat shield and the burner heat shield. Verify entire assembly (the front flange) is inside firebox.
4. Reinstall bottom refractory panel.
5. Reinstall refractory or enamel panel set, if previously removed.
6. Reinstall burner assembly. Position burner venturi over burner orifice and secure the assembly to the heat shield with (2) screws previously removed.
7. Reinstall log set.
8. Reinstall the glass frame assembly and safety barrier.
9. Turn the manual valve counterclockwise to the ON position.
10. Reconnect electrical power.
11. Verify proper log placement, operation of fireplace, and any electrical components.

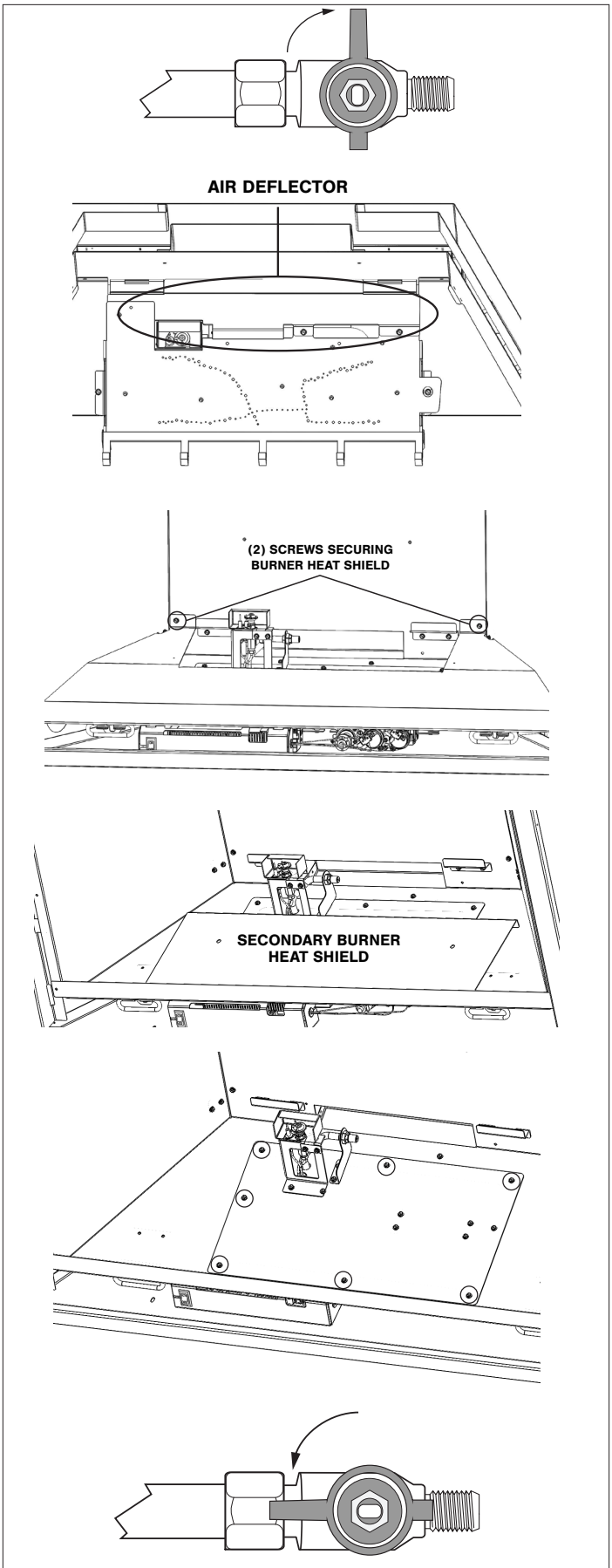

Figure 8.5, Control Board Removal and Installation

9.0 ELECTRICAL INFORMATION

WARNING: Do not use this fireplace if any part has been under water. Immediately call a qualified service technician to inspect this appliance and to replace any part of the control system and any gas control which has been under water.

WARNING - Electrical Grounding Instructions: This appliance is equipped with a three-prong (grounding) plug for your protection against shock hazard and should be plugged directly into a properly grounded three-prong receptacle. Do not cut or remove the grounding prong from this plug.

9.1 Electrical Specifications

This appliance, when installed, must be electrically grounded in accordance with local codes, or in the absence of local codes, with the National Electrical Code, ANSI/NFPA 70, or the Canadian Electrical Code, CSA C22.1.

9.2 Wiring Requirements

- The IFC System Module requires 120V of electricity and/or batteries to operate.
- Using the battery back-up will operate the burner only.
- Optional fan and light components will not function on battery back up power.

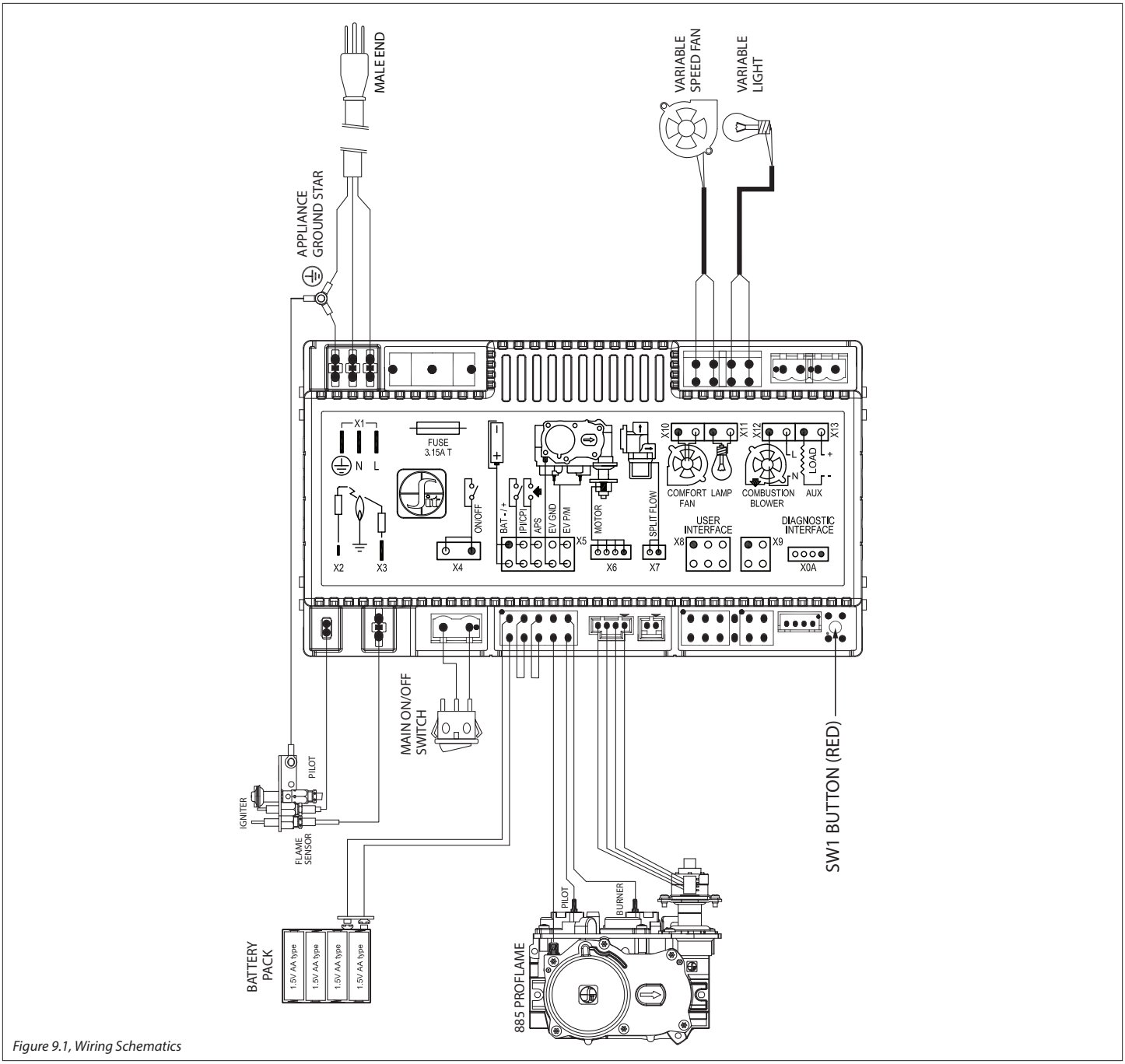

Figure 9.1, Wiring Schematics

10.0 OPERATING INSTRUCTIONS

FOR YOUR SAFETY READ BEFORE OPERATING

WARNING: If you do not follow these instructions exactly, a fire or explosion may result causing property damage, personal injury, or loss of life.

A. This appliance is equipped with an ignition device which automatically lights the pilot. Do not try to light the pilot by hand.

B. **BEFORE OPERATING** smell around the appliance area for gas. Be sure to smell next to the floor because some gas is heavier than air and will settle on the floor.

WHAT TO DO IF YOU SMELL GAS

- Do not try to light any appliance.
- Do not touch any electric switch; do not use any phone in your building.
- Immediately call your gas supplier from a neighbor's phone. Follow the gas supplier's instructions.
- If you cannot reach your gas supplier, call the fire department.

C. Use only your hand to turn the gas control manual valve. Never use tools. If the valve will not turn by hand, do not try to repair it; call a qualified service technician. Force or attempted repair may result in a fire or explosion.

D. Do not use this appliance if any part has been under water. Immediately call a qualified service technician to inspect the appliance and to replace any part of the control system and any gas control that has been under water.

WARNING

Do not operate appliance with the glass front removed, cracked, or broken. Replacement of the glass should be done by a licensed or qualified service person.

Under no circumstances should any solid fuel (wood, coal, paper, cardboard, etc.) be used in this appliance.

Children and adults should be alerted to the hazards of high surface temperature and should stay away to avoid burns or clothing ignition.

CAUTION

Clothing or other flammable material should not be placed on or near the appliance.

Young children should be carefully supervised when they are in the same room as the appliance. Toddlers, young children and others may be susceptible to accidental contact burns. A physical barrier is recommended if there are at risk individuals in the house. To restrict access to a fireplace or stove, install an adjustable safety gate to keep toddler, young children and other at risk individuals out of the room and away from hot surfaces.

OPERATING INSTRUCTIONS

1. STOP! Read all the safety information above on this page.
2. Press the wireless remote OFF button.
3. Turn off all electric power to the appliance.
4. This appliance is equipped with an ignition device which automatically lights the pilot. Do not try to light the pilot by hand.
5. Locate the manual valve installed by your qualified service technician.
6. Turn the manual valve clockwise to the OFF position.
7. Wait five (5) minutes to clear out any gas. Then, smell for gas, including near the floor. If you smell gas, STOP! Follow 'B' in the safety information above. If you do not smell gas, go to the next step.
8. Turn the manual valve counterclockwise to the ON position.
9. Turn on all electric power to the appliance.
10. Press the wireless remote ON button.
11. If the appliance will not operate, follow the instructions, "To Turn Off Gas To Appliance" and call your service technician or gas supplier.

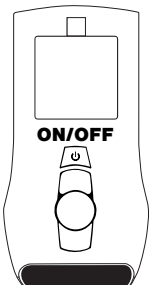

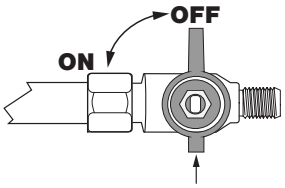

TO TURN OFF GAS TO APPLIANCE

1. Press the wireless remote OFF button.
2. Turn off all electric power to the appliance if service is to be performed.
3. Locate the manual valve installed by your qualified service technician.
4. Turn the manual valve clockwise to OFF position.

NOTE

When this fireplace is initially lit, condensation will appear on the glass. This is normal in all gas fireplaces and will disappear after several minutes. A paint smell will occur during the first few hours of burning. It is recommended to leave the fan off during this period to help speed the paint curing process. This fireplace may produce noises of varying degree as it heats and cools due to metal expansion and contraction. This is normal, and does not affect the performance or longevity of the fireplace.

10.1 Setup Proflame 2 IFC Module

1. Set the main ON/OFF rocker switch in the OFF position.
2. Install (4) AA batteries (included in the components packet) into backup battery holder on the control module.
3. Install (3) AAA batteries (included in the components packet) in the remote control battery bay, located at the base of the remote.
4. Connect the IFC Module to an AC power supply.

10.2 Initialize the Control System

IMPORTANT: Remove all packaging and combustible material from the firebox before initializing the control system.

NOTE: Performing the next steps will initiate pilot start-up in manual mode, where the pilot igniter will spark repeatedly. The pilot will ignite if gas is supplied to the fireplace.

1. Locate the red SW1 button the IFC module.
2. Press the SW1 button. The IFC module will BEEP (3) times and illuminate an amber LED. This indicates the receiver is ready to synchronize with the transmitter.
3. Within (5) seconds, push the ON/OFF button on the remote control. The receiver will BEEP (4) times to indicate the transmitter's command is accepted, and is set to the transmitter's particular code. The pilot will automatically ignite.
4. Press the remote control ON/OFF button again. The pilot will extinguish, confirming the remote control command. The control system is now initialized.
5. Set the main ON/OFF rocker switch to ON position for remote control operation of the main burner and fireplace features.

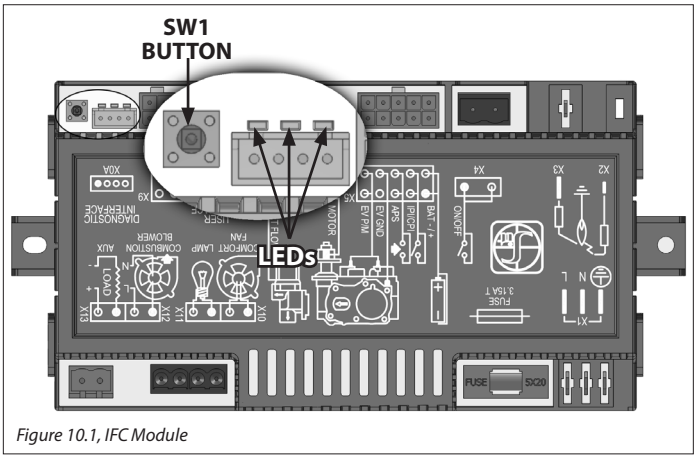

Figure 10.1, IFC Module

10.3 Reset the System for Manual Operation

1. Set the ON/OFF rocker switch to OFF position.
2. Press the red SWI button on the IFC module until it emits (3) beeps and an amber LED is illuminated.
3. Within (5) seconds, press the red SWI button again. This will close synchronization with the remote control. The pilot will automatically light.

- Turn the main burner ON by setting the ON/OFF switch in ON position. The main burner will only operate on HI.
- Turn the main burner OFF by setting the ON/OFF switch in the OFF position. The pilot will remain lit even if burner is turned off, provided CPI mode is turned on.

10.4 Automatic Safety Restart

- This system will execute an automatic turn OFF command for approximately (5) seconds within (24) hours of a continued pilot flame ignition to perform a safety check. This allows the system to verify correct safety functions.
- After the turn OFF sequence is completed, the IFC module will re-execute the latest command.

10.5 Backup Battery Operation

This appliance will operate on the backup battery pack when electric power is interrupted, or in a power outage. The lifespan of the backup batteries depend on various factors, such as the quality of the batteries, number of ignitions, et cetera.

- When the backup battery pack is low, the IFC module will emit a double-beep while receiving an ON/OFF command.
- No commands will be accepted after this alert until the back up batteries are replaced.
- Once replaced, the IFC module will emit a 'beep' as soon as it is powered.

10.6 IFC Module Ignition Sequence

The IFC module will try (2) times for ignition, each lasting approximately (60) seconds, with approximately (35) seconds between each attempt.

1. With the system in OFF position, press the remote control ON/OFF key. Approximately (4) seconds after this key is depressed, the IFC module will generate sparks to the pilot hood.
2. First ignition attempt will generate sparks for (60) seconds.
3. If there is no flame ignition (rectification) within the (60) second time frame, the IFC module will stop generating sparks for approximately (35) seconds.
4. After (35) seconds of wait time, the IFC module will generate sparks for another (60) seconds for the second ignition attempt.
5. If there is no positive rectification after (60) seconds, the IFC module will go into a lock out. The red LED will blink (3) times, in intervals, until the system is reset.

10.6.1 Reset IFC Module after Lockout

10.6.1.1 ON/OFF Rocker Switch

1. Set the ON/OFF rocker switch to the OFF position.
2. After approximately (2) seconds, move the switch to the ON position. The ignition sequence will start again.

10.6.1.2 Remote Control ON/OFF Key

1. Press the remote control ON/OFF key to turn the system OFF.
2. After approximately (2) seconds, press the ON/OFF key again. The ignition sequence will start again.

10.6.1.3 Cycling Flame

1. Press the remote control down arrow key during flame adjustment mode to reduce the flame to OFF (indicated by OFF displayed on the LCD screen).
2. After approximately (2) seconds, press the up arrow key. The ignition sequence will start again.

10.7 Additional Diagnostic Information

Low Battery Condition (<4V) Remote Control:

- Battery Icon will appear on LCD remote control display.
- Replace batteries.

Low Battery Condition (<4V) Battery Backup:

- The red LED Indicator will blink (1) time in intervals.
- A low double-beep emits from the IFC control module when it receives an ON/OFF command from the remote control..
- Replace Batteries.

Pilot Flame Error Condition:

- Red LED Indicator will blink (2) times in intervals. Contact your dealer if this occurs.

System Lock Out Condition:

- Red LED Indicator will blink (3) times in intervals.
- Verify gas is turned on.
- Verify sensor is not shorted.
- Follow Section 10.2 Initialize the Control System.

PROFLAME 2 TRANSMITTER

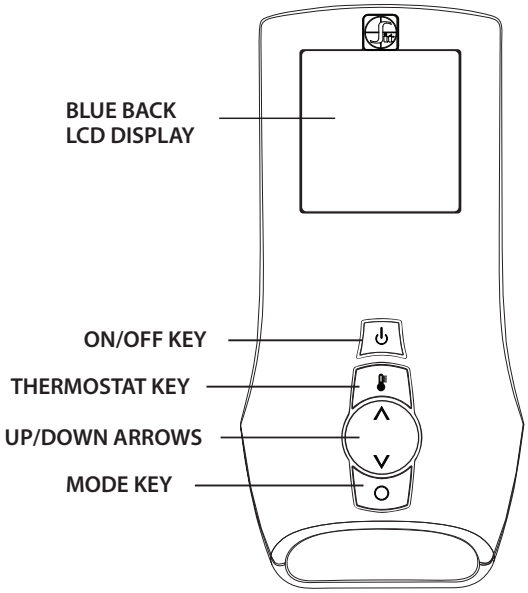

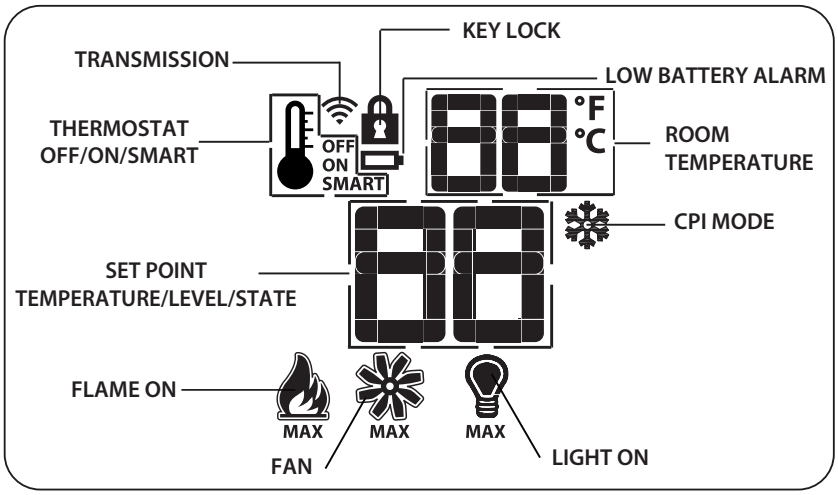

10.8 Remote Control Operation

10.8.1 Temperature Display

1. With the system in the OFF position, simultaneously press the thermostat key and the mode key to change degrees from °F to °C.
2. Visually check the LCD screen to verify either °F or °C is displayed on the right side of the room temperature display.

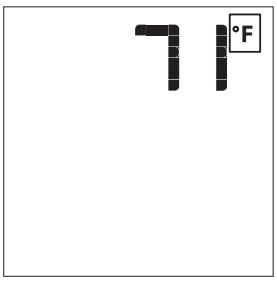

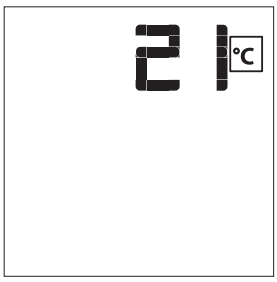

10.8.2 Key Lock

This function locks the keys to avoid unsupervised operation. Once activated, a lock icon will appear on the LCD screen.

1. Simultaneously press the mode key and the up arrow key to activate or deactivate this function.

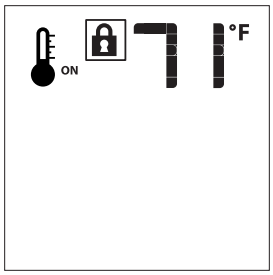

10.8.3 Pilot Ignition Selection (IPI/CPI)

This system has the option of a continuous (standing) pilot. This features allows the system to change from a spark-to-pilot system to the standing pilot option. The standing pilot will keep the firebox warm and establish a draft in the vent, which allows the main burner to ignite with less air-flow disruption.

When the system is OFF, the LCD screen will display the snowflake icon during the setup of either IPI or CPI mode. To select the preferred pilot ignition feature,

1. With the system in the OFF position, press the mode key to index the CPI mode icon.
2. Press the up arrow key to activate CPI.
3. Press the down arrow key to return to IPI. A single 'beep' will confirm reception of the command.

When the system is ON,

IPI mode: LCD screen will not display the snowflake icon

CPI mode: LCD screen will display the snowflake icon

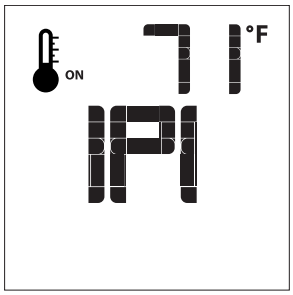

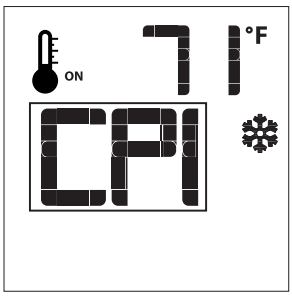

10.8.4 Turn ON the Appliance

1. With the system in the OFF position, press the remote control ON/OFF key to turn ON the appliance.
   A single 'beep' will emit from the IFC module to confirm reception of the command.

The LCD screen will display all active icons, and the IFC module will start the ignition sequence.

10.8.5 Turn OFF the appliance

1. With the system in the OFF position, press the remote control ON/OFF key to turn ON the appliance.
   A single 'beep' will emit from the IFC module to confirm reception of the command.

The LCD screen will only display the room temperature and its icon, and the IFC module will turn off the main burner.

10.8.6 Remote Control Flame Adjustment

This control system has (6) flame levels. If the smart thermostat operation is activated, then the manual adjustment of the flame height will be disabled.

1. Verify the system is in the ON position and the flame level is set at maximum.
2. Press the down arrow key once to reduce flame height by one level until the flame is turned off.
3. Press the up arrow key once to increase flame height by one step. If the up arrow key is pressed while the system is on, but the flame is off, the flame will ignite on HI.
4. A single 'beep' will confirm reception of the command.

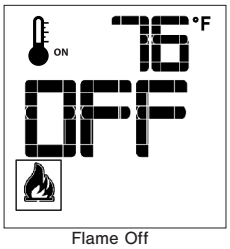

Flame Off

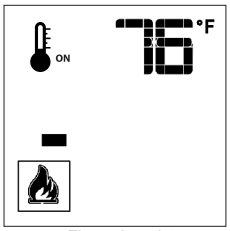

Flame Level 1

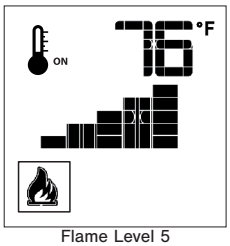

Flame Level 5

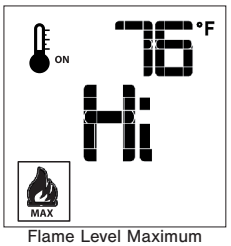

Flame Level Maximum

10.8.6.1 Deactivate Flame Modulation

1. Verify all (3) AAA batteries are installed in the remote control battery bay.
2. Remove (1) AAA battery.
3. Press and hold the on/off key and the mode key at the same time.
4. Reinsert (1) AAA battery.
5. While still holding the on/off key, let go of **ONLY** the mode key.
6. Index over to the flame graphic on the LCD screen to edit. Use the up or down arrow key to choose 'ON' or 'OFF'.

10.8.7 Remote Control Thermostat Operation

10.8.7.1 Room Thermostat

The remote control can operate as a room thermostat. The thermostat can be set to a desired temperature to control a room's comfort level. To activate this function,

1. Press the thermostat key. The LCD screen will display a temperature bulb graphic, the room temperature and set temperature.
2. To adjust the set temperature, press the up or down arrow keys until the desired temperature is displayed on the LCD screen.

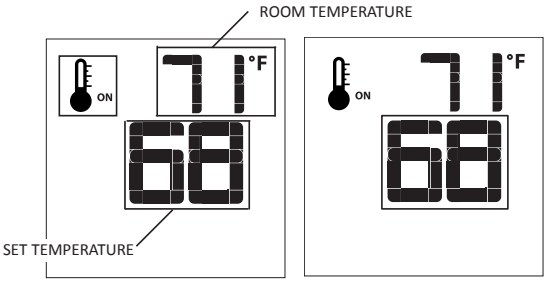

10.8.7.2 Smart Thermostat

The smart thermostat function will adjust the flame height based on the set temperature and the actual room temperature. The smart thermostat function automatically adjusts the flame down when the room temperature reaches the set point. To activate this function,

1. Press the thermostat key until the 'SMART' appears on LCD screen on the right side of the temperature bulb graphic.
2. To adjust the set temperature, press the up or down arrow keys until the desired temperature is displayed on the LCD screen.

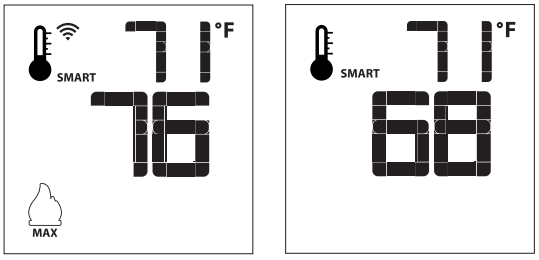

10.8.7.3 Deactivate Remote Control Thermostat Operation

The thermostat operation function can be deactivated. The remote control will still operate the main burner on and off, and function flame, fan, and light modulation. To deactivate this function,

1. Verify all (3) AAA batteries are installed in the remote control.
2. Remove (1) AAA battery.

3. While reinserting the battery, push and hold the thermostat key. The temperature bulb graphic will not be displayed on the LCD screen.
4. To reactivate remote thermostat operation, follow the same key sequence procedure above. The temperature bulb graphic will reappear on the LCD screen.

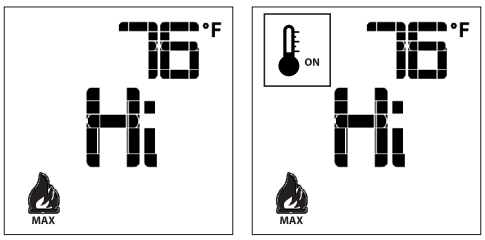

10.8.8 Fan Speed Control (optional)

Fan speed can be adjusted through (6) speeds. To activate this function,

1. Press the mode key to index to the fan control icon.
2. Press the up or down arrow keys to turn on, off, or to adjust fan speed.

Thermostat mode: Fan(s) have a (5) minute delay time when the fireplace is let. This allows time for heat to build in fireplace before fan operation. The fan will continue to operate for approximately (12) minutes after the fireplace has been turned off.

Manual mode: Fan(s) will operate at previous setting. There is no delay in start up or stop time.

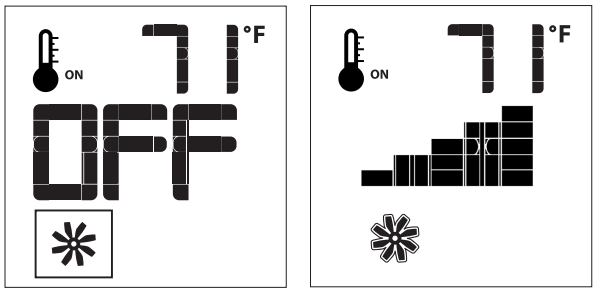

10.8.9 Accent Light Kit (if applicable)

The light intensity can be adjusted through (6) levels.

1. Press the mode key to index to the light icon.
2. Press the up or down arrow keys to adjust the intensity level.
3. A single 'beep' will confirm reception of the command.

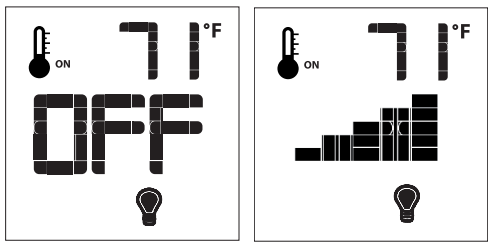

10.8.9.1 Deactivate Light Kit Modulation

1. Verify all (3) AAA batteries are installed in the remote control battery bay.
2. Remove (1) AAA battery.
3. Press and hold the on/off key and the mode key at the same time.
4. Reinsert (1) AAA battery.
5. While still holding the on/off key, let go of **ONLY** the mode key.
6. Index over to the bulb graphic on the LCD screen to edit. Use the up or down arrow key to choose 'SET' or 'CLR'.

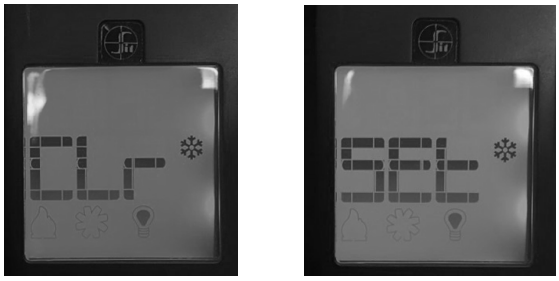

10.8.10 Remote Control Low Battery Detection

Remote control battery lifespan depends on various factors including battery quality, number of ignitions, changes to room thermostat set point, etcetera.

- When the remote control battery are low, a battery icon will appear on the LCD display before all battery power is lost.
- When the batteries are replaced, this icon will disappear.

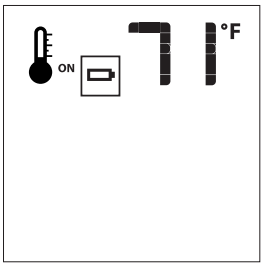

11.0 ADJUSTMENT

11.1 Pressure Testing

NOTE: The appliance and its appliance main gas valve must be disconnected from the gas supply piping system during any pressure testing of the system at test pressures in excess of ½ psi (3.5 kPa).

IMPORTANT: Pressure check taps for manifold (outgoing) and inlet (incoming) pressure have been incorporated into the valve. The pressure tap marked OUT measures outgoing pressure. The pressure tap marked IN measures incoming pressure.

11.1.1 Inlet Pressure Test

NOTE: Make sure to apply incoming pressure test with all other gas appliances on, or at full capacity in the house for proper pressure reading.

IMPORTANT: If the inlet pressure reading is too high or too low, contact the gas company. Only a qualified gas service technician should adjust incoming gas pressure.

1. Loosen the inlet (IN) pressure tap by turning screw counter-clockwise. See (A) in Figure 11.1.
2. Attach manometer using a ¼ in (6 mm) I.D. hose.
3. Light pilot and burner. Check pressure to ensure it is between the minimum and maximum recommended pressure settings.
4. Turn off burner and pilot.
5. Disconnect hose and tighten the inlet (IN) pressure tap by turning screw clockwise. Screw should be snug. Do not over tighten.
6. Relight pilot and burner. Then reattach manometer to the inlet pressure tap (A) to verify the tap is completely sealed. Manometer should read no pressure.

11.1.2 Manifold Pressure Test

1. Light pilot.
2. Loosen manifold (OUT) pressure tap by turning screw counter-clockwise. See (B) in Figure 11.1.
3. Attach manometer to pressure tap using a ¼ in (6 mm) I.D. hose.
4. Light burner. Check manometer reading.
5. Turn burner and pilot off.
6. Disconnect manometer hose and tighten the manifold (OUT) pressure tap by turning screw clockwise. Screw should be snug. Do not over tighten.
7. Attach the manometer to the manifold pressure tap (B) to verify it is completely sealed. The manometer should read no pressure when pilot and burner are on.

Table 11.1, Inlet Pressures

Fuel	Natural Gas	Propane
Gas Supply	Min - Max	Min - Max
Inlet Pressure Tap (A)	5″ - 10.5″WC (1.25 - 2.62 kPa)	12″ - 13″WC (2.99 - 3.24 kPa)

Table 11.2, Manifold Pressure

Fuel	Natural Gas	Propane
Gas Supply	Low - High	Low - High
Manifold Pressure Tap (B)	1.1″ - 3.8″WC (.27 - .95 kPa)	2.9″ - 11″WC (.72 - 2.74 kPa)

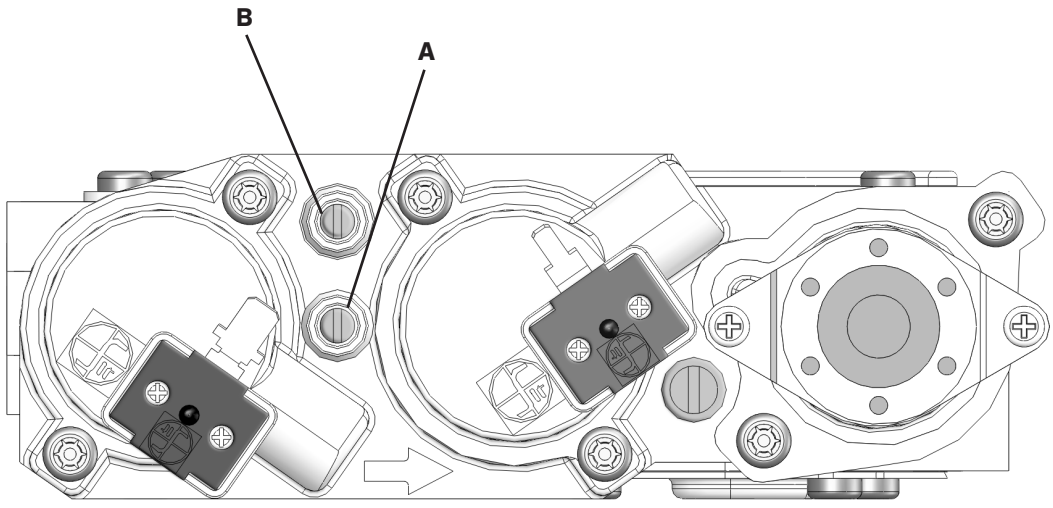

Figure 11.1, Pressure Check Taps

11.2 Flame Appearance Adjustments

WARNING: To avoid property damage or personal injury, allow the fireplace ample time to cool before making any adjustments.

Burner flame appearance and characteristics are affected by altitude, fuel quality, venting configuration, and other factors. After installation, this appliance may need additional adjustments to achieve optimum flame appearance and visual aesthetics.

11.2.1 Burner Venturi

WARNING: VENTURI ADJUSTMENT MUST BE DONE BY A QUALIFIED SERVICE TECHNICIAN.

NOTE: Burner venturi air shutter settings have been factory set. Refer to Table 11.3.

When this appliance is first lit, the burner flames will appear blue. During the first 15 minutes of operation, flame appearance will gradually turn to the desired yellow appearance. If the flames remain blue, or become dark orange with evidence of sooting (black tips), adjustment of the air shutter opening may be necessary.

Regardless of venturi orientation, closing the air shutter will achieve a desired yellow flame, but may produce soot on the glass. Opening the air shutter will cause a short, blue flame that may lift off the burner.

Table 11.3, Factory Set Venturi Openings

Fuel	Air Shutter Opening
Natural Gas	1/8 in (3 mm)
Propane	5/8 in (16 mm)

11.2.1.1 Venturi Adjustment

NOTE: If soot is present on the glass, check log positioning before adjusting the venturi. Logs must not block burner ports.

1. Remove the safety barrier, glass frame assembly, and log set.
2. Remove burner assembly.
3. Loosen screw on burner venturi and adjust as necessary. Re-tighten screw.
4. Reinstall all components previously removed.

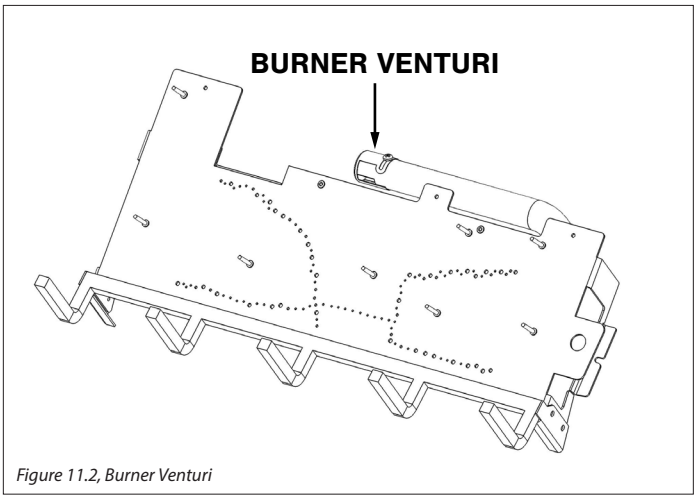

Figure 11.2, Burner Venturi

IMPORTANT: Slight adjustments to the venturi opening will create dramatic results. Adjust at slight increments until desired look is achieved. Always burn the fireplace for at least 15 minutes, and always allow the appliance ample time to cool before making any further adjustments.

Table 11.4, Venturi Adjustment Guidelines

Flame Characteristic	Cause	Solution
Dark, orange flame with black tips	Venturi closed too far	Open venturi slightly
Short, blue flames	Venturi open too far	Close setting slightly
Lifting (ghosting) flames	Gas pressure too high Venturi closed too far	Check manometer settings Open venturi setting slightly

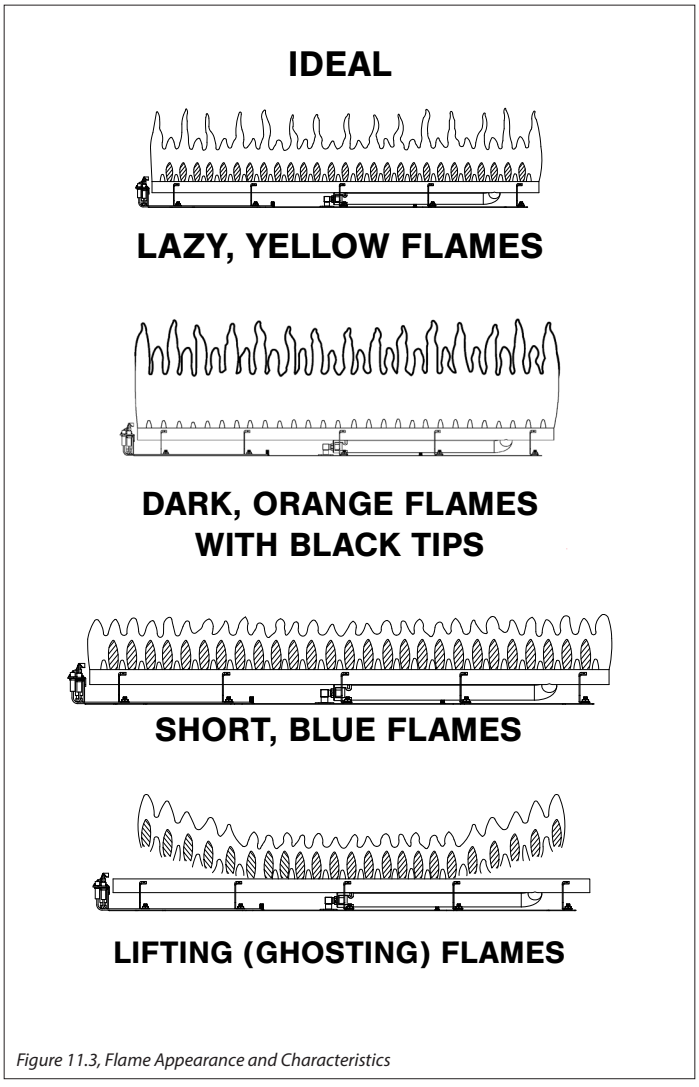

Figure 11.3, Flame Appearance and Characteristics

11.2.2 Restrictor

WARNING: To avoid property damage or personal injury, allow the fireplace ample time to cool before making any adjustments.

WARNING: Improper vent installation may cause the burner flames to lift or "ghost." Perform a visual check on flame appearance after restrictor adjustment to ensure proper performance.

Vertical terminations may display an active, compact flame. If this appearance is not desirable, a restrictor may need to be installed or modified after vent termination installation. Access to the vent exit for restriction can be reached through the fireplace baffle. Allow the fireplace to burn for 15 minutes before making any adjustments.

Table 11.5, Restrictor Adjustment Guidelines

Flame Appearance	Draft Problem	Solution
Short, flickering	Excessive draft Not enough restriction	Add restrictor
Lifting or ghosting*	Insufficient draft	Remove inner ring(s) on restrictor, or Remove restrictor

*If flames continue to lift or ghost after opening the restrictor and verifying correct vent installation, shut off the gas supply and call a qualified service technician.

11.2.2.1 Restrictor Installation

1. Remove the safety barrier and glass frame assembly.
2. Remove refractory (if installed) and log set.
3. Remove (2) screws securing termination access panel, located on the fireplace baffle.
4. Bend the tabs on the restrictor (included in fireplace components packet) to approximately 80° angles. This will create tension when the restrictor is inserted into the exhaust pipe.
5. Insert restrictor into the 4 in (102 mm) exhaust pipe with the tabs pointing towards you.
6. Reinstall termination access panel. Insert the panel tabs into the slots in the fireplace baffle. Secure with (2) screws previously removed.
7. Reinstall all components previously removed.

11.2.2.2 Restrictor Modification

1. Remove the safety barrier and glass frame assembly.
2. Remove refractory (if installed) and log set.
3. Remove (2) screws securing termination access panel, located on the fireplace baffle.
4. Remove the restrictor from the 4 in (102 mm) exhaust pipe by pulling the restrictor down and out.
5. Make necessary modifications to achieve desired flame appearance.
6. Insert restrictor into the 4 in (102 mm) exhaust pipe with the tabs pointing towards you.
7. Reinstall termination access panel. Insert the panel tabs into the slots in the fireplace baffle. Secure with (2) screws previously removed.
8. Reinstall all components previously removed.

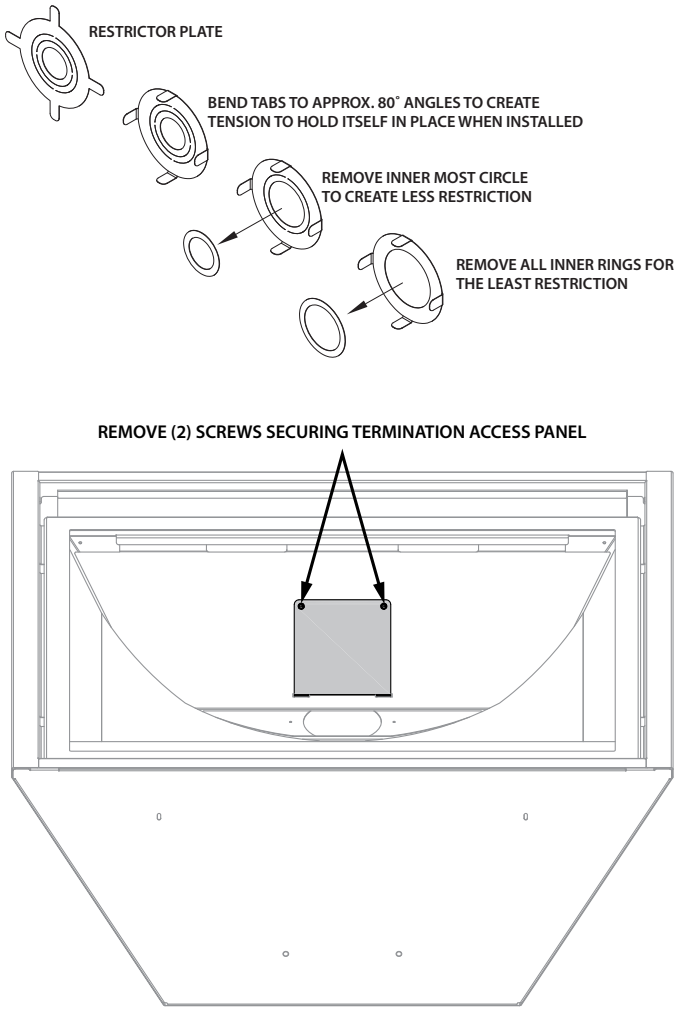

Figure 11.4, Restrictor Installation and Modification

12.0 TROUBLESHOOTING

ATTENTION: Troubleshooting must be performed by a qualified technician.

Before proceeding with the steps in the following troubleshooting guide,

- Verify proper 120VAC power supply to the control module.
- Verify the control module battery pack and the remote control batteries are fresh and installed with correct polarity.
- Verify all connections between the wire harnesses and the system components are proper and positive.
- Verify the communication link is established between the remote control and the IFC module.
- Verify inlet pressure meets the recommended inlet pressure. If necessary, adjust line pressure regulator.

Issue	Cause	Solution
Pilot will not light	Electrical power interrupted or disconnected	Restore electrical power to appliance or use battery back-up.
	Wiring disconnection	Ensure batteries are fully charged if using battery back-up as power source. Use wiring schematic in this manual to determine that all wiring connections are secure and correct.
	Gas supply turned off	Check remote shut-off valves from the appliance. Usually there is a valve near the main gas line. There may be more than (1) valve between the appliance and main gas line.
Pilot will not stay lit	No propane in tank	Check propane tank. Refill if necessary.
	Low gas pressure	Consult a plumber or a gas supplier. Can be caused by situations such as a bent line, too narrow diameter or pipe, or a low line pressure.
	Pilot flame not making contact with the flame rectification sensor on the pilot assembly	Verify the pilot flame envelopes the top of the flame sensor and extends far enough onto burner for ignition. To adjust pilot flame, turn pilot adjustment screw on the gas valve clockwise to decrease flame, and counterclockwise to increase flame.
	Pilot adjustment screw not sealed	Seal pilot adjustment screw. Do not over-tighten.
Pilot flame always on, or will not extinguish	Control system set to CPI mode	Set control system to IPI mode.
Main burner flame will not light	ON/OFF rocker switch in OFF position	Switch rocker switch to ON position.
	Gas supply turned off	Check for multiple shut-offs in the supply line. Verify gas supply is turned on.
	Low gas supply	Consult with plumber or gas supplier. Check propane tank. Refill if necessary.
	Wiring disconnection or improper wiring	Check for faulty or incorrect wiring.
	Plugged main burner orifice	Remove blockage.
	Pilot flame	Verify the pilot flame is properly directed to ignite burner. See pilot flame troubleshooting above.
	Remote control not working properly	Replace batteries.
	No call for heat	Verify remote control is powered ON and thermostat operation is turned OFF.

Issue	Cause	Solution
Pilot and burner extinguish while in operation	No propane in tank	Check propane tank. Refill if necessary.
	Incorrect glass assembly installation	Section 8.1 Glass Frame Assembly on page 33.
	Incorrect vent cap installation	Adjust if necessary.
	Vent cap blockage	Remove debris if necessary.
	Improper pitch on horizontal venting	¼ in. (6 mm) rise per foot (30 cm) is required on horizontal venting
	Inner vent pipe leaking exhaust gases back into firebox	Check for leaks and repair if necessary.
	Excessive draft	Restrictor setting may need to be adjusted. Section 11.2.2 Restrictor on page 46.
Soot appears on glass	Improper log placement	Section 8.4 #B41-500 Log Set Installation on page 34.
	Improper venturi setting	Venturi air shutter may need to be opened slightly to allow more air into the gas mix. Section 11.2.1 Burner Venturi on page 45.
	Incorrect vent cap installation	Adjust if necessary.
	Vent cap blockage	Remove debris if necessary.
	Improper pitch on horizontal venting	¼ in. (6 mm) rise per foot (30 cm) is required on horizontal venting
Flame burns blue and lifts off burner	Improper venturi setting	Venturi air shutter may need to be opened slightly to allow more air into the gas mix. Section 11.2.1 Burner Venturi on page 45.
	Incorrect vent cap installation	Adjust if necessary.
	Blockage or leakage of the vent system	Check the vent pipes for leaks, and the vent cap for debris. Repair the vent pipes or remove debris from vent cap, if necessary.
No reaction to command	Battery back batteries or remote control batteries low	Replace batteries.
	No communication between remote control and IFC module	Reprogram remote control to IFC module.
	A maximum number of failed ignitions or flame restorations has been reached	Reset IFC module.

13.0 MAINTENANCE

ATTENTION: Installation and repair should only done by a qualified service person. The appliance should be inspected before use and at least annually by a professional service person. More frequent cleaning might be required due to excessive lint from carpeting, bedding material, et cetera. It is imperative that control compartments, burners, and circulating air passageways of the appliance be kept clean. Use a vacuum to clean all components.

WARNING: The appliance area must be kept clear and free from combustible materials, gasoline and other flammable vapors and liquids.

13.1 Firebox

Performed by: Qualified Service Person

Frequency: Annually

Action:

- Vacuum and clean any debris in the firebox that is not supposed to be there.
- Inspect and operate the bottom latch assembly. Verify the assembly is free from obstruction to operate. The handles must have spring tension but be able to move forward freely.

13.2 Fan

CAUTION: Label all wires prior to disconnection when servicing controls. Wiring errors can cause improper and dangerous operation. Verify proper operation after servicing.

Performed by: Qualified Service Person

Frequency: Every 6 months

Action:

- Disconnect the fan from electrical current and vacuum.
- The bearings are sealed and require no oiling.

13.3 Vent System

NOTE: If the vent-air intake system is disassembled for any reason, reinstall per instructions provided with installation. Refer to Section 7.0 Venting on page 27.

Performed by: Qualified Service Person

Frequency: Annually

Action:

- Examination of the vent system is required.
- The flow of combustion and ventilation air must not be obstructed.

13.4 Glass Assembly

CAUTION: Do not operate appliance with the glass assembly removed, cracked, or broken. Use protective gloves to handle any broken or damaged glass assembly components.

WARNING: Do not use substitute materials.

WARNING: Avoid striking or slamming glass assembly. Avoid abrasive cleaner. DO NOT clean glass while it is hot.

IMPORTANT: Any safety screen, guard, or barrier removed for servicing the appliance must be replaced prior to operating the appliance.

Performed by: Homeowner

Frequency: Annually

Action:

- Prepare a work area large enough to accommodate the glass assembly on a flat, stable surface.
- Remove safety screen and glass frame assembly.
- Clean glass window with a suitable fireplace glass cleaner using a soft cloth. Abrasive cleaners must not be used. Be careful not to scratch the glass when cleaning.
- Reinstall glass assembly and safety screen. Do not operate fireplace without safety screen.

Performed by: Qualified Service Person

Frequency: Annually

Action:

- Clean glass window with a suitable fireplace glass cleaner using a soft cloth. Abrasive cleaners must not be used. Be careful not to scratch the glass when cleaning.
- Inspect the glass for cracks, scratches, and nicks.
- Verify the glass assembly is properly intact and not damaged.
- Replace the glass and the assembly #B41-057T as necessary.
- Only Hussong Mfg. Co., Inc. will supply the replacement of glass assembly as a complete unit.

13.5 Burner and Pilot System

The burner assembly may be removed for easier access to the control compartment. Refer to Section 9.4 Control Board Removal and Installation on page 46 for instructions. Verify gas supply is turned on and filled. Consult with plumber or gas supplier as necessary.

Performed by: Qualified Service Person

Frequency: Annually

Action:

- Vacuum all components of the burner system.
- Check all accessible gas-carrying tubes, connections, pipes and other components for leaks.
- Inspect the operation of the flame safety system Pilot or Flame rectification device. Visually check pilot light when in operation.
- Inspect and ensure the lighting of the main burner occurs within (4) seconds of the main gas valve opening. Check for faulty or incorrect wiring and correct or replace as necessary. Inspect primary air openings (burner ports) for blockage, especially near the pilot.
- Visually check burner flame pattern when in operation. Flames should be steady, not lifting or floating.
- Test and measure the flame failure response time of the flame safety system. It must de-energize the safety shutoff in no more than (30) seconds.

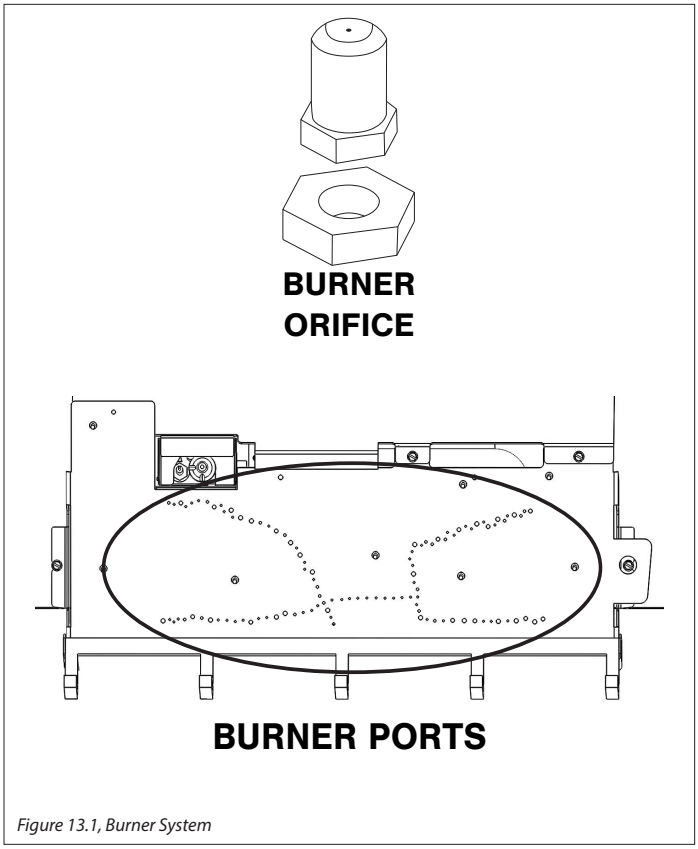

Figure 13.1, Burner System

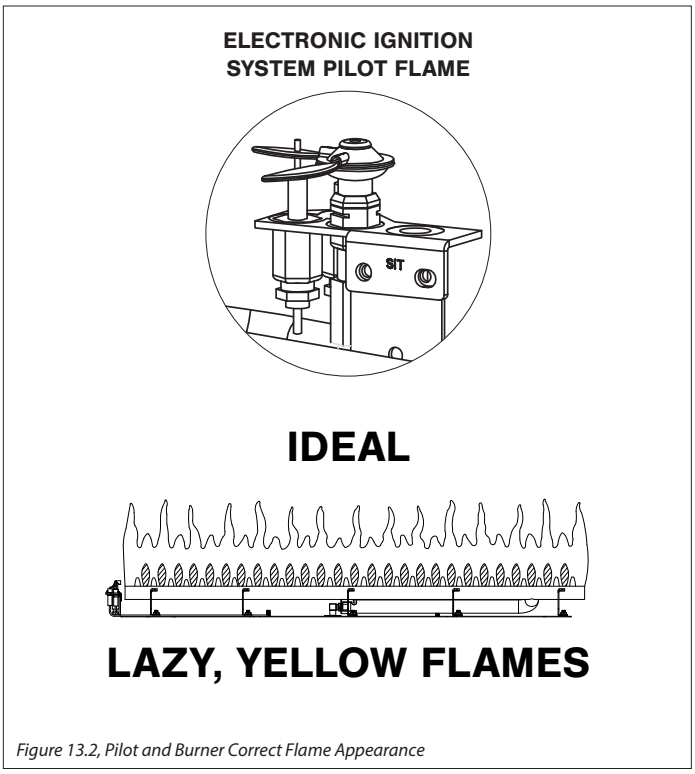

Figure 13.2, Pilot and Burner Correct Flame Appearance

14.0 REPLACEMENT PARTS LIST

Replacement parts are available through your local dealer. Contact your local dealer for availability and pricing.

The following warning is for replacement parts for this appliance.

WARNING: This product can expose you to chemicals including Lead, which is [are] known to the State of California to cause cancer, birth defects, or other reproductive harm. For more information, visit www.P65Warnings.ca.gov.

CONTROL BOARD AND PARTS			
Control Board - NG	B41L-150A	Pilot Orifice - Propane #35	700-168
Control Board - Propane	B41L-151A	Valve Step Motor - NG	700-504
S.I.T. IPI Gas Valve - NG	700-567	Valve Step Motor - Propane	700-504-1
S.I.T. IPI Gas Valve - Propane	700-567-1	18 in. Flexible Gas Line - Black	700-213B
Proflame 2 IFC Board	700-652	Flexible Gas Line - Valve to Burner Connection	700-226F
IFC Wire Harness Assembly	700-653	NG Burner Orifice #41	700-241
Pilot Assembly - NG	700-551	Propane Burner Orifice #.0625	700-625
Pilot Assembly - Propane	700-551-1	Conversion Kit - NG	NCK-B41L-SB
Transmitter (Remote Control)	700-408	Conversion Kit - Propane	LCK-B41L-SB
Pilot Orifice - NG #62	700-166	Burner Assembly	B41L-135A

GLASS AND GLASS GASKET	
36½" x 28⅞" Glass with Gasket	700-179T
1⅛" Glass Gasket with Adhesive	900-006
Replacement Valance	B41-005

LIGHT KIT	
Light Kit	B410LKT
20W 130V Halogen Bulb	600-676
1-1/2 lb of Crushed Glass	600-697

SAFETY BARRIERS	
Full Rectangular Screen Front	B41-FRSF2
Prairie Screen Front	B41-PSF2
Rectangle Screen Front	B41-RSF2
Arched Mission Screen Front	B41A-MSF2
Arched Full Prairie Door Screen Front	B41A-FPDSF2
Rectangular Mission Screen Front	B41R-MSF2
Portrait Screen Front	B41-PTF2

TRADITIONAL LOG SET	
8 Piece Log Set	B41-500
Ember panel	B41-900E
#BP1 Log	B41L-1
#BP2 Log	B41L-2
#BP3 Log	B41L-3
#BP4 Log	B41L-4
#BP5 Log	B41L-5
#BP6 Log	B41L-6
#BP7 Log	B41L-7
#BP8 Log	B41L-8
Rock Wool Embers	900-REMB

ADDITIONAL COMPONENTS	
4 in Restrictor Plate	900-085
Manual Gas Shut-off Valve	700-203
Bottom Frame	B41-201B

FAN KIT	
Fan Kit	IPI-028

BIRCHWOOD LOG SET	
8 Piece Log Set	B41-B501
Ember panel	B41-900E
#1 Log	B41B-1
#2 Log	B41B-2
#3 Log	B41B-3
#4 Log	B41B-4
#5 Log	B41B-5
#6 Log	B41B-6
#7 Log	B41B-7
#8 Log	B41B-8
Rock Wool Embers	900-REMB

Hussong Manufacturing Co., Inc.
P.O. Box 577
204 Industrial Park Drive
Lakefield, MN 56150-0577
USA
BAY-41-L

LIMITED LIFETIME WARRANTY

Warranty Coverage

Hussong Manufacturing Company, Inc. (Hussong Mfg.) warrants this Kozy Heat gas appliance from the date of purchase to the original purchaser, that it is free of defects in materials and workmanship at the time of manufacture. Registering your fireplace warranty does not require any documents to be sent in to Hussong Mfg. Please retain your proof of purchase reflecting the date of purchase along with the serial number and model of your fireplace for any future warranty claims.

If a defect is noted within the warranty period, the customer should contact their authorized dealer for service within 30 days.

30 Days: Parts & Labor*

- Paint
- Light bulbs
- Gasket material
- Glass media and media dam

Year 1: Parts & Labor*

- All parts and material except the items listed in the 30 day warranty and any exclusions or limitations that may apply.

Hussong Mfg. will issue labor reimbursement to an authorized dealer only. Hussong Mfg. will not be liable for charges occurred as a result of any service performed by a non-authorized service provider, without pre-authorization.

Years 2 through Lifetime: Parts Only

- Firebox
- Heat Exchanger
- Logs
- Burner tube or pan
- Outer shell
- Heat shield(s)
- Front Viewing Glass (thermal shock only)
- Refractory Firebox liner (excluding enamel and glass panels)

EXCLUSIONS AND LIMITATIONS

1. This appliance must be installed by a licensed, authorized service technician or contractor. It must be installed, operated and maintained at all times in accordance with the instructions in the owner's manual or the warranty is void.
2. This warranty is nontransferable and is made to the original purchaser only.
3. This warranty excludes standard wear and tear of the appliance which is considered normal usage over time.
4. Discoloration and some minor expansion, contraction or movement of certain parts, resulting in noise, is normal and not a defect.
5. Warranty is automatically voided if the appliance's serial number and/or testing label is removed or if the appliance is altered or tampered with in any way.
6. Warranty is void if the appliance is subject to submersion in water or prolonged periods of dampness or condensation. Any damage to any part of the appliance due to water or weather damage which is the result of, but not limited to, improper chimney/venting installation will also render this warranty void.
7. This warranty does not cover installation and operational related problems such as environmental conditions, nearby trees, buildings, hilltops, mountains, inadequate venting or ventilation, excessive offsets, negative air pressures caused by any mechanical systems.
8. Chimney components and other Non-Hussong Mfg. accessories used in conjunction with the installation of this appliance are not covered under this warranty.
9. Damage to plated surfaces or accessories, if applicable, caused by scratches, fingerprints, melted items or other external sources left on the surfaces from the use of cleaners is not covered under this warranty.
10. It is expressly agreed and understood that this warranty is Hussong Mfg.'s sole obligation and purchaser's exclusive remedy for defective fireplace equipment. Hussong Mfg. is free of liability for any damages caused by this appliance, as well as inconvenience expenses and materials. Incidental or consequential damages are not covered by this warranty. In some states, the exclusion of incidental or consequential damage may not apply. Hussong Mfg. shall not be held to implied warranties and this warranty shall replace all previous warranties.
11. This limited lifetime warranty is the only warranty supplied by Hussong Mfg. Any warranties extended to the purchaser by the dealer/distributor, whether expressed or implied, are hereby disclaimed and the purchaser's recourse is expressly limited to the warranties set forth herein.
12. Any part repaired or replaced during the limited warranty period will be warranted under the terms of the limited warranty for a period not to exceed the remaining term of the original limited warranty.
13. Any replacement part repaired after the warranty period will include a 90 day parts coverage
14. Hussong Mfg. may require the defective part to be returned using a pre-authorized RGA number or a photo of the defective component. Failure to provide either can result in a denied claim.
15. This warranty does not cover the appliances ability to heat a desired space, as there are many factors that can impact the heating performance in each home. Consideration should be implied to the appliance's location, room size, home design, environmental conditions, insulation, and tightness of the home.
16. Hussong Mfg. reserves the right to make changes at any time, without notice, in design, material, specifications, and prices. Hussong Mfg. reserves the right to discontinue models and products.

July 2018