KOZY HEAT
FIREPLACES

MODEL: #56101 'WINDOM'

DIRECT VENT GAS FIREPLACE

INSTALLATION AND OPERATING MANUAL

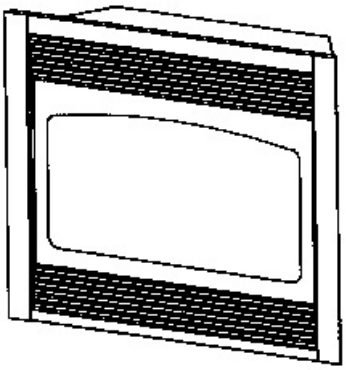

WARNING: If the information in these instructions is not followed exactly, a fire or explosion may result, causing property damage, personal injury or loss of life.

- **Do not store or use gasoline or other flammable vapors and liquids in the vicinity of this or any other appliance.**

WHAT TO DO IF YOU SMELL GAS:

- **Do not try to light any appliance.**
- **Do not touch electrical switches; do not use the phone in your building.**
- **Immediately call your gas supplier from a neighbor's phone. Follow your gas supplier's instructions.**
- **If you cannot reach your gas supplier, call the fire department.**

Installation & service must be performed by a qualified installer, service agency, or the gas supplier.

This appliance may be installed in an aftermarket permanently located, manufactured (mobile) home, where not prohibited by local codes. This appliance is only for use with the type(s) of gas indicated on the rating plate. This appliance is not convertible for use with other gases, unless a certified kit is used.

US Patent Number 5,931,154
US Patent Number 6,004,493

IMPORTANT:
READ INSTRUCTIONS CAREFULLY BEFORE INSTALLATION. FAILURE TO INSTALL THIS FIREPLACE CORRECTLY CAN CAUSE SERIOUS STRUCTURAL AND FIRE HAZARDS AND MAY VOID YOUR WARRANTY.

Tested & Listed By O-TL Beaverton Oregon USA
C US
OMNI-Test Laboratories, Inc.

www.kozyheat.com

January 2008

COMMONWEALTH OF MASSACHUSETTS

NOTE: The following requirements reference various Massachusetts and national codes not contained in this document.

REQUIREMENTS FOR THE COMMONWEALTH OF MASSACHUSETTS

For all side wall horizontally vented gas fueled equipment installed in every dwelling, building or structure used in whole or in part for residential purposes, including those owned or operated by the Commonwealth and where the side wall exhaust vent termination is less than seven (7) feet above finished grade in the area of the venting, including but not limited to decks and porches, the following requirements shall be satisfied:

INSTALLATION OF CARBON MONOXIDE DETECTORS

At the time of installation of the side wall horizontal vented gas fueled equipment, the installing plumber or gas fitter shall observe that a hard wired carbon monoxide detector with an alarm and battery bak-up is installed on the floor where the gas equipment is to be installed. In addition, the installing plumber or gas fitter shall observe that a battery operated or hard wired carbon monoxide detector with an alarm is installed on each additional level of the dwelling, building or structure served by the side wall horizontally vented gas fueled equipment. It shall be the responsibility of the property owner to secure the services of qualified licensed professionals for the installation of hard wired carbon monoxide detectors.

In the event that the side wall horizontally vented gas fueled equipment is installed a crawl space or an attic, the hard wired carbon monoxide detector with alarm and battery back-up may be installed on the next adjacent floor level.

In the event that the requirements of the subdivision can not be met at the time of installation, the owner shall have a period of thirty (30) days to comply with the above requirements; provided, however, that during said thirty (30) day period, a battery operated carbon monoxide detector with an alarm shall be installed.

APPROVED CARBON MONOXIDE DETECTORS
Each carbon monoxide detector as required in accordance with the above provisions shall comply with NFPA 720 and be ANSI/UL 2034 listed and IAS certified.

SIGNAGE

A metal or plastic identification plate shall be permanently mounted to the exterior of the building at a minimum height of eight (8) feet above grade directly in line with the exhaust vent terminal for the horizontally vented gas fueled heating appliance or equipment. The sign shall read, in print size no less than (½) inch in size, **"GAS VENT DIRECTLY BELOW. KEEP CLEAR OF ALL OBSTRUCTIONS".**

INSPECTION

The state of local gas inspector of the side wall horizontally vented gas fueled equipment shall not approve the installation unless, upon inspection, the inspector observes carbon monoxide detectors and signage installed in accordance with the provisions of 248 CMR 5.08 (2) (a) 1 through 4.

EXEMPTIONS

The following equipment is exempt from 248 CMR 5.08 (2) (a) 1 through 4.

- The equipment listed in Chapter 10 entitled "Equipment Not Required To Be Vented" in the most current edition of NFPA 54 as adopted by the Board; and
- Product Approved side wall horizontally vented gas fueled equipment installed in a room or structure separated from the dwelling, building or structure used in whole or in part for residential purposes.

MANUFACTURER REQUIREMENTS

GAS EQUIPMENT VENTING SYSTEM PROVIDED

When the manufacturer of Product Approved side wall horizontally vented gas equipment provides a venting system design or venting system components with the equipment, the instructions provided by the manufacturer for installation of the equipment and the venting system shall include:

- Detailed instructions for the installation of the venting system design or the venting system components; and
- A complete parts list for the venting system design or venting system.

GAS EQUIPMENT VENTING NOT PROVIDED

When the manufacturer of a Product Approved side wall horizontally vented gas fueled equipment does not provide the parts for venting the flue gases, but identifies "special venting systems", the following requirements shall be satisfied by the manufacturer:

- The referenced "special venting system" instructions shall be included with the appliance or equipment installation instructions; and
- The "special venting systems" shall be Product Approved by the Board, and the instructions for that system shall include a parts list and detailed installation instructions.

A copy of all installation instructions for all Product Approved side wall horizontally vented gas fueled equipment, all venting instructions, all parts lists for venting instructions, and/or all venting design instructions shall remain with the appliance or equipment at the completion of the installation.

- Installation and repair must be done by a plumber or gas fitter licensed in the Commonwealth of Massachusetts.
- The flexible gas line connector used shall not exceed 36 inches (92 centimeters) in length.
- The individual manual shut-off must be a T-handle type

INDEX

IMPORTANT:

READ THIS MANUAL BEFORE INSTALLING AND USING THIS FIREPLACE

MODEL #56101 'WINDOM' DIRECT VENT GAS FIREPLACE

This fireplace has been tested to and complies with ANSI Z21.88a-2007 •CSA 2.33a-2007 "VENTED GAS FIREPLACE HEATERS" by OMNI-Test Laboratories, Beaverton, OR. Installation must conform with local building codes or in the absence of local building codes, with the National Fuel Gas Code, ANSI Z223.1, NFPA 54 - Current Edition.

SPECIFICATIONS	
Height (front):	32"
Height (back):	30 1/8"
Front width:	36"
Back width:	23 3/8"
Depth:	11"
Flue size:	4" exhaust, 6 5/8" combustion air intake

PASS-THRU WALL THICKNESS: The Dura-Vent DV-GS 4" x 6 5/8" wall thimble, (Dura-Vent Part #942 / Kozy Heat Part #D942) is designed for a minimum wall thickness of 4" and maximum wall thickness of 7 ½". The Ameri-Vent wall thimble, (part #4DWT), is designed for a minimum wall thickness of 4 ½" and maximum wall thickness of 8 1/2".

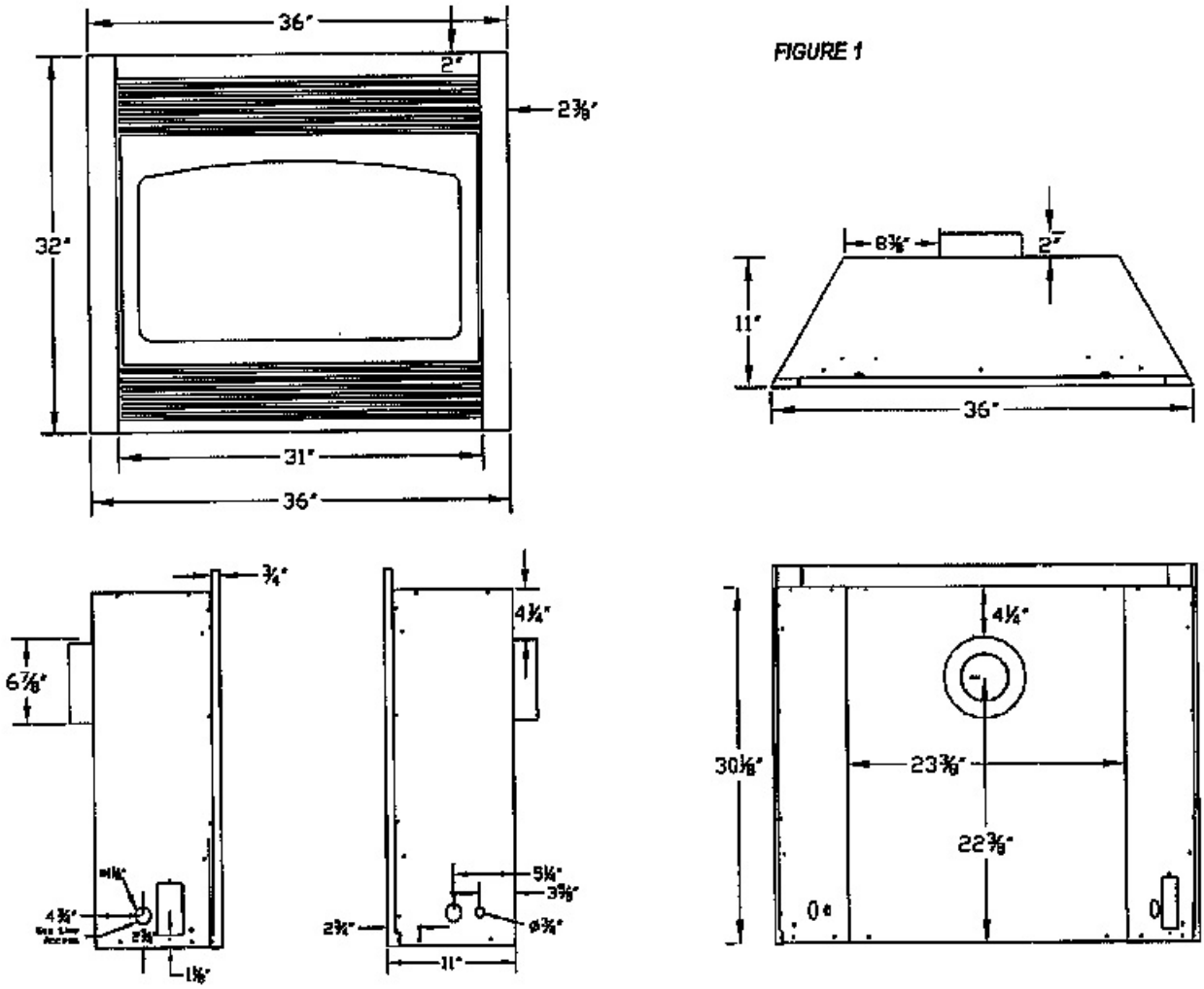

WARNING: This Product Must Be Installed By A Licensed Plumber Or Gas Fitter When Installed Within The Commonwealth of Massachusetts.

WARNING: Do not use this fireplace if any part has been under water. Immediately call a qualified service technician to inspect this appliance and to replace any part of the control system and any gas control which has been under water.

CONSULT YOUR LOCAL OR NATIONAL INSTALLATION CODES TO ASSURE THAT ADEQUATE COMBUSTION AND VENTILATION AIR IS AVAILABLE.

WARNING:
DO NOT REPLACE THIS BURNER UNIT WITH ANY OTHER SIZED BURNER. REPLACEMENT WITH AN UNAUTHORIZED BURNER CAN RESULT IN TEMPERATURES EXCEEDING THE LIMITS FOR THIS UNIT, AND VOID YOUR WARRANTY.

IMPORTANT: NON-COMBUSTIBLE FACING MATERIAL MAY BE APPLIED OVER THE FACE. TO PREVENT THE FACING MATERIAL FROM CRACKING AND FALLING OFF DUE TO EXPANSION OF THE FACE WHEN HEATED, DO NOT ATTACH FACING MATERIAL DIRECTLY TO THE FACE OF THE UNIT. DO NOT OBSTRUCT THE FLOW OF VENTILATION AIR.

CLEARANCES - Minimum clearance to combustible:

From unit sides & back:	0"
From unit top stand-off:	0"
To flooring:	0"
From Vent Pipe:	
Horizontal Runs:	
Top: 1 ½" at wall pass-thru	
Bottom & Sides: 1"	
Vertical Runs:	
All sides: 1"	
From unit side to adjacent sidewall:	0"
From top of unit to 10" mantel*:	9"

*See chart for additional mantel requirements ➡

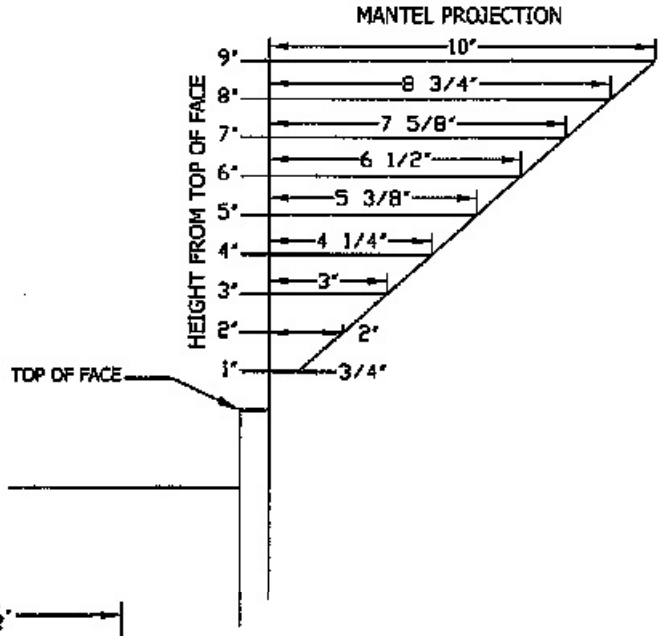

TYPICAL INSTALLATION OPTIONS:

FIGURE 2A

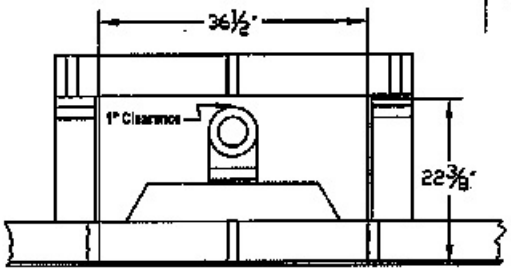

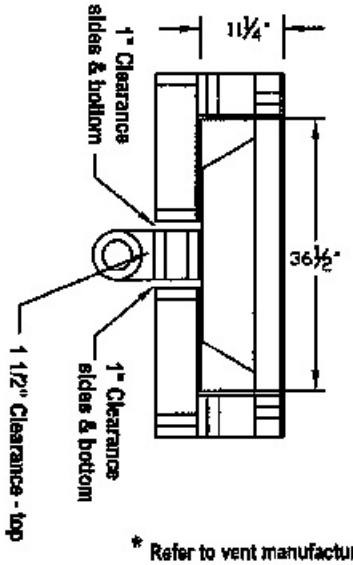

Model #56101 WINDOM

NOTE:
1/4" expansion space included in dimensions.
1/2" wall materials included in dimensions where applicable.

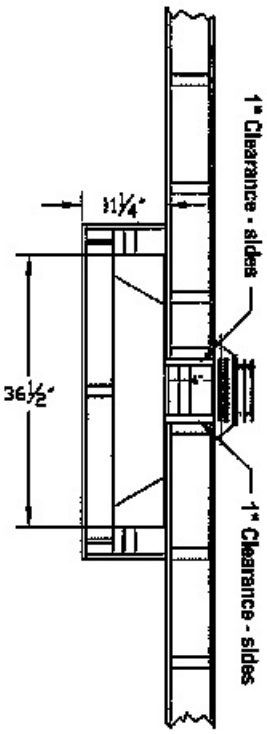

*** Refer to vent manufacturer's specifications.**

TYPICAL CORNER INSTALLATION:

MODEL #56101 'WINDOM'
MINIMUM DIMENSIONS - CORNER INSTALLATION

FIGURE 2B

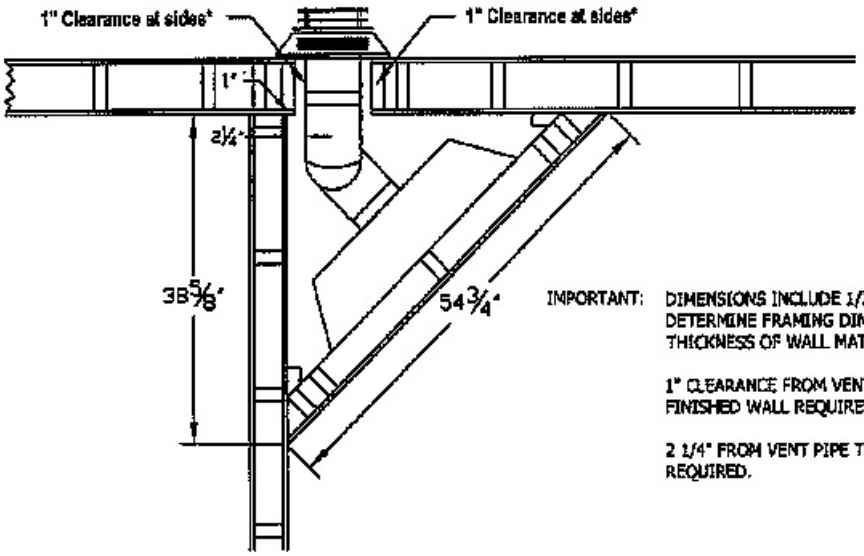

IMPORTANT: DIMENSIONS INCLUDE 1/2" WALL MATERIAL. TO DETERMINE FRAMING DIMENSIONS, SUBTRACT THICKNESS OF WALL MATERIALS.

1" CLEARANCE FROM VENT SYSTEM FRAMING TO FINISHED WALL REQUIRED.

2 1/4" FROM VENT PIPE TO FINISHED WALL REQUIRED.

KOZY HEAT CORNER CABINET INSTALLATION:

MODEL #56101 'WINDOM'
CORNER CABINET DIMENSIONS

FIGURE 2C

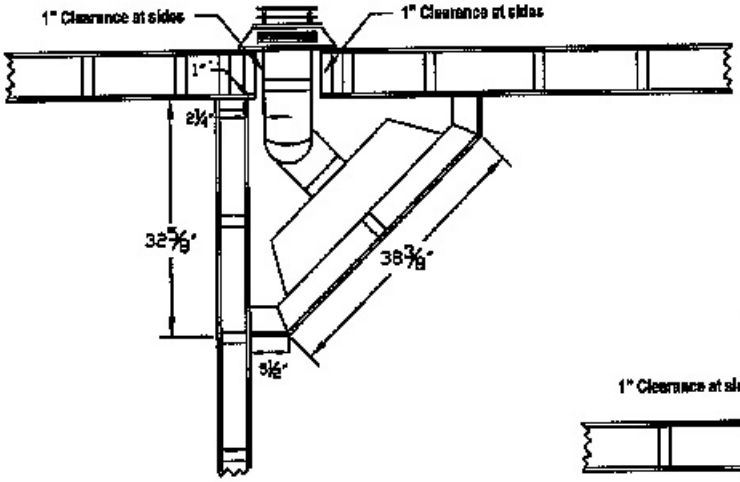

MODEL #56101 'WINDOM'
POSITION FOR CORNER CABINET

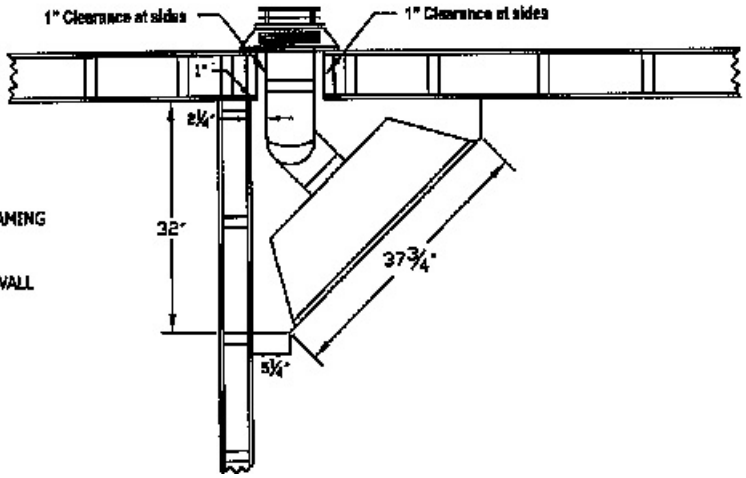

NOTE:

1" CLEARANCE FROM VENT SYSTEM FRAMING TO FINISHED WALL REQUIRED.

2 1/4" FROM VENT PIPE TO FINISHED WALL REQUIRED.

VENTING REQUIREMENTS

THIS MODEL IS APPROVED FOR USE WITH SIMPSON DURA-VENT GS CHIMNEY SYSTEM 4" X 6 5/8" AND AMERI-VENT DIRECT VENT SYSTEM 4" X 6 5/8" FOR HORIZONTAL AND VERTICAL TERMINATIONS.

IMPORTANT: This model is manufactured with the appropriate adaptor for proper connection of EITHER the Simpson Dura-Vent DV-GS Chimney System OR Ameri-Vent Direct Vent System.

Contact your dealer for the appropriate vent kit and components part numbers for the chimney system you are using.

Refer to the vent manufacturer's installation manual for complete installation instructions. Installation must conform with the venting requirements & restrictions as outlined in this manual.

IMPORTANT: Consult the local and national installation codes to assure that adequate combustion and ventilation air is available.

MINIMUM / MAXIMUM VENTING REQUIREMENTS:

Minimum vertical rise / maximum horizontal run: 0" / 14 ft.
Maximum vertical rise: 25 ft. **-** (requires 90° elbow to vertically position the chimney system).
Minimum horizontal vent run: 6"
Maximum horizontal run: 14 ft. (1/4" incline per horizontal foot must be maintained.)

Elbows: (1) 90-degree elbow is included within the maximum vent runs. Each additional elbow reduces the maximum horizontal by 3'.

HORIZONTAL & VERTICAL VENTING CHART

EXAMPLES OF CHART CONFIGURATIONS:

A vertical rise of 8 ft. may run horizontally a maximum 9 ft. 7 in.

Vertical terminations require a 90° elbow to vertically position the chimney.

Horizontal runs within the vertical configuration reduces the maximum vertical run.

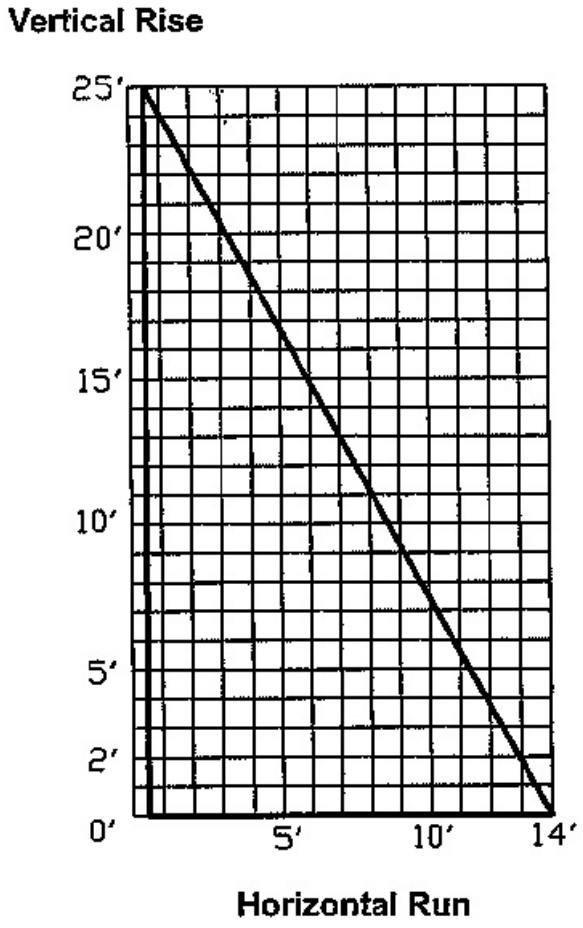

TERMINATION VENT CAP LOCATION

This gas appliance must not be connected to a chimney flue serving another type of appliance.

GENERAL:

1. **Terminations against vinyl siding must use a vinyl siding protector. Follow instructions included.**

2. **DO NOT RECESS TERMINATION KIT INTO OUTSIDE BUILDING MATERIALS - i.e.: brick, stone, etc.. If necessary, extend framing so that termination kit will be exposed once building materials are installed.**

3. **Vent termination must not be located where it will become plugged by snow or other material. The flow of combustion and ventilation air must be not obstructed.**

LOCATION CLEARANCES:

1. **Above grade, veranda, porch, deck, balcony - 12". (A)**
2. **Operable window - 12" (B)**
3. **Permanently closed window - 12" (recommended to prevent condensation on window. (C)**
4. **Ventilated soffit - 24" (D)**
5. **Unventilated soffit - 12" (E)**
6. **Outside / inside corner - 12" (F)**
7. **Meter / Regulator: not to be installed above within 3 ft. horizontally from the center line of the regulator.**
8. **Service regulator vent outlet - 3 ft. radius**
9. **Electrical box - 3 ft. (G) DO NOT INSTALL ABOVE AN ELECTRICAL BOX!**
10. **Non-mechanical air supply inlet to building - 12"**
11. **Combustion air inlet to any other appliance - 12"**
12. **Mechanical air supply inlet - 6 ft. (H)**
13. **Above furnace exhaust or inlet - 12"**
14. **Above paved side-walk or paved driveway located on public property - 7 ft. * (I)**
15. **Under veranda, porch, deck, or balcony (must be fully opened on a min. of 2 sides) - 12" (J)**
16. **Between two horizontal terminations - 12"**
17. **Between two vertical terminations - 12" (K) - Note: May be the same height.**

*** A vent cannot be located directly above a side-walk or paved driveway that is located between two single family dwelling and serves both dwellings.**

FIGURE 3

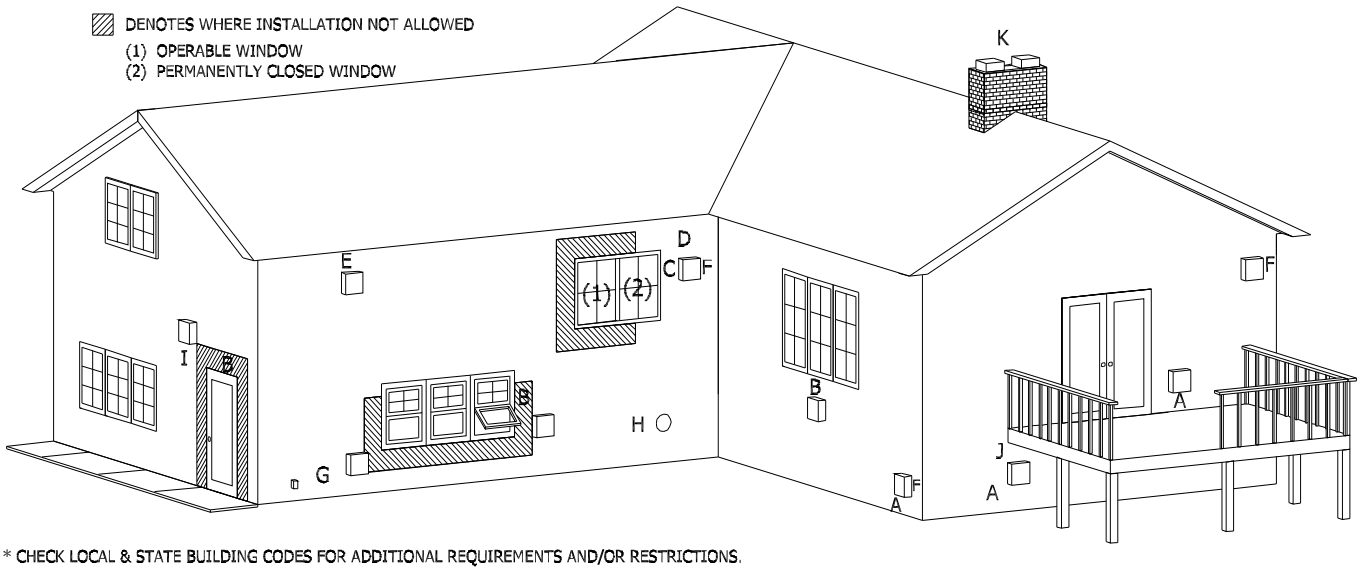

* CHECK LOCAL & STATE BUILDING CODES FOR ADDITIONAL REQUIREMENTS AND/OR RESTRICTIONS.

TYPICAL HORIZONTAL VENTING CONFIGURATIONS

The following are typical horizontal venting configurations which may be used. This generally will be determined by location of the fireplace and how the fireplace will be finished on the interior. IMPORTANT: 1/4" INCLINE PER HORIZONTAL FOOT MUST BE MAINTAINED.

IMPORTANT: PASS-THRU WALL THICKNESS:
Dura-Vent DV-GS 4" x 6 5/8" wall thimble: Minimum wall thickness of 4" / Maximum wall thickness of 7 ½" .
Ameri-Vent Direct Vent system wall thimble: Minimum wall thickness of 4 ½" / Maximum wall thickness of 8 ½ ".

1. DIRECT-THRU-THE-WALL: Figure 4A - Attach a minimum 6" section pipe onto the fireplace followed by the horizontal termination cap. Maximum horizontal run: 14 ft. (1/4" incline for each horizontal foot of chimney must be maintained.)

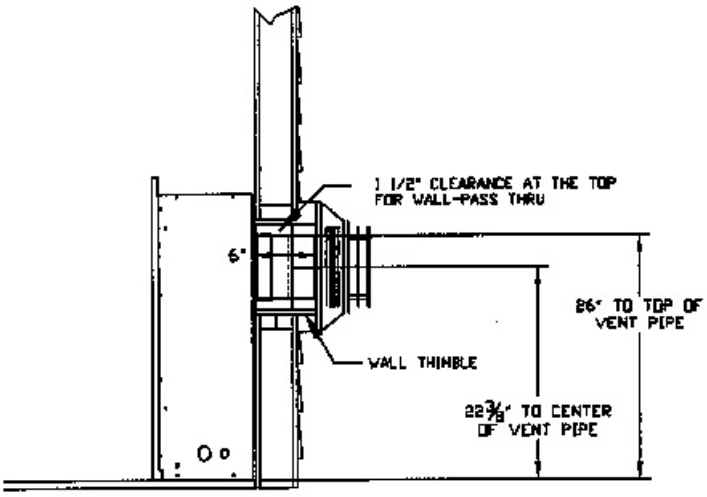

FIGURE 4A

2. HORIZONTAL RUNS USING 2 - 90° ELBOWS: Figure 4B - Attach 90° elbow onto the fireplace to vertically position the chimney, followed by another 90° elbow to horizontally position the chimney, then a minimum 6" / maximum 14 ft. horizontal run (1/4" incline for each horizontal foot of chimney must be maintained.) WORKS WELL FOR CORNER INSTALLATIONS - See page 4.

Venting figuration shown in figure 2C when using the Kozy Heat Corner cabinet: (2) 90° elbows directly off the collars on the fireplace and a 6" - 9" section (depending on wall thickness) to exit through the wall. See figure 4C, page 8.

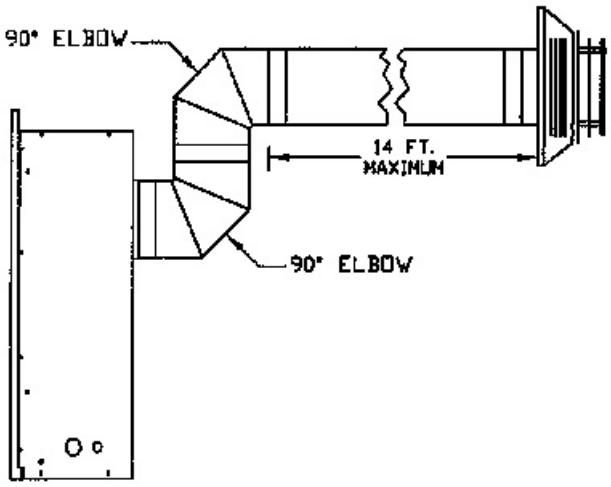

FIGURE 4B

VERTICAL VENTING CONFIGURATION

MAXIMUM VERTICAL RISE* AFTER FIRST ELBOW: 25 FT.

IMPORTANT: Horizontal runs within a vertical termination reduces the maximum vertical height allowed. Refer to the chart on page #5.

***Note:** Maximum vertical rise includes the first elbow to vertically position the chimney.

Elbows: **(1) included to vertically position the chimney. Each additional elbow reduces the maximum horizontal run by 3 ft..**

MINIMUM VENT SYSTEM CLEARANCES FOR VERTICAL TERMINATIONS: 1" ALL SIDES. Refer to vent manufacturer's installation manual for specific information.

WHEN VERTICALLY TERMINATING, THE MINIMUM CHIMNEY HEIGHT ABOVE THE ROOF LINE IS DETERMINED BY THE FOLLOWING CHART:

Roof Pitch	Minimum Chimney Height	Roof Pitch	Minimum Chimney Height
Flat to 6/12	1 ft.	13/12 to 16/12	6 ft.
6/12 to 9/12	2 ft.	17/12 to 21/12	8 ft
10/12 to 12/12	4 ft.		

CAUTION: This gas appliance must not be connected to or joined with any chimney flue serving any other appliance.

FIGURE 4C

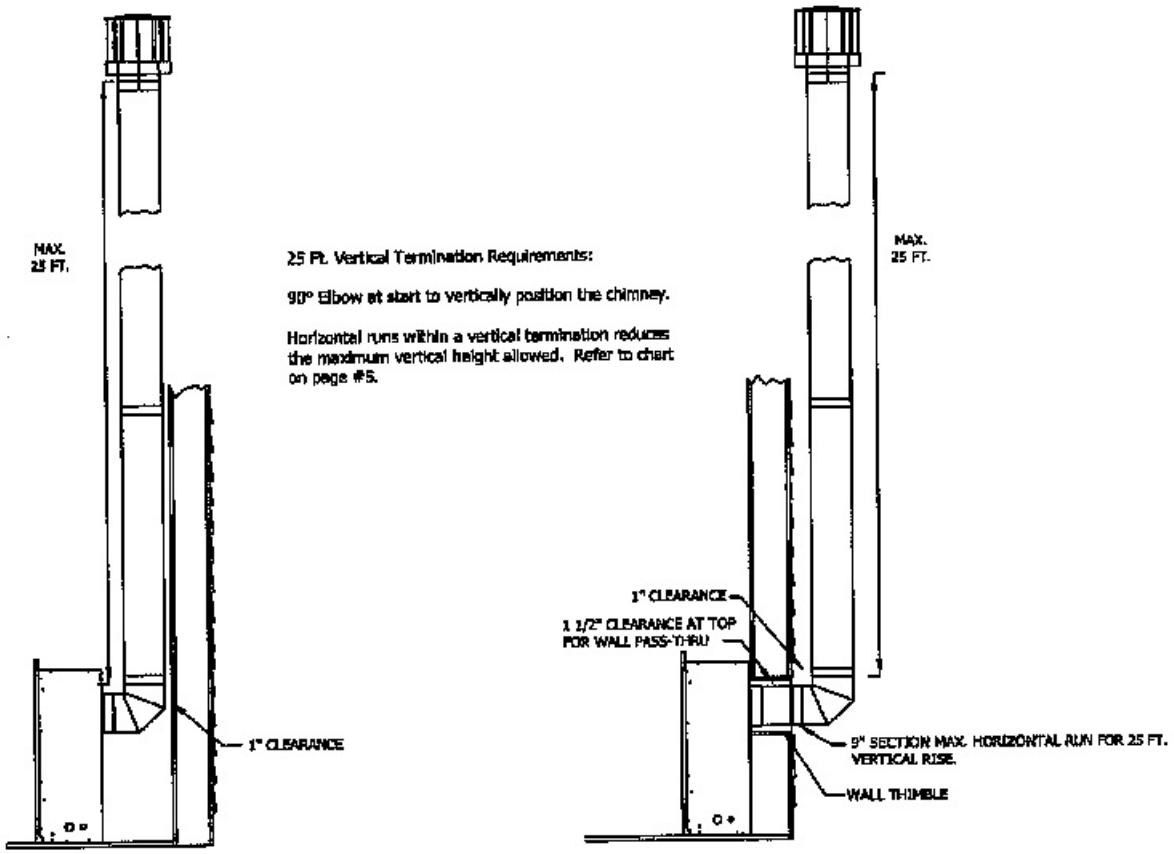

POSITION THE UNIT.

1. Determine the exact position of your fireplace and location where the chimney will exit to the outside. If possible place the fireplace in such a manner that the piping will be placed between two studs so additional framing is not necessary.

   IMPORTANT: Vent cap location must be in compliance with the guidelines on page 6 of this manual.

2. Determine the width, depth and height of the (optional) hearth.

   NOTE: A hearth is not required. If a hearth is desired, combustible materials may be used.

3. Frame an opening on the exterior wall where the for the chimney termination. Refer to the vent pipe manufacturer's instructions for specific height (H) and width (W) framing dimensions.

   The top of this opening must allow a minimum 1 ½" clearance from the top of the chimney system pipe.

   To achieve the minimum venting requirements, a minimum of 26" from the floor or hearth the fireplace is setting on to the top of the vent pipe is required. See figure 5.

   CLEARANCE TO VENT SYSTEM:

   Horizontal runs: Top 1 ½" at wall pass thru
   Sides & Bottom: 1"
   Vertical run: All sides: 1"

IMPORTANT: PASS-THRU WALL THICKNESS:
Dura-Vent DV-GS 4" x 6 5/8" wall thimble: Minimum wall thickness of 4"/ Maximum wall thickness of 7 ½"
Ameri-Vent 4" x 6 5/8" wall thimble: Minimum wall thickness of 4½" Maximum wall thickness of 8 ½"

REFER TO PAGES #5-#8 OF THIS MANUAL FOR REQUIREMENTS & RESTRICTIONS.

FIGURE 5

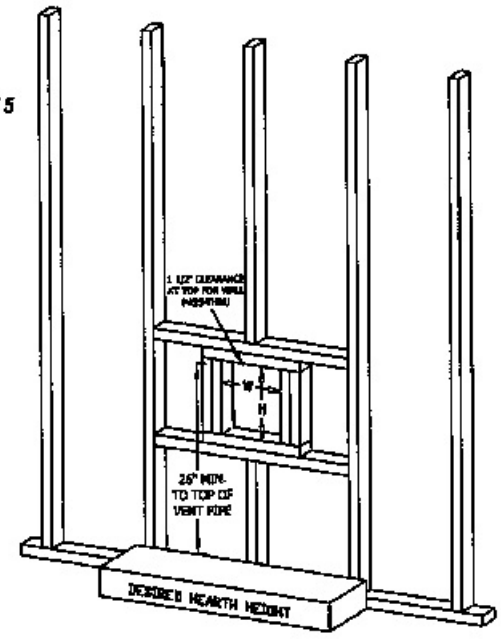

Typical Horizontal Termination

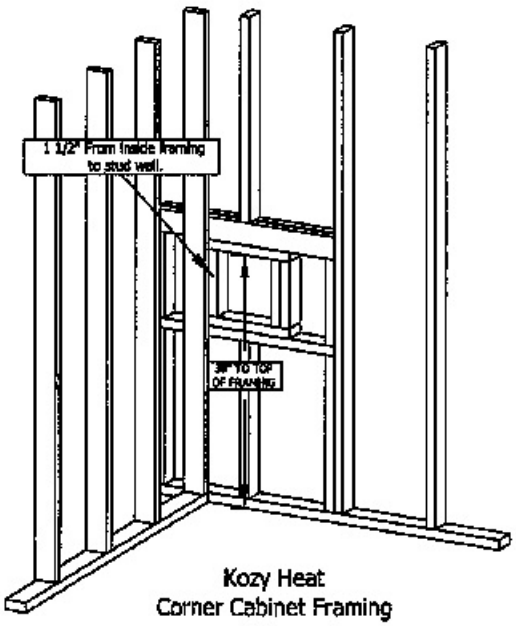

Kozy Heat
Corner Cabinet Framing

CAUTION: COLD AIR TRANSFER AREA. THE SURROUNDING WOOD CHASE OF THE OUTSIDE WALL MUST BE INSULATED TO PREVENT COLD AIR FROM ENTERING THE ROOM.

NOTE: Due to high temperatures, this unit should be located out of traffic areas and away from furniture and draperies.

4. Build the hearth to the desired size and height. See notes below.

5. **Rough in the wall enclosure.** The minimum rough opening dimensions are:

   32 1/4" high
   36 1/2" wide
   11 1/4" deep

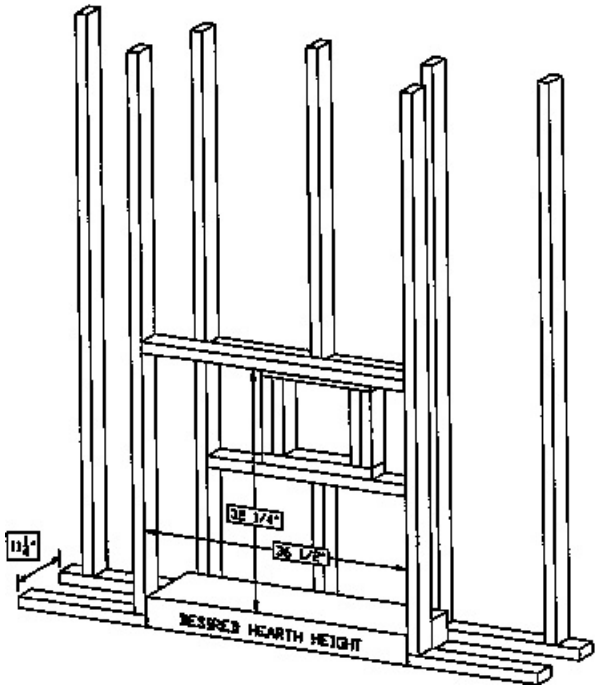

FIGURE 6

NOTE: When the unit is installed directly on carpeting, tile, or other combustible materials other than wood flooring, it must be installed on a metal or wood panel extending the full width and depth of the unit. The minimum for the support platform under the unit is 11" deep by 36" wide. If masonry is to be used (optional), prepare the necessary foundation for the masonry load. When masonry construction is being used, a lintel must be used over the top of the unit to support the added weight.

NOTE: A non-combustible hearth extension is not required. If a hearth extension is desired, combustible materials may be used.

NOTE: Provide for a minimum of 6" of clearance in front of the lower grill. This will provide adequate space to open the lower grill and operate the controls. Do not obstruct the upper and lower grill areas to allow proper ventilation air around the unit. Air enters the unit at the lower grill, and exits at the upper grill. Blocking these passages may result in overheating the fireplace creating a potentially hazardous situation.

6. **Place the unit into position. Figure 6A**

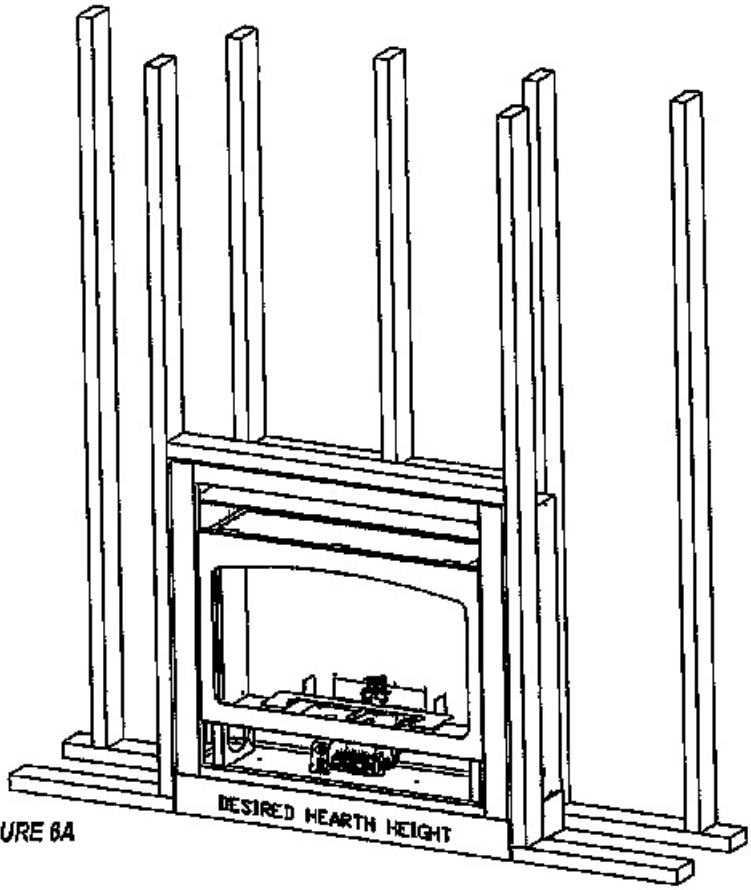

FIGURE 6A

REMOVE THE GLASS ASSEMBLY.
See Figure 7.

1. Locate the spring-loaded handles securing the glass assembly (under the firebox).
2. Pull the handles out, then down to release the glass assembly.
3. Pull the bottom of the glass assembly out and lift up off the tabs (at the top).
4. Set aside where it will not be broken.
5. Remove the log package from the firebox and set aside.

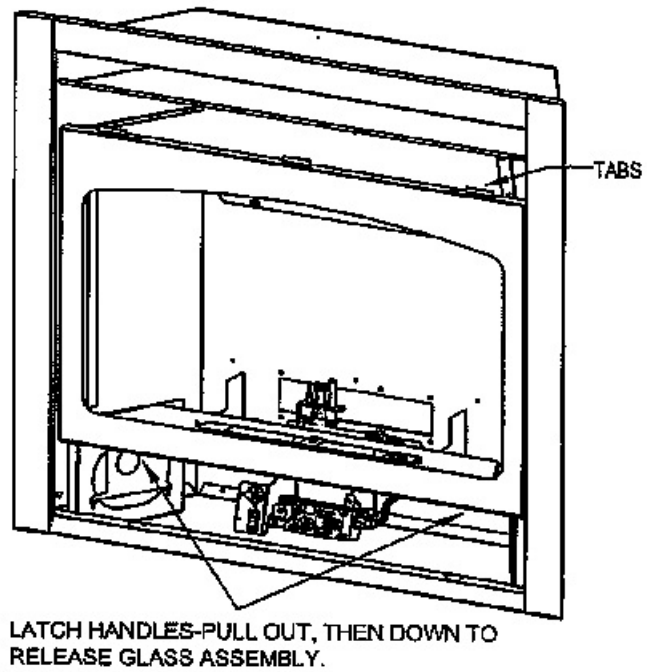

FIGURE 7

HORIZONTAL & VERTICAL VENTING APPLICATIONS

1. INSTALL THE CHIMNEY SYSTEM FOR YOUR VENTING CONFIGURATION FOLLOWING THE CHIMNEY MANUFACTURERS' INSTRUCTIONS INCLUDED WITH THE CHIMNEY SYSTEM.

   NOTE: All clearances to vent system must be maintained.

IMPORTANT:	**Simpson Dura-Vent DV-GS Chimney System: All joints on both the 4" and 6 5/8" sections of the pipe must be sealed. Use the sealant provided with the fireplace or the equivalent.**

Fan Kit #WDM-028 (optional component)
Installation Instructions

INSTALLATION OF THIS FAN SHOULD BE DONE ONLY BY A QUALIFIED INSTALLER

IMPORTANT: **If a fan is going to be installed, it is easier to complete before the millivolt board is connected to the gas line.**

The wiring must be done prior to enclosing the sides of the unit. An electrical box and romex connector are already installed in the fireplace. The duplex receptacle, receptacle cover and screws are included in the fireplace components packet.

NOTE: **This fireplace has a removable electrical panel on the left side of the fireplace to aide in the fan wiring.**

This optional fan kit #WDM-028 includes:

1. **Right and left fan assemblies with fans with temperature control switch**
2. **Components Package:** **Speed control with mounting bracket, nut & knob, installation instructions.**

NOTE: **To wall-mount the speed control, you will need to purchase:** **(1) Electrical box**
(1) Cover / switch plate

NOTE: **Code approved line voltage wiring 16 gauge or better must be used when wiring this system.**

WARNING: This appliance is equipped with a three-prong (grounding) plug for protection against shock hazard and should be plugged directly into a properly grounded three-prong receptacle. Do not cut or remove the grounding prong from this plug.

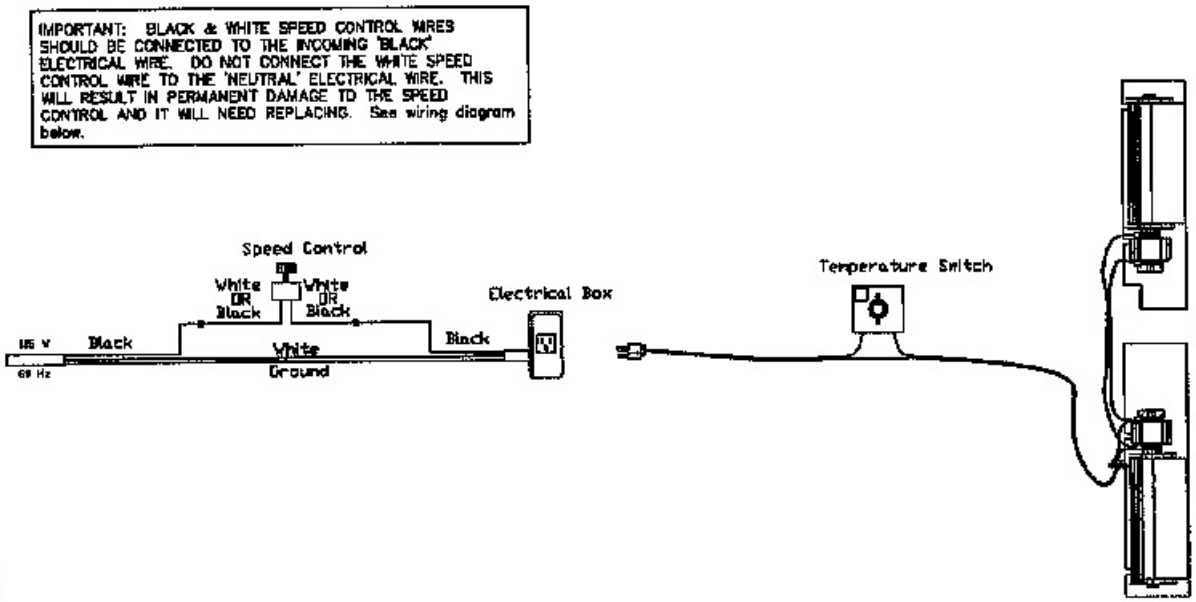

FIGURE 8

FAN KIT INSTALLATION INSTRUCTIONS

IMPORTANT: The fans are connected together, lift both fans out of the box at the same time to avoid possible damage to the wires and/or connectors.

Note: Millivolt board has been removed for clarity. It is not necessary to remove the millivolt board to install this optional fan kit.

1. Remove the lower grill if it has not been previously removed.
2. Slide the left and right fans through the lower grill opening (rt. side of the valve) pushing them all the way to the back of the fireplace.
3. Slide the left fan assembly to the left until it stops and slide the right fan assembly to the right until it stops.

   NOTE: Each fan bracket is held in position by a strip magnet attached to the bottom of each bracket.

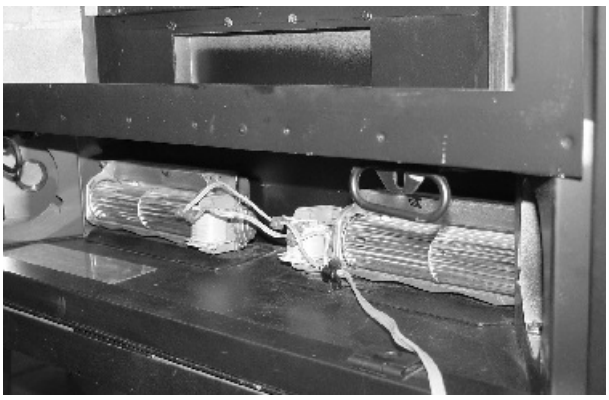

FIGURE 9A

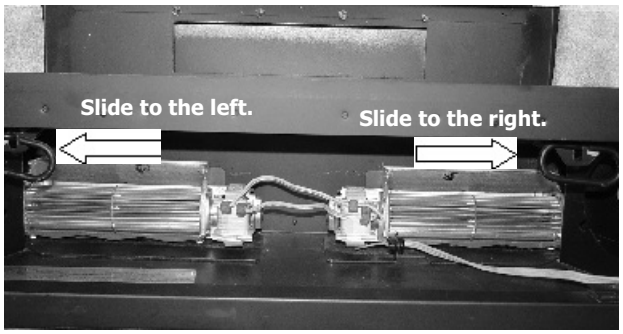

FIGURE 9B

4. Install electrical box and mount the speed control on a wall, if desired.
5. Remove the electrical panel on the left side of the fireplace. Insert 115V wiring (with ground) through the romex connector installed in the electrical box and wire to the receptacle.
6. Secure receptacle into the electrical box.
7. Install the cover onto the electrical box and secure with screws.
8. Replace the electrical panel and secure with screws.
9. Place the temperature control switch on the bottom of the firebox.

10. Plug cord into receptacle in the electrical box.
11. Turn on/off speed control counter-clockwise until it 'clicks'. This is the 'OFF' position.
12. Turn the speed control 'ON' by turning the know clockwise past the 'click' - this is the highest setting.

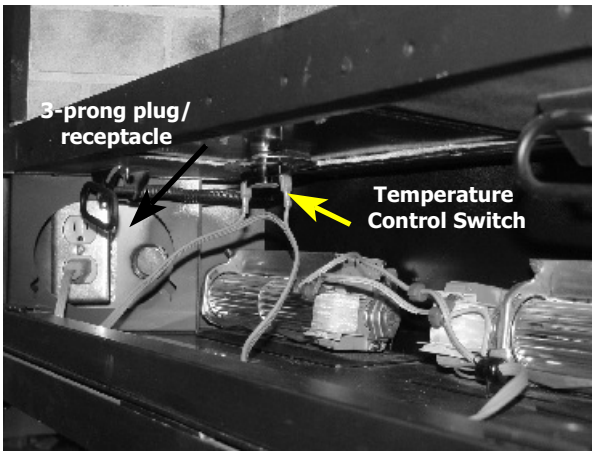

FIGURE 9C

NOTE: *The fan will not operate unless the speed control has been turned 'ON' and sufficient heat has been applied to the temperature control switch. The fan will turn 'ON' and 'OFF' automatically when the fireplace heats and cools. Adjust fan to desired speed while it is running.*

NOTE: This appliance must be electrically grounded and connected in accordance with local codes, or in the absence of local codes, with the National Electrical Code, ANSI/NFPA 70-Current edition.

RUN THE GAS LINE

CAUTION: Installation of the gas line must only be done by a qualified person in accordance with local building codes.

GAS CONVERSIONS

If a gas conversion is necessary, one of the following conversions kits must be used:

Natural Gas Conversion Kit #OCK-H42N - used to convert an LP Gas millivolt board to natural gas.

LP Gas Conversion Kit #OCK-H55N - used to convert a Natural Gas millivolt board to LP Gas.

The conversion shall be carried out in accordance with the requirements of the provincial authorities having jurisdiction and in accordance with the requirements of the ANSI Z223.1 installation code.

NOTE: This unit is equipped with a 3/8" x 12" long flexible gas connector and manual shut off valve.

NOTE: The gas line should be run to the point of connection where the shut-off valve and flexible gas line will connect.

CAUTION: The manual shut-off valve or flexible gas tubing must not extend outside of the unit cavity. See the WARNING label affixed to the flexible tubing for additional installation instructions and warnings.

NATURAL GAS:

The minimum inlet gas supply pressure: 5.0 inches W.C. (7.0 inches W.C. recommended)
The maximum inlet gas supply pressure: 10.5 inches W.C.
Manifold pressure: 3.5 inches W.C.
Manifold pressure (lo setting): 1.7 inches W.C.

Orifice size: 42	***Input: 23,000 BTU/hr.***	***Efficiency: 69.1%***	***AFUE: 68.4%***
	Minimum input: 16,000 BTU/hr		***P4-AFE: 56.1%***

LP GAS:

The minimum inlet gas supply pressure: 11.0 inches W.C. (recommended)
The maximum inlet gas supply pressure: 13.0 inches W.C.
Manifold Pressure: 10.0 inches W.C.
Manifold Pressure (lo setting): 5.4 inches W.C.

Orifice size: 55	***Input: 19,000 BTU/hr.***	***Efficiency: 66.2%***	***AFUE: 65.30%***
	Minimum input: 14,000 BTU/hr		***P4-AFE: 55.53%***

IMPORTANT: The efficiency rating of this appliance is a product thermal efficiency rating determined under continuous operating conditions and was determined independently of any installed system. To maintain proper efficiency, the pilot must be shut off when this fireplace is not in operation.

NOTE: For high altitude installations consult the local gas distributor or the authority having jurisdiction for proper rating methods.

1. *Run the gas line. An accessible shut off valve must be installed up stream from the regulator.*

NOTE: Do not run the incoming gas line in a manner that would obstruct the operation of the optional fan.

2 . *This unit is designed to accept either a 3/8" or 1/2" gas line approved for gas appliances. Consult local building codes to properly size the gas supply line leading to a 3/8" reduction.*

3. *A gas line knockout is positioned on either side of the unit for gas line connection.*

4. *Connect the gas line to the manual shut-off valve.*

5. *Connect the flexible gas line (installed on the millivolt board valve) to the manual shut off valve.*

IMPORTANT:
ALL CONNECTIONS WHETHER FIELD OR FACTORY MADE MUST BE CHECKED FOR LEAKS!

NOTE: The appliance and its individual shutoff valve must be disconnected from the gas supply piping system during any pressure testing of that system at test pressures in excess of ½ psi.

NOTE: The appliance must be isolated from the gas supply piping system by closing its individual manual shutoff valve during any pressure testing of the gas supply piping system at test pressures equal to or less than ½ psi.

Pressure check taps for both the manifold (outgoing) & inlet (incoming) pressures are located in front of the gas valve. The top pressure tap is the manifold pressure and the bottom pressure tap is the incoming pressure. Follow instructions on page #21 for checking these pressures.

SECURE THE MILLIVOLT BOARD:

This unit is equipped with the millivolt board , log plate & burner tube already installed.

1. *Referring to the the 'INSTALLING THE MILLIVOLT BOARD' section on pages 23-24, check to ensure that all (6) nuts securing the millivolt board are in place and properly tightened.*

2. *Ensure that the burner tube is properly positioned over the burner orifice.*

LOG INSTALLATION

This log set includes:	(1) W5 Log	(1) W6 Log	(1) W7 Log	(1) Klinker packet
	(1) W8 Log	(1) W9 Log	(1) W10 Log	(1) Rock wool ember packet

NOTE: *The logs are numbered on the bottom side - refer to the instructions below for proper placement. The base logs have mounting holes Incorporated into the bottom of the logs and should be positioned onto the corresponding mounting studs. Alignment cut-outs have been designed into the logs for positioning. Their location on the logs are represented as an (*) symbol in the photo below.*

FIGURE 10A

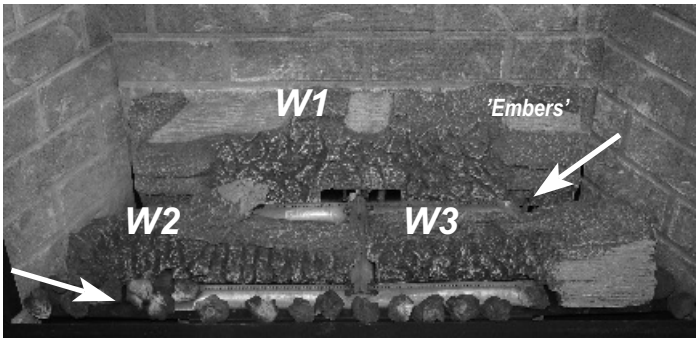

Refer to the figure 10A above for steps #1 - #3:

1. Place back base log 'W5' into position aligning the slots in the bottom of the log (one on each end) onto the burner cover and the notched out section in the log around the pilot assembly. Once positioned, press down slightly to secure in place.
2. Position the remaining base logs, 'W6' & 'W7' into the center of the burner as shown. ***Natural Gas models***: Push the logs back against the burner tube.
3. Carefully place the rock wool embers as desired onto the logs and burner tube to create additional glow. Do not plug burner port holes or use excessively. Place the 'klinkers' onto the burner plate and in front of the burner tube as shown above.
   Note: *You will not use all the 'embers' in the packet - save for future use.*

CAUTION:	***DO NOT COVER THE BURNER PORTHOLES IN FRONT OF THE PILOT. BLOCKING THESE PORTHOLES MAY RESULT IN DELAYED IGNITION OF THE BURNER.***

FIGURE 10B

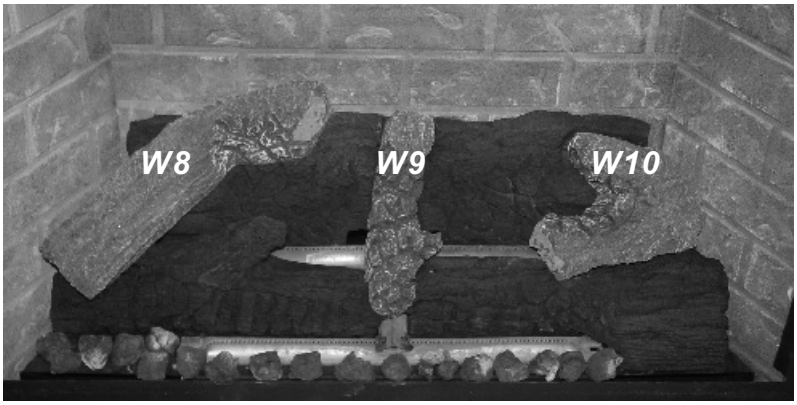

4. Position the 'W8' log, 'W9' log & 'W10' log onto the alignment cut-outs as shown in figure 10B .

INITIAL BURN PERIOD

During the initial burn period, the logs and refractory will discolor. This is normal and part of the curing process. Once the curing process is complete (approximately 2-4 hours), the true color will return.

IMPORTANT: DO NOT BURN THIS FIREPLACE WITHOUT THE GLASS ASSEMBLY IN PLACE.
MAKE SURE THE HOMEOWNER IS AWARE OF THIS!

THERMOSTAT - WALL SWITCH - REMOTE INSTALLATION (OPTIONAL).

CAUTION: DO NOT CONNECT HIGH VOLTAGE (115V) WIRE TO THE GAS VALVE!

NOTE: INSTALLATION OF A THERMOSTAT OR WALL SWITCH SHOULD ONLY BE DONE BY A QUALIFIED INSTALLER.

If desired, a thermostat (wireless style available), wall switch, or remote control assembly may be used to turn the fireplace 'OFF' and 'ON'. ONLY one of these may be installed. Follow instructions included with each assembly.

NOTE: OPEN THE VALVE COVER TO EXPOSE THE GAS VALVE AND WIRE CONNECTION ON THE VALVE TERMINALS.

Disconnect the on/off rocker switch wires from the top & bottom terminals on the gas valve.

Thermostat Wiring Diagram

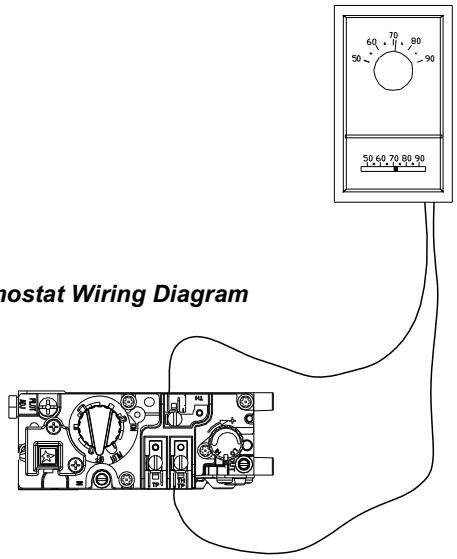

REMOTE CONTROL USERS:

Follow instructions included with the remote control.

IMPORTANT: The insulated cover included with the remote control must be placed over the remote receiver to protect it from overheating.

WALL SWITCH / THERMOSTAT USERS:

Run low-voltage (thermostat) wires from the terminals on the gas valve to the desired location of the wall switch or thermostat.

Attach the appropriate connector to each wall switch / thermostat wire and connect to the top and bottom terminals on the gas valve marked 'TH'.

Remote Control Wiring Diagram

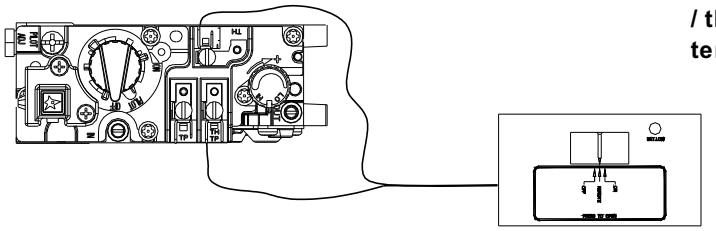

COMPLETE THE INSTALLATION

1. A) *Secure the stud tabs located on the sides of the unit to the stud walls.*
   B) *Use screws (not provided) to secure the unit to the flooring through the holes located in the bottom of the outer box. IMPORTANT - MOBILE HOME INSTALLATIONS: THE FIREPLACE MUST BE SECURED TO THE FLOOR.*
   C) *Complete the fireplace walls, and the unit facing.*

CAUTION: THE SURROUNDING WOOD CHASE OF THE OUTSIDE WALL MUST BE INSULATED TO PREVENT COLD AIR FROM ENTERING THE ROOM.

2. *THIS STEP SHOULD ONLY BE DONE BY A QUALIFIED INSTALLER OR SERVICE TECHNICIAN:*

   A) *Perform lighting and shutdown procedures as described on pages #20-21 . This should be done prior to replacing the glass so that any necessary adjustments can be made and proper operation verified.*

3. *Replace the glass. Refer also to Figure 7, pg.11.*

   A) *Align the slots in the top of the glass assembly over the tabs on the fireplace.*
   B) *Place the glass assembly so it is flush with the front of the fireplace front.*
   C) *Secure the assembly to the fireplace by pulling the two spring loaded handles (located under the firebox) out and up over the latch brackets. Release, locking them into position.*

WARNING: DO NOT OPERATE THIS FIREPLACE WITH THE GLASS ASSEMBLY REMOVED, CRACKED OR BROKEN. Replacement of the glass assembly, part #700-07T should be done by a licensed or qualified service person.

4. *Upper Grill - Install:*
   A) *Line the rods of the grill up with the upper holes.*
   B) *Place the rods in the holes and push up until the bottoms of the rods clear the glass frame.*
   C) *Place the bottom of the rods into the lower holes and release. The grill will set down into place.*

   Remove:
   A) *Lift the upper grill up far enough to clear the bottom holes and pull bottom of grill out.*

5. *Lower grill - See Figure 12*

   Replace:
   A) *Remove the 1/4" nuts (B) from the lower grill assembly.*
   B) *Slip the bolt through the hinge (A).*
   C) *Re-attach the 1/4" nut (B).*
   D) *Repeat "A" through "C" for the remaining hinge.*

   The grill is now in place. The grill may be lowered for accessing the control valve, service, etc.

   Remove:
   A) *Remove the 1/4" nuts (B) from the lower grill assembly.*
   B) *Pull the entire grill assembly out of the hinges.*
   C) *Re-attach the 1/4" nuts (B).*

FIGURE 12

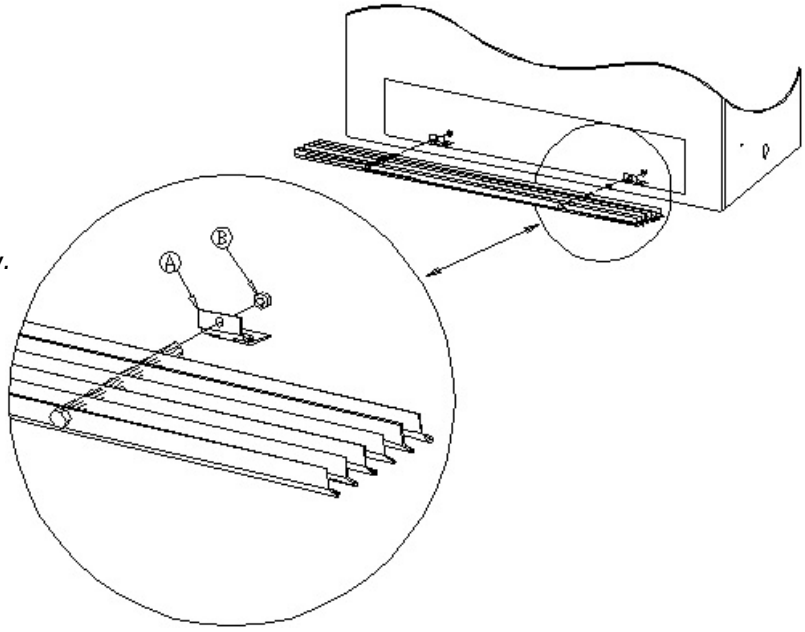

LIGHTING & SHUTDOWN

NOTE: Prior to lighting, check all fittings for leakage. This is accomplished by applying soapy water on all connections made. If there is any leakage, bubbles will appear at the point of connection. If bubbles occur, tighten the fittings until the bubbles no longer appear.

IMPORTANT: TEST ALL CONNECTIONS WHETHER FIELD OR FACTORY MADE.

NOTE: The appliance and its individual shutoff valve must be disconnected from the gas supply piping system during any pressure testing of that system at test pressures in excess of ½ psi.

NOTE: The appliance must be isolated from the gas supply piping system by closing its individual manual shut off valve during any pressure testing of the gas line at test pressures equal to or less than 1/2 psig (3.5 kPa).

Pressure check taps for the manifold (outgoing) and inlet (incoming) pressures are located in front of the gas valve. The top pressure tap is the manifold pressure and the bottom pressure tap is the incoming pressure. Follow instructions on page #21 for check these pressures.

FOR YOUR SAFETY - READ BEFORE LIGHTING

WARNING: If you do not follow these instructions exactly, a fire or explosion may result causing property damage, personal injury or loss of life.

1. This appliance has a pilot which must be lighted by hand. When lighting the pilot, follow these instructions exactly.
2. BEFORE LIGHTING, smell all around the appliance for gas. Be sure to smell next to the floor because some gas is heavier that air and will settle on the floor.
3. Use only your hand to push in or turn the gas control knob. Never use tools. If the knob will not push in, or turn by hand, don't try to repair it, call a qualified service technician. Forced or attempted repair may result in a fire or explosion, and loss of warranty.
4. Do not use this appliance if any part has been under water. Immediately call a qualified service technician to inspect the appliance and to replace any part of the control system which has been under water.

DO NOT STORE OR USE GASOLINE OR OTHER FLAMMABLE VAPORS AND LIQUIDS IN THE VICINITY OF THIS OR ANY OTHER APPLIANCE.

DUE TO HIGH SURFACE TEMPERATURES, KEEP CHILDREN, CLOTHING AND FURNITURE AWAY

This appliance needs fresh air for safe operation and must be installed so there are provisions for adequate combustion and ventilation air.

WHAT TO DO IF YOU SMELL GAS:

*Do not touch electrical switches.
*Do not try to light any appliance.
*Do not use any phone in your building.
*Follow the gas supplier's instructions
*Immediately call your gas supplier from a neighbor's phone.
*If you cannot reach your gas supplier, call the fire department.

LIGHTING INSTRUCTIONS

1. STOP! Read safety information above.
2. Open the lower grill by grasping the center of the top louver, then pull out and down to access the gas valve.
3. Set the thermostat to the lowest setting. (If installed)
4. Turn off all electric power to the appliance. (Fan)
5. Push in black control knob (A) slightly and turn clockwise ↘ to "OFF". Gas valve

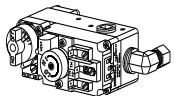

NOTE: Knob cannot be turned from "PILOT" to "OFF" unless knob is pushed in slightly. Do not force.

6. Wait five (5) minutes to clear out any gas. If you then smell gas, STOP! Follow the safety information on page 20. If you don't smell gas, go to the next step.
7. Find the pilot - follow metal tube from gas control. The pilot is behind the burner tube. Pilot
8. Turn the black control knob (A) on the gas valve counterclockwise ↙ to "PILOT".

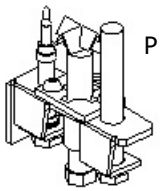

9. Push in the black control knob all the way and hold in. Press the SQUARE igniter button (B). The pilot will generally light with two or three pushes on the igniter. Hold the knob in for about one (1) minute after the pilot is lit. Release knob and it will pop back out. Pilot should remain lit. If it goes out, repeat steps 5 through 9.

*If knob does not pop out when released, stop and immediately call your service technician or gas supplier.
*If the pilot will not stay lit after several tries, turn the gas control knob to "OFF" and call your service technician or gas supplier.

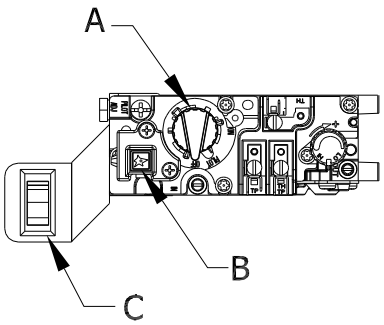

10. Turn black control knob (A) counterclockwise ↙ to "ON".
11. Flip the ON/OFF switch (C) to the "ON" position. If using a thermostat, leave on/off switch 'OFF' and set the thermostat to desired setting.
12. Close the lower gril
13. Turn on electric power to the fireplace.

NOTE: When the unit is initially lit, condensation will appear on the glass, this is normal in all gas fireplaces, and will disappear in one to three minutes.

14. If you wish to turn the burner off, flip the on/off switch to the 'OFF' position. If a wall switch has been installed, simply turn it off. If a thermostat has been installed, simply adjust temperature setting.

NOTE: The pilot will stay lit.

TO TURN GAS OFF TO APPLIANCE

1. Open the lower grill by grasping the center of the top louver, then pull out and down to access the gas control valve.
2. Set the thermostat to the lowest setting. (If installed)
3. Turn off all electric power to the appliance if service is to be performed.
4. Push in control knob(A) slightly and turn clockwise ↘ to "OFF". Do not force.

KEEP BURNER & CONTROL COMPARTMENT CLEAN. SEE INSTALLATION AND OPERATING INSTRUCTIONS ACCOMPANYING APPLIANCE.

INITIAL BURN PERIOD

AN ODOR WILL OCCUR DURING THE FIRST FEW HOURS OF BURNING. THIS IS THE PAINT CURING AND SUBSTANCES USED IN THE MANUFACTURING PROCESS. IT IS RECOMMENDED TO LEAVE THE FAN (IF INSTALLED) OFF DURING THIS PERIOD AS IT WILL SPEED UP THE PAINT CURING PROCESS.

DUE TO THE MAKEUP OF THE LOGS & REFRACTORY, THEY WILL DISCOLOR DURING THE INITIAL BURNER PERIOD. THIS MAY TAKE UP TO 4 HOURS OF BURN TIME. ONCE THE CURING PROCESS IS COMPLETE, THE TRUE COLOR WILL RETURN.

IMPORTANT: DO NOT BURN THIS FIREPLACE WITHOUT THE GLASS ENCLOSURE PROPERLY IN PLACE.
MAKE SURE THE HOMEOWNER IS AWARE OF THIS

NOTE: Children and adults should be alerted to the hazards of high surface temperature and should stay away to avoid burns or clothing ignition. Young children should be carefully supervised when they are in the same room as the appliance.

Clothing or other flammable material should not be placed on or near the appliance.

NOTE: THIS FIREPLACE MAY PRODUCE NOISES OF VARYING DEGREE AS IT HEATS AND COOLS TO DUE METAL EXPANSION AND CONTRACTION. THIS IS NORMAL AND DOES NOT AFFECT THE PERFORMANCE OR LONGEVITY OF THE FIREPLACE.

PRESSURE TESTING
MANIFOLD & INLET PRESSURE

IMPORTANT NOTICE: A pressure check tap for both the manifold (outgoing) and inlet (incoming) pressure has been incorporated into the gas valve. The top pressure tap is the manifold pressure and the bottom pressure tap measures the incoming pressure. Follow the instructions below for proper pressure testing procedures.

TO CHECK THE MANIFOLD PRESSURE:

1. ***Light pilot .***
2. ***Loosen the manifold pressure tap [D] by turning the screw counter-clockwise.***
3. ***Attach manometer to pressure tap using a 5/16" I.D. hose [F].***
4. ***Turn black control knob [A] to the 'on' position.***
5. ***Turn the burner on by depressing the rocker switch [C] to expose the 'red' and note manometer reading.***
6. ***Turn the rocker switch [C] to the 'off' position.***
7. ***Disconnect manometer hose and tighten screw (clockwise).***
   Screw should be snug, do not over tighten.
8. ***Attach manometer to manifold pressure tap to verify that it is completely sealed.***
   Manometer should read no pressure when the rocker switch is turned on.

NOTE: If manifold pressure reading is within the normal range, an incoming pressure check is not necessary. A too high or too low pressure reading warrants an inlet (incoming) gas pressure check.

TO CHECK THE INLET PRESSURE:

1. ***Loosen Inlet pressure tap screw [E] by turning screw counter-clockwise.***
2. ***Attach manometer using a 5/16" I.D. hose [F].***
3. ***Light the pilot.***
4. ***Turn the black control knob [A] to the 'on' position. (Burner should not come on) and note manometer reading.***
5. ***Turn the rocker switch [C] to the 'on' position and check the pressure to ensure that it stays near the maximum inlet pressure.***
6. ***Turn the rocker switch [C] to the 'off' position.***
7. ***Turn the pilot to the 'off' position.***
8. ***Disconnect hose and tighten screw (clockwise). Screw should be snug, do not over tighten.***
9. ***Relight pilot and turn the control knob [A] to the 'on' position. Attach manometer to the inlet pressure tap to verify that it is completely sealed. Manometer should read no pressure.***

NOTE: If Inlet pressure reading is too high or too low, contact the gas company. Only a qualified gas service technician should adjust the incoming gas pressure.

CAUTION: A LOW PRESSURE READING CAN CAUSE DELAYED IGNITION.

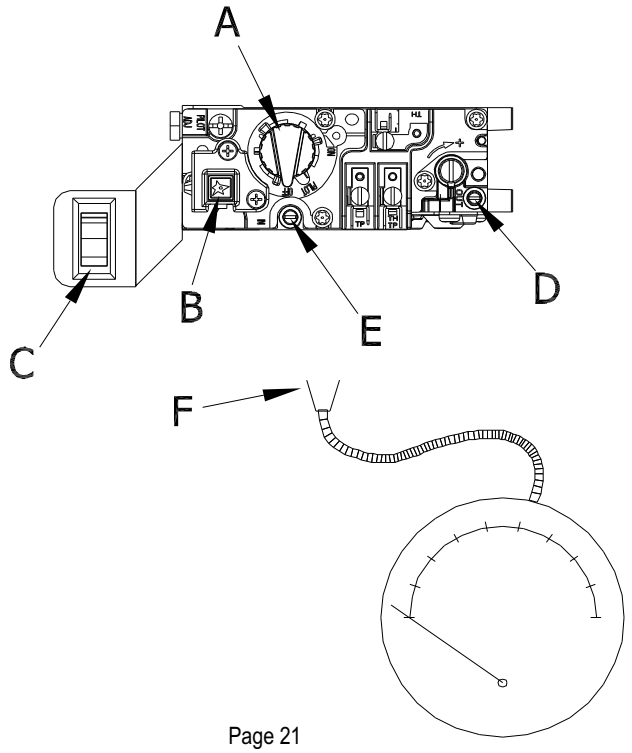

MAINTENANCE REQUIREMENTS

1. The appliance should be inspected at least once a year by a professional service person.

NOTE: INSTALLATION AND REPAIR SHOULD BE DONE ONLY BY A QUALIFIED SERVICE PERSON. THE APPLIANCE SHOULD BE INSPECTED BEFORE USE AND AT LEAST ANNUALLY BY A QUALIFIED SERVICE PERSON. MORE FREQUENT CLEANING MAY BE REQUIRED DUE TO EXCESSIVE LINT FROM CARPETING, BEDDING MATERIALS, ETC. IT IS IMPERATIVE THAT CONTROL COMPARTMENTS, BURNERS AND CIRCULATION AIR PASSAGEWAYS OF THE APPLIANCE BE KEPT CLEAN.

2. The compartment below the firebox (behind the lower grill) must be cleaned at least once a year, more frequent cleaning may be required due to excessive lint from carpeting, bedding materials, or other fibrous materials. It is imperative that the burner be cleaned once a year.

FAN
The fan should be disconnected from electrical current, and cleaned (vacuumed) every six months. The bearings are sealed and require no oiling.

VENT SYSTEM
Annual examination of the venting system by a qualified agency is required.

IF THE VENT-AIR INTAKE SYSTEM IS DISASSEMBLED FOR ANY REASON, REINSTALL PER THE INSTRUCTIONS PROVIDED WITH THE INITIAL INSTALLATION.

1. *Remove the upper grill.*
2. *Remove the glass from the front of the unit.*
2. *For easier access, remove the logs.*
3. *Cover the millivolt board system.*
4. *Loosen the nuts securing the baffle at the back of the firebox and remove the baffle.*
5. *Examine proper sealing of the vent system.*
6. *Replace the baffle and secure the nuts.*
7. *Replace the logs, glass and upper grill.*

The flow of combustion and ventilation air must not be obstructed.

IMPORTANT: ANY SAFETY SCREEN OR GUARD REMOVED FOR SERVICING MUST BE REPLACED PRIOR TO OPERATING THE APPLIANCE

CAUTION: LABEL ALL WIRES PRIOR TO DISCONNECTION WHEN SERVICING CONTROLS. WIRING ERRORS CAN CAUSE IMPROPER AND DANGEROUS OPERATION. VERIFY PROPER OPERATION AFTER SERVICING.

MILLIVOLT BOARD SYSTEM

1. *Annual cleaning of the burner is required. The log plate and burner tube may be removed for easier access.*
2. *Remove the logs and log plate.*
3. *Remove the burner tube by lifting it up off the tabs and sliding it off the burner orifice..*
4. *Visually check for blocked port holes, especially near the pilot. Blocked port holes may cause delayed ignition.*
5. *Replace components by following the instructions found in section 'N' Millivolt Board Removal / Installation of this manual.*

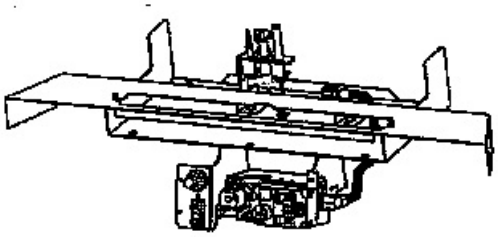

Millivolt board

5. Visually check the pilot light and burner when they are burning. See Figures above and below. The flames should be steady, not lifting or floating.

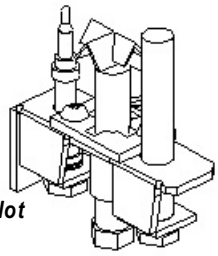

Pilot

Burner Orifice

GLASS CLEANING & REPLACEMENT

- *Clean glass only when cool and only with non-abrasive cleansers.*
- *Do not operate this fireplace with the glass/frame assembly remove, cracked or broken.*
- *The glass assembly, Part #700-07T, shall only be replaced as a complete unit, as supplied by Hussong Mfg. Co., Inc.*
- *Replacement of the glass & gasket assembly, Part #700-07T, must only be performed by a licensed or qualified service person. DO NOT SUBSTITUTE MATERIALS.*
- *Do not strike or slam glass door assembly.*

CAUTION: KEEP THE APPLIANCE AREA CLEAR OF COMBUSTIBLE MATERIALS, SUCH AS GASOLINE AND OTHER FLAMMABLE VAPORS AND LIQUIDS.

MILLIVOLT BOARD REMOVAL / INSTALLATION

NOTE: This unit is equipped with the millivolt board secured and log plate assembly already in position. Follow these procedures should the millivolt board need replacing or is removed for servicing.

MILLIVOLT BOARD REMOVAL:

CAUTION: If the burner and/or pilot has been burning, the logs and refractory will be hot and will continue to hold heat. Use the appropriate protection to avoid burns and place them on a properly protected surface upon removal to avoid damage to flooring or personal property.

1. **Turn the black control knob to the 'OFF' position**
2. **Shut off the gas supply at the manual shut-off valve.**
3. **Disconnect gas line flex tube from the manual shut-off valve.**
4. **Disconnect any wall switch, remote control or thermostat wires from the top & bottom terminals on the gas valve.**
5. **Remove the upper grill and glass assembly. Refer to the instructions in this manual if necessary.**
6. **Remove the 3 top logs, the 2 center logs, and the back log from the board and set aside on a properly protected surface.**
7. **Remove the log plate by lifting it up and off the tabs (Figure 15A).**
8. **Remove the burner tube by lifting the front up and off the tabs, then slide it to the left, off the burner orifice.**

FIGURE 15A

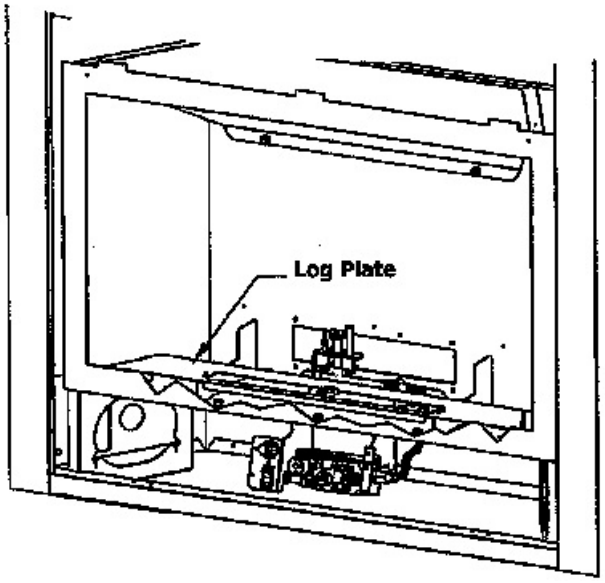

9. **Loosen and remove the (6) nuts securing the board (Figure 15B).**
10. **Carefully lift the board up off the (6) mounting studs and remove from the fireplace.**

FIGURE 15B

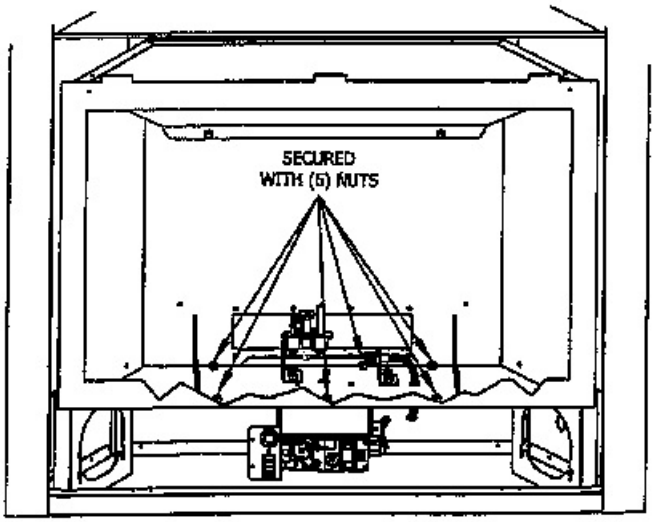

INSTALLING THE BOARD:

NOTE: The millivolt board is fitted with a gasket to seal the millivolt board. Make certain this gasket is properly placed around the opening before installing the regulator board. If the gasket is damaged a replacement one must be used.

1. Grasp the board with both hands and place into the unit, aligning the (6) mounting holes in the board to the moutning studs as the bottom of the firebox (Figure 15B).

CAUTION: Before securing the board into place make sure that all of the wires (attached under the board) are clear and unobstructed.

2. Attach the 1/4" nuts (included with the board assembly) and tighten.
3. Install the burner tube by positioning it over the burner orifice and aligning the mounting holes at the sides of the burner tube onto the tabs on the millivolt board.
4. Position the log plate over the top of the front burner tube, aligning it between the tabs on the board (Figure 15A).
5. Connect the flexible gas line to the manual shut-off valve.
6. Reconnect any wall switch, remote control or thermostat wires onto the top and bottom terminals on the gas valve.
7. Replace the logs. (Refer to the diagrams in this manual for proper placement.)
8. Replace the glass assembly and upper grill.
9. Verify proper operation of the fireplace and log position. Refer to the lighting instructions in this manual.

IMPORTANT: CHECK ALL CONNECTIONS WHETHER FIELD OR FACTORY MADE FOR LEAKS!

TROUBLESHOOTING GUIDE

NOTE: The millivolt board includes the following items: Valve, generator, pilot assembly, piezo, electrode, rocker switch, burner, orifice and orifice holder. If any of these items are defective, contact your dealer for the appropriate repair / replacement procedures to follow.

WARNING: DO NOT ATTEMPT TO SERVICE THIS UNIT IF YOU ARE NOT A QUALIFIED INSTALLER OR REPAIRMAN.

1. ***If the unit fails to ignite a qualified service person should check the unit installation.***
2. ***It is imperative that the control compartment, burner and circulation air passageways of the unit be kept clean. This is necessary to provide adequate combustion and ventilation air.***
3. ***All of the working parts of this unit can be removed at one time. Before removing millivolt board, check for loose wires.***

PROBLEM	***CAUSE***	***SOLUTION***
1. No spark when piezo button is depressed	**Piezo wire connection at valve is loose or off.**	**Push wire back into place.**
	Wire from piezo to electrode is loose at electrode.	**Reconnect wire.**
	Electrode moved out of position.	**Realign electrode with 1/8" space between it & the pilot.**
2. Pilot won't light	**Gas shut off.**	**Turn Gas ON.**
	Gas line not purged.	**Hold black control knob in long enough to purge line.**
	Not holding black control knob in long enough.	**Hold in longer.**
	No spark at piezo.	**See problem #1.**
3. Pilot won't stay lit	**Not holding black control knob in long enough.**	**Hold button in longer to heat thermocouple.**
	Thermocouple connection loose at valve connection.	**Check connection on valve and tighten if necessary.**
	Pilot hood misdirecting pilot flame from thermocouple.	**Check pilot flame location. Flame must be burning on generator and thermocouple.**
	Refractory panels not positioned against firebox back & sides.	**Secure refractory panels with high-temp sealant, especially around the intake duct.**

4. Burner won't light	**Pilot not lit**	**Relight pilot**
	Regulator valve not turned “ON”.	**Turn valve to "ON"**
	Rocker switch not turned “ON”.	**Press bottom of switch.**
	Rocker switch wires not connected.	**Check that wiring is connected.**
	Generator wires loose at regulator terminals	**Reposition wire and tighten screws. See diagram below for wiring instructions.**
	Generator wire grounded out due to pinching of wires	**Nuts securing millivolt board may need loosening to remove pinched wire.**
	Generator is not producing enough millivolts to operate burner.	**Replace generator.**
	Wall switch, remote control or thermostat not connected properly or turned to wrong setting.	**Connect properly or disconnect and use on/off switch only.**
5. Burner won't stay lit	**Generator wires loose on terminals.**	**Reposition wires and tighten screws**
	Generator wire grounded out due to pinched wires.	**Nuts securing millivolt board may need loosening to remove pinched wire.**
	Generator is not producing enough millivolts to sustain burner operation.	**Check millivolt reading, replace generator if necessary.**
	Refractory panels not positioned against firebox.	**Secure refractory panels with high-temp sealant, especially around the intake duct.**

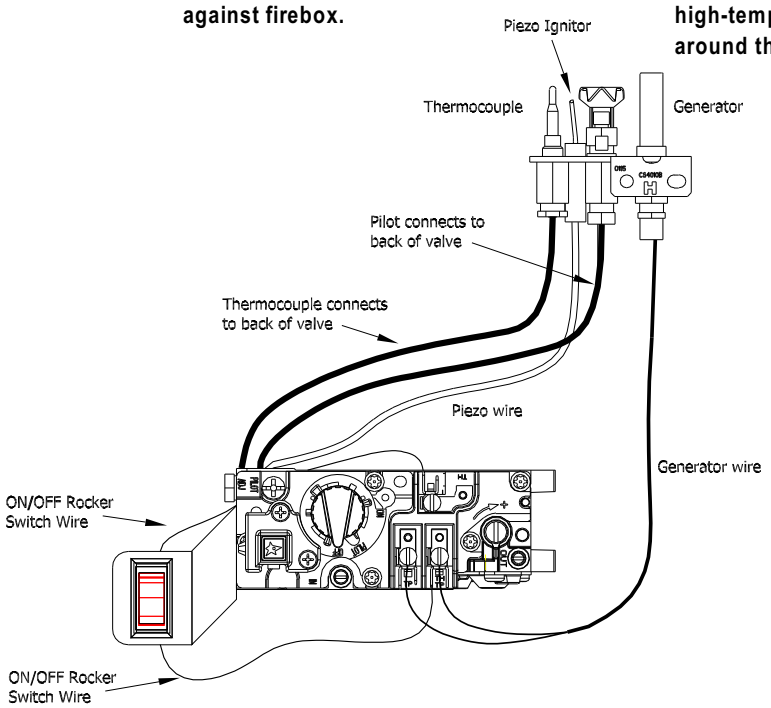

FIGURE 16

ATTENTION HOMEOWNER / INSTALLER:

BLUE FLAMES AND/OR LOW FLAMES:	***1. SLIGHTLY CLOSING THE VENTURI SHUTTER MAY BE NECESSARY IF FLAMES ARE BLUE. THIS IS LOCATED AT THE END OF THE BURNER TUBE WHERE IS IT POSITIONED OVER THE ORIFICE. LOOSEN SET SCREW AND ADJUST. RE-TIGHTEN SET SCREW.***
	2. SLIGHTLY ADJUSTING LOG POSITIONS MAY BE NECESSARY TO ACHIEVE OPTIMUM GLOW & FLAME APPEARANCE.

REPLACEMENT PARTS

Replacement parts are available through your local dealer. Contact them for availability and pricing.

MILIIVOLT BOARD AND PARTS

WDM-800	Millivolt Board - Natural Gas
WDM-801	Millivolt Board - LP Gas
700-023	On/Off Rocker Switch
700-057	Honeywell valve- Natural Gas
700-057-1	Honeywell valve - LP Gas
700-059	Thermocouple
700-060	Flexible Pilot Tubing (Valve to Pilot)
700-063	Pilot/Generator/Thermocouple - Natural Gas
700-063-1	Pilot/Generator/Thermocouple - LP Gas
700-083	Piezo Ignitor w/ wire
700-092	Millivolt Generator
700-203	Manual Shut off Valve
700-213B	18" Flexible Gas Line - Black
700-224	3/8" Flexible Gas Line - Valve to Burner connection
700-242	Natural Gas orifice #42
700-255	LP Gas orifice #55
700-075	Natural Gas conversion cap
700-076	LP Gas conversion cap
OCK-H42	Natural Gas Conversion Kit
OCK-H55	LP Gas Conversion Kit
OKA-035	Burner tube

FAN - REPLACEMENT ONLY

WDM-028	Fan Kit with Temperature limit switch
404-4	Limit Switch Assembly
600085	Speed Control

REMOTE CONTROLS / THERMOSTAT

796-2	Remote Control with thermostat
797-1	Remote Control
700-038	Wall-mount Thermostat

GLASS & GLASS GASKET

700-07T	17" x 30" Glass with gasket
500-404	1 1/8" Glass gasket w/ adhesive

LOG SET & REFRACTORY PANELS

WDM-50A	Log Set
WDM-900A	3 pc. refractory panel set

UPPER GRILLS

936-200	Black Upper Grill
936-20B	Brass Upper Grill
936-20C	Chrome Accent Upper Grill
301-120	Chrome Upper Grill
VF-200	Brass Accent Upper Grill

LOWER GRILLS

936-201	Black Lower Grill
936-21B	Brass Lower Grill
936-201C	Chrome Accent Lower Grill
302-120	Chrome Lower Grill
VF-201	Brass Accent Lower Grill

MISC.

617	44" Lintel Iron

VALANCE / VALANCE TRIM

936-005	Arched Valance (no glass)
936-REC	Rectangular Valance (no glass)
500-936	Brass Trim - Arched Valance only
500-936C	Chrome Trim - Arched Valance only

This appliance tested & certified by:

OMNI-Test Laboratories, Inc.
5465 SW Western Avenue
Beaverton, Oregon 97075

Manufactured by:

Hussong Mfg. Co., Inc
204 Industrial Park Drive
Lakefield, MN 56150

#56101 ' WINDOM' - Direct Vent Gas Fireplace

KOZY HEAT
LIMITED 10 YEAR WARRANTY

Effective July 01, 2003

This Limited 10 Year Warranty will not become effective until the warranty registration form has been completed and mailed to Hussong Manufacturing Co., Inc., P.O. Box 577, Lakefield, MN 56150. This registration form must be received within 30 days of installation. Failure to do so may result in delayed warranty coverage and submission of proof of purchase will be required.

Hussong Manufacturing Co., Inc. warranties to the original purchaser of this Kozy Heat Fireplace, that it is free of defects in materials and workmanship at the time of manufacture.

Subject to the following conditions & requirements, Hussong Manufacturing Co., Inc. extends the following limited warranty under normal use and service, with respect to the Kozy Heat line of gas burning fireplaces.

YEAR 1: Subject to the conditions & requirements listed below, within the first year from date of purchase, Hussong Manufacturing Co., Inc. shall, at its discretion, replace or repair any such defect in material or workmanship, at Hussong Manufacturing Co., Inc.'s expense, including reasonable labor costs to repair or replace the defective component, if a factory pre-authorization is given for the repair.

YEARS 2 - 10: Subject to the conditions & requirements listed below, beginning with the first day of the second year and continuing through the tenth year, Hussong Manufacturing Co., Inc., will at its discretion, provide repair or replacement parts at current list prices for any defect in material or workmanship of components, including optional components and accessories (if available). Hussong Manufacturing Co., Inc. shall not be responsible for any installation, labor, transportation or other indirect costs.

LIMITATION OF LIABILITY

To make a claim under this warranty, the purchaser must first contact the dealer/installer from whom the fireplace was purchased.

This limited warranty will be void if the fireplace is not installed by a qualified installer and according to the installation instructions. Use of unauthorized components will make this warranty null and void.

This limited warranty also is void if the fireplace is not operated, at all times, according to the operating instructions furnished.

This warranty is limited to defects in material and workmanship. It does not apply to any product that has been subject to negligence, misapplication, improper installation. Remote control warranties are covered by Ambient Technologies, Inc., and are excluded from this Limited Warranty.

No person is authorized to extend the time of this warranty or to accept on Hussong Manufacturing Co., Inc.'s behalf any additional obligation of liability connected with the unit.

It is expressly agreed and understood that this warranty is Hussong Manufacturing Co., Inc.'s sole obligation and purchaser's exclusive remedy for defective fireplace equipment. Hussong Manufacturing Co., Inc. shall not be liable for any consequential, incidental or contingent damages whatsoever. The foregoing warranty is exclusive and in lieu of all other expressed warranties. Hussong Manufacturing Co., Inc. shall not be held to implied warranties, including but not limited to the implied warranties or merchantability and fitness for a particular purpose. This warranty replaces all previous warranty policies.

Some states do not allow the exclusion or limitation of incidental or consequential damages or limitations on how long an implied warranty lasts, so the above limitations or exclusions may not apply to you. This warranty gives you specific legal rights and you may also have other rights which vary from state to state.

Hussong Manufacturing Co., Inc. reserves the right to make changes at any time, without notice, in design, material, specifications and prices. Hussong Manufacturing Co., Inc. reserves the right to discontinue models and products.

WARRANTY CONDITIONS & REQUIREMENTS:

1. You are the original purchaser. This warranty is not transferable.
2. Installation of the fireplace is performed by a qualified installer.
3. Installation and operation must comply with installation and operation instructions.
4. Paint and glass gaskets are covered for 30 days from date of purchase.
5. Components broken, (including glass panels), during shipping, careless handling of components, or defects resulting from improper installation, misuse of the fireplace and components are not covered under this warranty.
6. This warranty does not cover any part of the fireplace or any components which have been exposed to or submerged under water.
7. Hussong Manufacturing Co., Inc. must be notified by the dealer the fireplace was purchased from or a qualified installer or service technician of the defect.
8. Annual service of the fireplace as required in the installation manual, is performed by a qualified installer/service technician. (Copies of such service records may be required to claim a warranty.)
9. All previous warranty/service has been performed by a qualified installer or service technician. (Copies of such service records may be required to claim a warranty.)

KOZY HEAT
FIREPLACES

LIFETIME WARRANTY

THIS LIFETIME WARRANTY COVERAGE WILL BE EXTENDED AS DESCRIBED BELOW PROVIDED ALL WARRANTY CONDITIONS AND REQUIREMENTS ARE MET AS OUTLINED IN THE 10 YEAR LIMITED WARRANTY POLICY.

LIFETIME WARRANTY COVERAGE

LIFETIME WARRANTY IS EXTENDED AS FOLLOWS: Hussong Manufacturing warranties to the original purchaser that the firebox, heat exchanger, fiber logs, burner tube and glass of this Kozy Heat fireplace will not be defective in material or workmanship under normal use and service for as long as you own this product. If any of these components fail due to defects in material or workmanship under normal use and service, Hussong Manufacturing Co., Inc. will, at its sole discretion, repair or replace the defective component. This LIFETIME WARRANTY does not cover any installation, labor, transportation or other indirect costs arising from defective components.

LIMITATION OF LIABILITY

This Lifetime warranty will be void if the fireplace is not installed by a qualified installer and according to the installation instructions. Use of unauthorized components will make this warranty null and void. This lifetime warranty also is void if the fireplace is not operated, at all times, according to the operating instructions furnished. This warranty is limited to defects in material and workmanship of components specified. It does not apply to any product that has been subject to negligence, misapplication, improper installation.

No person is authorized to extend the time of this Lifetime warranty or to accept on Hussong Manufacturing Co., Inc.'s behalf any additional obligation of liability connected with the unit.

Hussong Manufacturing Co., Inc. may fully discharge all obligations with respect to this Lifetime warranty by refunding the wholesale price of the defective component(s).

It is expressly agreed and understood that this Lifetime warranty is Hussong Manufacturing Co., Inc.'s sole obligation and original purchaser's exclusive remedy for defective fireplace equipment. Hussong Manufacturing Co., Inc. shall not be liable for any consequential, incidental or contingent damages whatsoever other than those incurred by Hussong Manufacturing Co., Inc. to repair or replace the defective component. The foregoing warranty is exclusive and in lieu of all other expressed warranties. Hussong Manufacturing Co., Inc. shall not be held to implied warranties, including but not limited to the implied warranties or merchantability and fitness for a particular purpose. This lifetime warranty replaces all previous lifetime warranty policies.

Hussong Manufacturing Co., Inc. reserves the right to make changes at any time, without notice, in design, material, specifications and prices. Hussong Manufacturing Co., Inc. reserves the right to discontinue models and products.

_____ JUNE 1998

(CUT ALONG DOTTED LINE)

TO ACTIVATE THIS LIFETIME WARRANTY COVERAGE, THIS REGISTRATION CARD MUST BE COMPLETED AND MAILED WITH YOUR COMPLETED 10 YEAR LIMITED WARRANTY FORM WITHIN 30 DAYS OF INSTALLATION.

PURCHASER'S NAME: _____ **INSTALLATION DATE:** _____

ADDRESS: _____ **MODEL#** _____ **SERIAL #:** _____

_____

_____ **TELEPHONE #** _____

INSTALLER NAME: _____

ADDRESS: _____ **TELEPHONE #** _____

_____