KOZY HEAT™

INSTALLATION & OPERATING MANUAL

MODEL:
SP-36: SLIM PROFILE 36"
DIRECT VENT GAS FIREPLACE

US Patent Number 5,931,154
US Patent Number 6,004,493

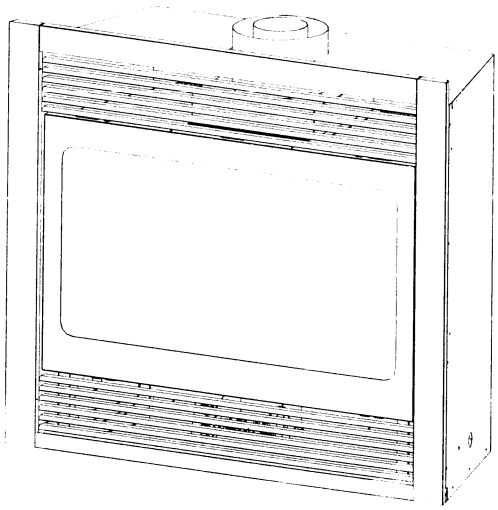

IMPORTANT:
READ INSTRUCTIONS CAREFULLY BEFORE INSTALLATION. FAILURE TO INSTALL THIS FIREPLACE CORRECTLY CAN CAUSE SERIOUS STRUCTURAL AND FIRE HAZARDS AND MAY VOID YOUR WARRANTY.

Warnock Hersey
WH® US

www.kozyheat.com

May 2003

INDEX

IMPORTANT:

READ THIS MANUAL BEFORE INSTALLING AND USING THIS FIREPLACE

MODEL SP-36 DV GAS FIREPLACE HEATER INSTALLATION INSTRUCTIONS

This appliance has been tested to and complies with ANSI Z21.88-1988●CSA 2.33-M98, "VENTED GAS FIREPLACE HEATER". Installation must conform with local building codes, or, in the absence of local building codes, with the national fuel gas code, ANSI Z223.1 NFPA 54, Current Edition, or the Manufactured Home Construction and Safety Standard, Title 24 CFR, Part 3280.

This appliance may be installed in an aftermarket permanently located, manufactured (mobile) home, where not prohibited by local codes. This appliance is only for use with the type(s) of gas indicated on the rating plate. This appliance is not convertible for use with other gases, unless a certified kit is used.

INSTALLATION AND/OR REPAIR OF THIS UNIT SHOULD ONLY BE DONE BY A QUALIFIED INSTALLER .

WARING: This Product Must Be Installed By a Licensed Plumber Or Gas Fitter When Installed Within The Commonwealth of Massachusetts.

WARNING: If the information in this manual is not followed exactly, a fire or explosion may result causing property damage, personal injury or loss of life.

FOR YOUR SAFETY:
WHAT TO DO IF YOU SMELL GAS:

- **Do not touch any electrical switches.**
- **Do not try to light any appliance.**
- **Do not use the phone in your building.**
- **Immediately call your gas supplier from a neighbor's phone.**
- **Follow the gas suppliers instructions.**
- **If you cannot reach your gas supplier, call the fire department.**
- **Do not store or use gasoline or other flammable vapors and liquids in the vicinity of this or any other appliance.**

WARNING

Improper installation, adjustment, alteration, service or maintenance can cause injury or property damage. Refer to this manual. For assistance or additional information consult a qualified installer, service agency, or the gas supplier.

WARNING: Do not use this heater if any part has been under water. Immediately call a qualified service technician to inspect the appliance and to replace any part of the control system and any gas control which has been under water.

WARNING: DO NOT REPLACE THIS BURNER UNIT WITH ANY OTHER SIZED BURNER. REPLACEMENT WITH AN UNAUTHORIZED BURNER CAN RESULT IN TEMPERATURES EXCEEDING THE LIMITS FOR THIS UNIT, AND VOID YOUR WARRANTY.

UNIT SPECIFICATIONS -

Height :	**32"**
Front width:	**36"**
Back width:	**27 7/8"**
Depth:	**15"**
Flue size:	**4" exhaust, 7" intake**

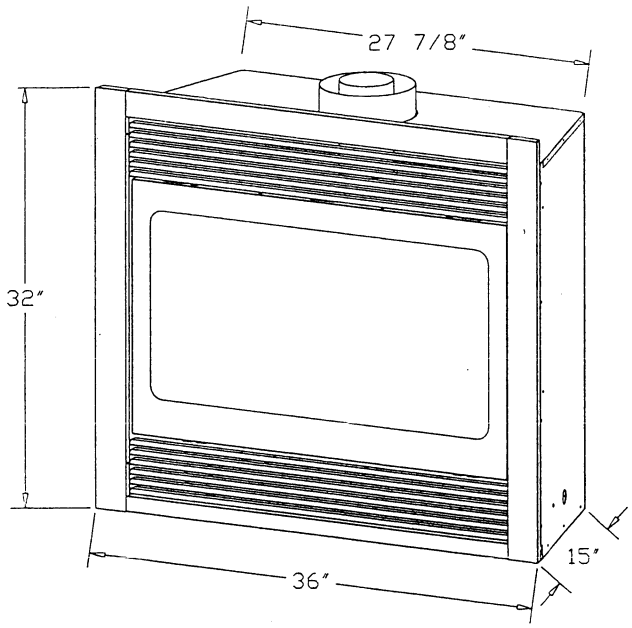

IMPORTANT: NON-COMBUSTIBLE FACING MATERIAL MAY BE APPLIED OVER THE FACE - *DO NOT PLACE COMBUSTIBLE MATERIAL OVER THE FACE OF THE FIREPLACE*. TO PREVENT THE FACING MATERIAL FROM CRACKING AND FALLING OFF DUE TO EXPANSION OF THE FACE WHEN HEATED, DO NOT ATTACH FACING MATERIAL DIRECTLY TO THE FACE OF THE UNIT. DO NOT OBSTRUCT THE FLOW OF VENTILATION AIR.

CLEARANCES

Minimum clearance to combustibles:

From unit sides & back:	**0"**
From unit top stand-off:	**0"**
To flooring:	**0"**
From flue vent:	**1"**
From unit glazing to adjacent sidewall:	**8"**
From heat outlet to mantle:	**12"**

Mantel Projection

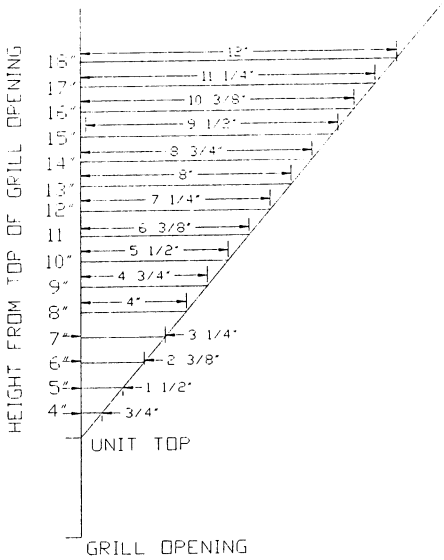

VENTING REQUIREMENTS

APPROVED DIRECT VENT CHIMNEY SYSTEMS:

- **#745 DIRECT VENT TERMINATION KIT** - for terminations 4' or less.

- **#718 DIRECT VENT TERMINATION KIT** - for terminations greater than 4' but less than 8'.

-**#746 DIRECT VENT EXTENSION KIT** - used in conjunction with #745 or #718. The extension kit is expandable to 6'.

The above direct vent kits are typically used for horizontal venting applications.

Refer to pages #4-#6 for venting requirements and complete installation instructions for the above kits.

- **SIMPSON DURA-VENT DV-GS CHIMNEY SYSTEM***:
  Size: 4" x 6 5/8".
  For horizontal & vertical terminations.

- **AMERI-VENT DIRECT VENT CHIMNEY SYSTEM***:
  Size: 4" X 6 5/8".
  For horizontal & vertical terminations.

***Adaptor #923-C is required to adapt the fireplace exhaust and intake collars to the Dura-Vent and Amer-Vent chimney systems.**

Refer to pages #4-#7 for complete venting requirements.

Follow installation instructions included with the #923-C adaptor & installation instructions provided with the chimney system you are using.

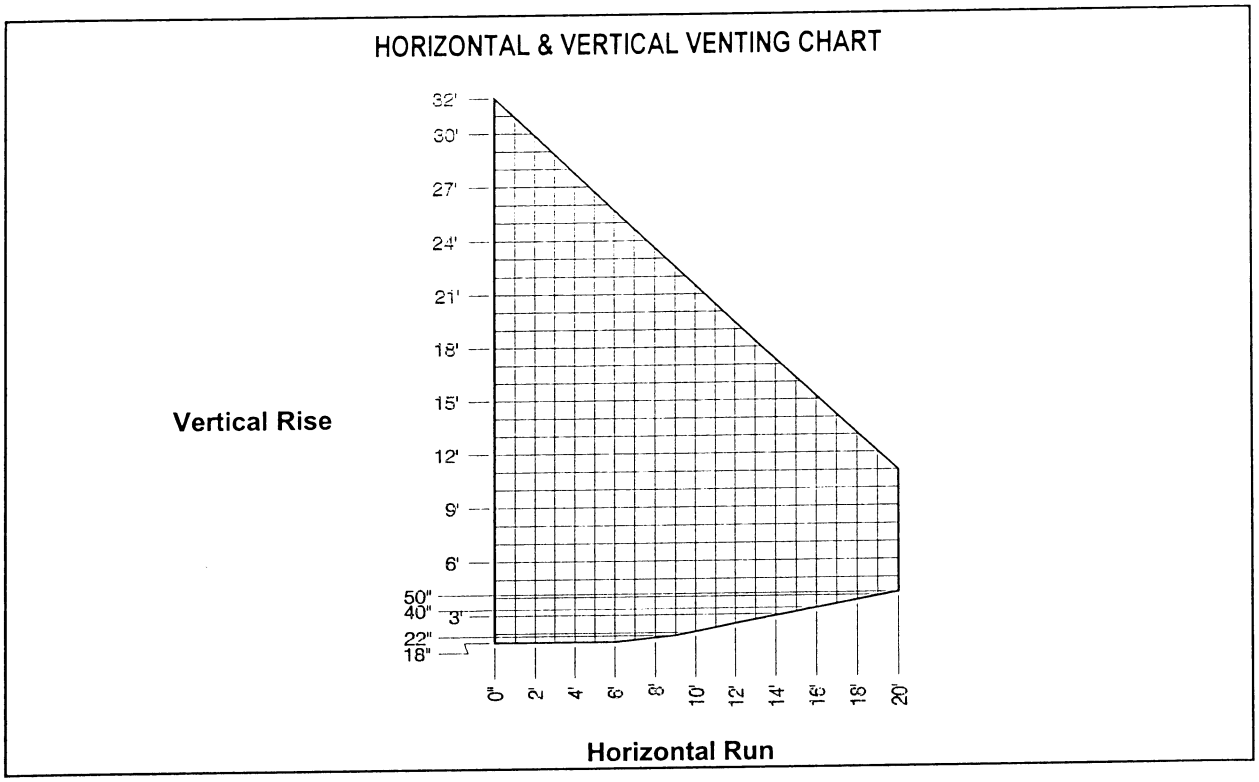

HORIZONTAL VENTING REQUIREMENTS

The following are minimum venting configurations which may be used for direct thru-the-wall installations. This generally will be determined by how the fireplace will be finished on the interior.

1. **SIMPSON DURA-VENT PIPE ONLY MAY BE USED ON THE FOLLOWING CONFIGURATION:**
   #923-C adaptor, followed by a 90° elbow, then a minimum horizontal vent run of 6". A snorkel kit must then be used on the outside of the house to ensure proper draft and compliance to the venting requirements as tested.
   The maximum horizontal run for this configuration is 2' 6". See figure 2A on page 6.

2. **SIMPSON DURA-VENT OR AMERI-VENT PIPE MAY BE USED ON THE FOLLOWING CONFIGURATIONS:**

   A. #923-C adaptor, followed by a 90° elbow, then a minimum/maximum horizontal vent run of 6". This is the only accepted configuration that can be used without a snorkel kit. The vertical and horizontal runs cannot be increased. Refer to figure 2B, page 6.

   B. MINIMUM VERTICAL RISE*: 17" (TO TOP OF INTAKE PIPE) - this is equivalent to (1) 6" chimney section followed by (1) 90° elbow. See figure 2C, page 6. NOTE: #923-C adaptor must be used.

   MINIMUM HORIZONTAL RUN: 6 IN.
   *MAXIMUM HORIZONTAL RUN: 6 FT. (Horizontal runs must maintain 1/4" rise per ft.)

   TOTAL HORIZONTAL & VERTICAL RUN MUST NOT EXCEED 32 FT.

3. **KOZY HEAT #700 SERIES FLEXIBLE DIRECT VENT CHIMNEY SYSTEM:**

   Refer to figure 2D, page 6.

   MINIMUM VERTICAL RISE*: 18" (TO TOP OF INTAKE PIPE)
   MINIMUM HORIZONTAL RUN: 6 IN.
   *MAXIMUM HORIZONTAL RUN: 6 FT. (Horizontal runs must maintain 1/4" rise per ft.)

***Determined by the length of horizontal run. Using the chart above, find the minimum vertical rise required directly off the top of the fireplace for the length of horizontal you need. A 50" vertical rise will allow a 20 ft. horizontal run (w/ 1/4" rise per ft. incline) with no elbows.**

4. **For each additional elbow used after the first elbow, you must subtract 5 ft. from the maximum horizontal run allowed. A maximum of 2 elbows are allowed.**

For example: A vertical rise of 18" directly off the top of the unit with a 90° elbow would be allowed to run 6' with 1/4" rise per ft.. If an additional elbow is used within this vent run, the maximum horizontal run allowed would be 1' with 1/4" rise per ft.. (6 ft - 5 ft. (for additional elbow) = 1 ft.)

TERMINATION VENT CAP LOCATION:

This gas appliance must not be connected to a chimney flue serving another type of appliance.

GENERAL:

1. Terminations against vinyl siding must use a vinyl siding protector. Follow instructions included.

2. **DO NOT RECESS TERMINATION KIT INTO OUTSIDE BUILDING MATERIALS** - i.e.: brick, stone, etc.. If necessary, extend framing so that termination kit will be exposed once building materials are installed.

3. Vent termination must not be located where it will become plugged by snow or other material. The flow of combustion and ventilation air must be not obstructed.

LOCATION CLEARANCES:

- Above grade, veranda, porch, deck, balcony - 12". (A)
- Operable window - 12" (B)
- Permanently closed window - 12" (recommended to prevent condensation on window. (C)
- Ventilated soffit - 24" (D)
- Unventilated soffit - 12" (E)
- Outside / inside corner - 12" (F)
- Meter / Regulator: not to be installed above within 3 ft. horizontally from the center line of the regulator.
- Service regulator vent outlet - 3 ft. radius
- Electrical box - 3 ft. (G) DO NOT INSTALL ABOVE AN ELECTRICAL BOX!Non-mechanical air supply inlet to building - 12"
- Combustion air inlet to any other appliance - 12"
- Mechanical air supply inlet - 6 ft. (H)
- Above furnace exhaust or inlet - 12"
- Above paved side-walk or paved driveway located on public property - 7 ft. * (I)
- Under veranda, porch, deck, or balcony (must be fully opened on a min. of 2 sides) - 12" (J)
- Between two horizontal terminations - 12"
- Between two vertical terminations - 12" (K) - Note: May be the same height.

* A vent cannot be located directly above a side-walk or paved driveway that is located between two single family dwelling and serves both dwellings.

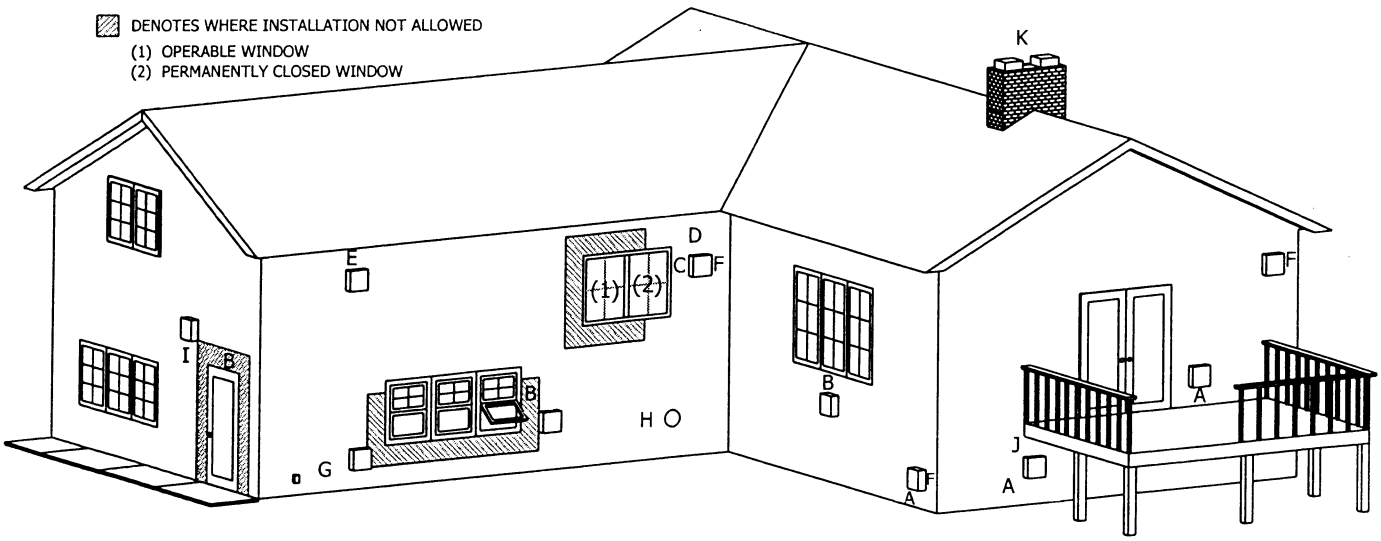

* CHECK LOCAL & STATE BUILDING CODES FOR ADDITIONAL REQUIREMENTS AND/OR RESTRICTIONS.

Figure 1

Minimum Horizontal Venting Configurations

Figure 2A

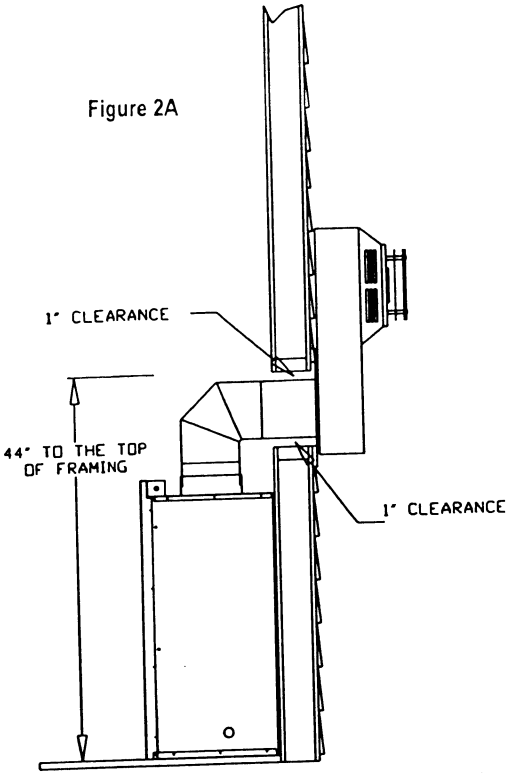

MINIMUM VENTING USING SIMPSON DURA-VENT AND THE #923-C ADAPTOR: (1) 90° ELBOW, FOLLOWED BY A MINIMUM 6" HORIZONTAL VENT RUN AND THEN THE 14" SNORKEL KIT. THE MAXIMUM HORIZONTAL VENT RUN FOR THIS CONFIGURATION: 2 FT. 6 IN..

Figure 2B

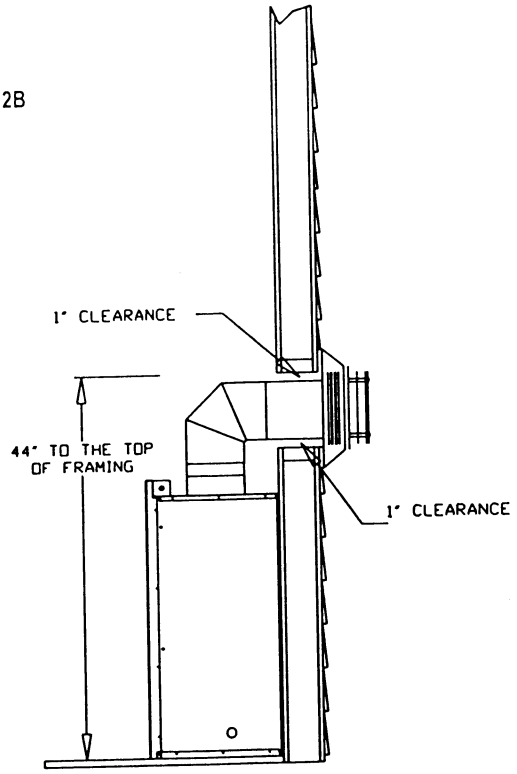

MINIMUM VENTING USING SIMPSON DURA-VENT OR AMERI-VENT CHIMNEY SYSTEMS: #923-C ADAPTOR MUST BE USED. (1) 90° ELBOW FOLLOWED BY A MINIMUM/MAXIMUM HORIZONTAL VENT RUN OF 6". THIS IS THE MAXIMUM HORIZTONAL VENT RUN ALLOWED WITHOUT USING A SNORKEL KIT. DO NOT LENGTHEN VERTICAL OR HORIZONTAL VENT RUNS.

Figure 2C

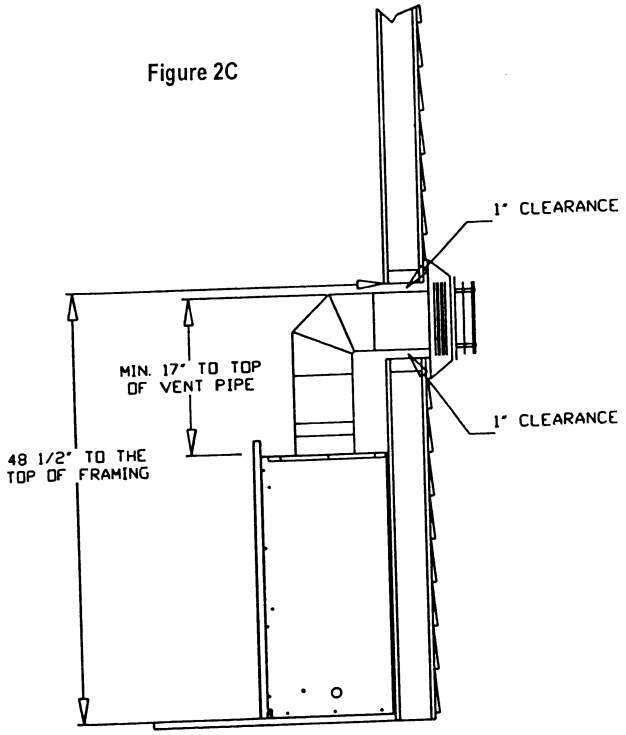

MINIMUM VENTING CONFIGURATION USING SIMPSON DURA-VENT OR AMERI-VENT CHIMNEY SYSTEMS. FOR MINIMUM/MAXIMUM VERTICAL & HORIZONTAL VENTING REQUIREMENTS, REFER TO PAGES 4 AND 5 OF THIS MANUAL.

IMPORTANT: HORIZONTAL RUNS MUST MAINTAIN 1/4" INCLINE PER FOOT OF PIPE.

Figure 2D

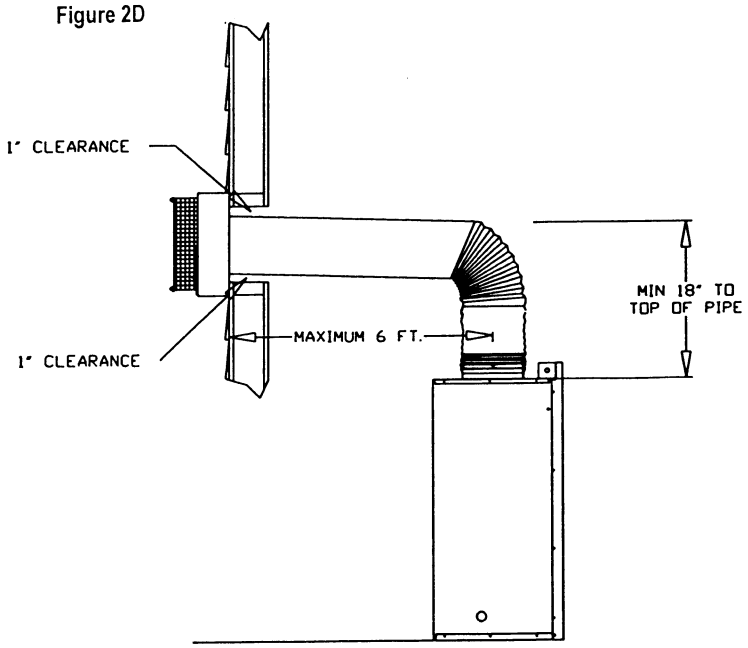

TYPICAL HORIZONTAL TERMINATION USING #700 SERIES FLEXIBLE DIRECT VENT SYSTEM. FOR MINIMUM / MAXIMUM VERTICAL & HORIZONTAL VENTING REQUIREMENTS, REFER TO PAGES 4 AND 5 OF THIS MANUAL.

IMPORTANT: HORIZONTAL RUNS MUST MAINTAIN 1/4" INCLINE PER FOOT OF PIPE.

VERTICAL VENTING REQUIREMENTS

NOTE: MINIMUM VERTICAL RISE FROM TOP OF UNIT BEFORE FIRST ELBOW: 18 IN.
MAXIMUM VERTICAL RISE FROM TOP OF UNIT: 32 FT.
IMPORTANT: A RESTRICTOR IS REQUIRED FOR VERTICAL VENT RUNS OF 14' TO 32' FEET.

ELBOWS: 2 (Dura-Vent & Ameri-Vent chimney)

MINIMUM CLEARANCE TO COMBUSTIBLES: 1"

WHEN VERTICALLY TERMINATING, THE MINIMUM CHIMNEY HEIGHT ABOVE THE ROOF LINE IS DETERMINED BY THE FOLLOWING CHART:

Roof Pitch	Minimum Chimney Height	Roof Pitch	Minimum Chimney Height
Flat to 6/12	1 ft.	13/12 to 16/12	6 ft.
6/12 to 9/12	2 ft.	17/12 to 21/12	8 ft
10/12 to 12/12	4 ft.		

CAUTION: This gas appliance must not be connected to or joined with any chimney flue serving any other appliance.

Figure 3

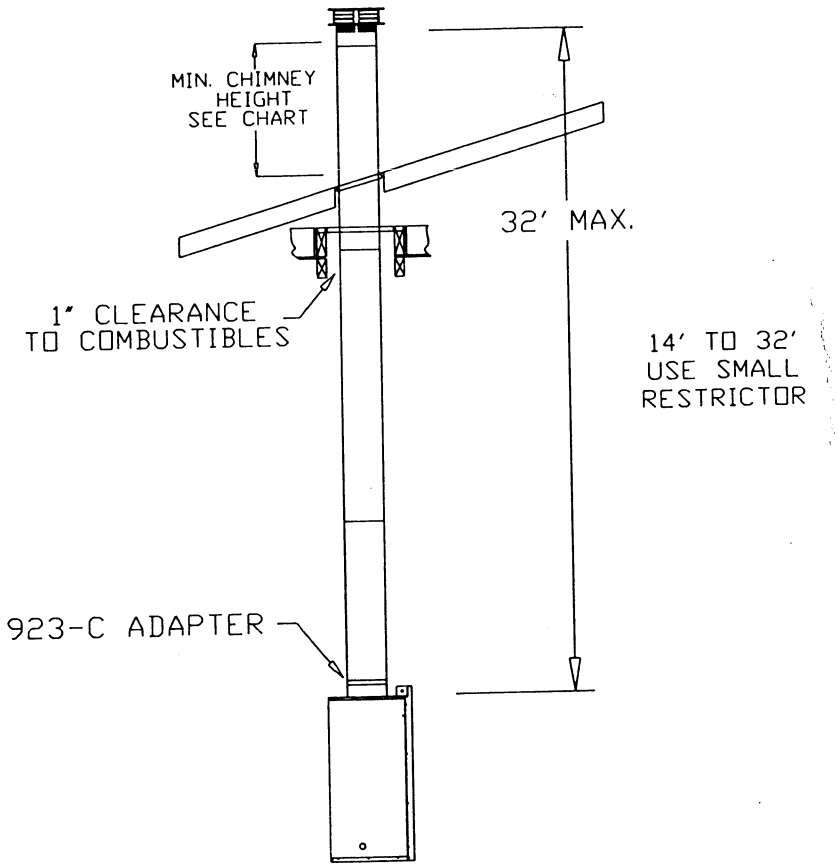

TYPICAL VERTICAL TERMINATION USING SIMPSON DURA-VENT OR AMERI-VENT CHIMNEY SYSTEMS.

(A) POSITION THE UNIT.

1. Determine the exact position of your fireplace. If possible, place the fireplace in such a manner that the piping will be placed between two studs so additional framing is not necessary. Determine the width, depth and height of the (optional) hearth.

   Refer to the figure below for various installation options.

   Maintain proper clearance to combustibles requirements listed on page 3.

Maintain proper clearances of vent system on the exterior when horizontally terminating as outlined on page 5.

CAUTION: COLD AIR TRANSFER AREA. THE SURROUNDING WOOD CHASE OF THE OUTSIDE WALL MUST BE INSULATED TO PREVENT COLD AIR FROM ENTERING THE ROOM.

NOTE: Due to high temperatures, this unit should be located out of traffic areas and away from furniture and draperies.

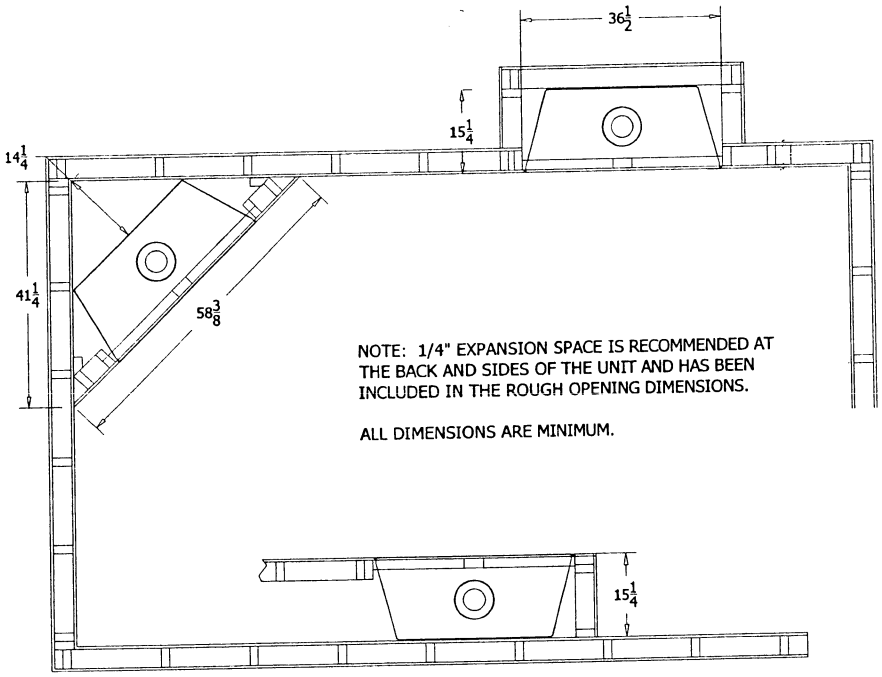

Figure 4

2. HORIZONTAL TERMINATIONS

   Determine the height* & location of where the venting will exit on the exterior.

   ATTENTION: #700 SERIES DV SYSTEMS: THE HEIGHT MUST BE A MINIMUM OF 49 ½" ABOVE THE HEIGHT OF THE FLOOR OR OPTIONAL HEARTH.

   *Important: This measurement is determined by the vertical height and horizontal length of the venting application desired. The measurement is to the *top* of the opening. Please refer to pages #3- #6 of this installation manual for requirements and restrictions

3. **#700 SERIES VENT SYSTEMS:** Cut a 9 1/2" x 9 1/2" hole for the firestop at the location determined . The top of this hole must be a minimum of 49 ½" (A) above the height of the floor or hearth.

The flexible termination kit includes in interior firestop assembly shown in figure 5, which is installed on the inside wall (over wall materials), around the flexible pipe. Slide the firestop over the flex pipe with the spacer legs toward the wall ***PRIOR*** to connecting to the fireplace.

When the wall is complete, secure each corner with a drywall screw. OPTIONAL: Apply a liberal bead of sealant around the outside / wallside edge and place over the 9 1/2" square opening.

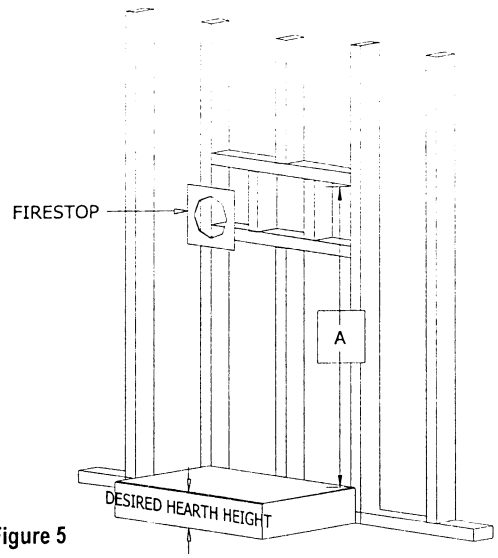

Figure 5

SIMPSON DURA-VENT OR AMERI-VENT CHIMNEY SYSTEMS: REFER TO CHIMNEY INSTALLATION INSTRUCTIONS FOR OPENING SIZE. MINIMUM CLEARANCE IS 1".

4. **Build the hearth to the desired size and height. See notes below.**

5. **Rough in the wall enclosure.** The minimum rough opening dimensions are:

32 1/4" high
36 1/2" wide
15 1/4" deep

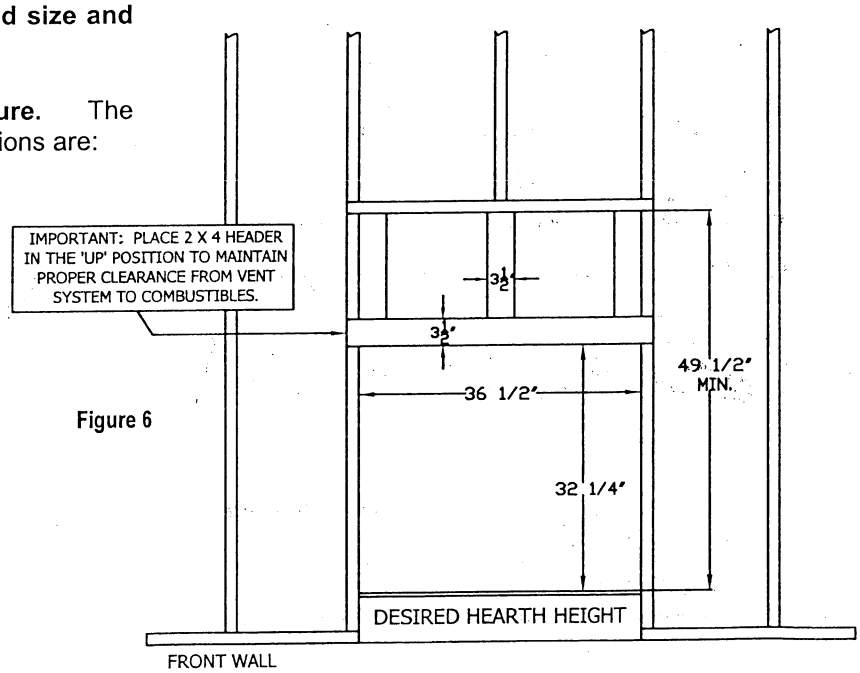

Figure 6

NOTE: When the unit is installed directly on carpeting, tile, or other combustible materials other than wood flooring, it must be installed on a metal or wood panel extending the full width and depth of the unit. The minimum for the support platform under the unit is 15 1/4" deep by 36" wide. If masonry is to be used (optional), prepare the necessary foundation for the masonry load. When masonry construction is being used, a lintel must be used over the top of the unit to support the added weight.

NOTE: A non-combustible hearth extension is not required. If a hearth extension is desired, combustible materials may be used.

NOTE: Provide for a minimum of 6" of clearance in front of the lower grill. This will provide adequate space for opening to open the lower grill and operate the controls. Do not obstruct the upper and lower grill areas to allow proper ventilation air around the unit. Air enters the unit at the lower grill, and exits at the upper grill. Blocking these passages may result in overheating the fireplace creating a potentially hazardous situation.

6. **Place the unit into position.**

(B) REMOVE THE GLASS ASSEMBLY. See Figure 7.

1. Locate the spring-loaded handles securing the glass assembly (under the firebox).
2. Pull the handles out, then down to release the glass assembly.
3. Pull the bottom of the glass assembly out and lift up off the tabs (at the top).
4. Set aside where it will not be broken.
5. Remove the log package from the firebox and set aside.

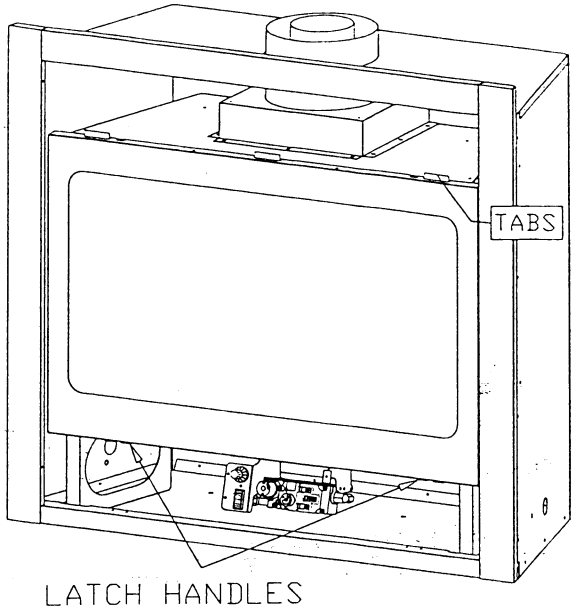

Figure 7

(C) HORIZONTAL & VERTICAL VENTING APPLICATIONS USING THE SIMPSON DURA-VENT OR AMERI-VENT CHIMNEY SYSTEM:

1. INSTALL THE #923-C ADAPTOR FOLLOWING THE INSTRUCTIONS INCLUDED WITH THE ADAPTOR.
2. INSTALL THE CHIMNEY SYSTEM FOLLOWING THE CHIMNEY MANUFACTURERS' INSTRUCTIONS INCLUDED WITH THE CHIMNEY SYSTEM.

   IMPORTANT: IF INSTALLING THE SIMPSON DURA-VENT BRAND CHIMNEY SYSTEM, YOU MUST SEAL ALL JOINTS ON BOTH THE 4" AND 6 5/8" SECTIONS OF THE PIPE. YOU MAY USE THE SEALANT PROVIDED WITH THE #923-C ADAPTOR OR THE EQUIVALENT.
3. WHEN YOU HAVE FINISHED INSTALLING THE CHIMNEY SYSTEM, GO TO PAGE 12 OF THIS MANUAL AND CONTINUE THE FIREPLACE INSTALLATION.

(D) HORIZONTAL VENTING APPLICATIONS USING #700 SERIES DIRECT VENT FLEXIBLE CHIMNEY SYSTEMS.

1. PROCEED WITH THE INSTALLATION INSTRUCTIONS ON THE FOLLOWING PAGE.

(E) INSTALLATION OF THE #700 SERIES HORIZONTAL DIRECT VENT TERMINATION KIT(S)

IMPORTANT: #700 Series vent kits must be supported every 3 ft. to maintain proper rise.

NOTE: THE FLEX PIPE IS PERMANENTLY ATTACHED TO THE EXTERIOR WALL PLATE. DO NOT ATTACH THE #745 OR #718 TERMINATION KIT TO THE STOVE (OR EXTENSION KIT) UNTIL IT HAS PASSED THROUGH THE WALL. THE TERMINATION PLATES SHOULD ALL BE INSTALLED ON THE EXTERIOR OF THE OUTSIDE WALL.

1. If your chimney termination is 8' or less from the stove top and doesn't require an extension kit, proceed to step number 6.

2. If your chimney termination will require one or more extension kits (part #746), proceed with the following steps. Each extension kit contains enough 4" & 7" flexible aluminum pipe to extend the chimney an additional 6'.

3. Using your extension kit pieces, place a bead of sealant outside the 4" flex pipe collar (C) - the end with the EXTERNAL notches - and slide it inside the 4" pipe on top of the stove (D). This is a snap lock connection.

NOTE: The snap lock connection is permanent, you will not be able to remove this pipe once applied without damage.

4. Place a bead of sealant outside the 7" flex pipe collar (E) - the end with the EXTERNAL notches - and slide it inside the 7" pipe on top of the stove (F). This is a snap lock connection.

5. If additional extension kits are being used, repeat steps 3 and 4, placing the 4" & 7" pipes onto the previous extension kit.

Referring to the figure below:

6. Apply a liberal bead of exterior sealant around the outer edge of the termination kit box (A), and, from the outside, place the exterior wall assembly through the 9 ½ " square hole. Place screws through the four slots (B) securing it in place.

NOTE: Attachment brackets are included with the termination kit. These optional brackets should be screwed, or nailed (screws not provided) onto the top and bottom of the 9 ½ " square hole, on the exterior of the house. The termination plates then fit in between these brackets, and using the screws provided, screw the brackets to the termination kit box (A). Attach the vinyl siding protector.

7a. OPTIONAL: Place insulation between the 7" pipe and the wall studs.

7b. The flexible termination kit includes in interior firestop assembly shown in figure 5, page 9, which is installed on the inside wall (over wall materials), around the flexible pipe. Slide the firestop over the flex pipe with the spacer legs toward the wall. OPTIONAL: Apply a liberal bead of sealant around the outside / wallside edge and place over the 9 1/2" square opening.

7c. Secure each corner with a drywall screw. (see figure 5 - page 9.)

8. Gently pull the 4" & 7" flexible aluminum down to the top of the extension kit, or the top of the unit if no extension kits were used.

9. Place a bead of sealant outside the 4" flex pipe collar (C) and slide it inside the 4" pipe on top of the stove (D). This is a snap lock connection.

NOTE: The snap lock is permanent, you will not be able to remove this pipe once applied without damage.

10. Place a bead of sealant outside the 7" flex pipe collar (E) and slide it inside the 7" pipe on top of the stove (F). This is a snap lock connection.

Note: The 18" minimum vertical rise measurement is to the *top* of the 7" pipe.

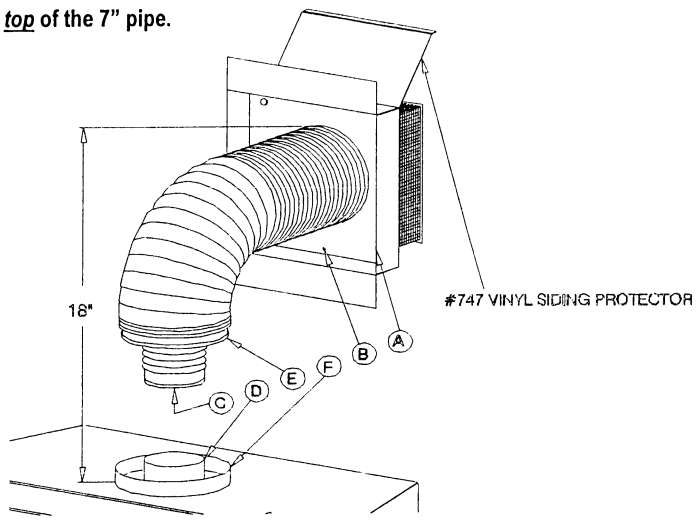

Figure 8

(F) FAN INSTALLATION

INSTALLATION OF THIS FAN SHOULD BE DONE ONLY BY A QUALIFIED INSTALLER

IMPORTANT: IF A FAN IS GOING TO BE INSTALLED, IT MUST BE COMPLETED BEFORE THE MILLIVOLT BOARD IS CONNECTED TO THE GAS LINE.

NOTE: If a fan is going to be installed, the wiring must be done prior to enclosing the sides of the unit. An electrical box, cover and romex connector are included in the fireplace components packet.

This optional fan kit #600-1 includes:

1. **Right and left fan assemblies with fans and temperature control switch already mounted.**
2. **Components Package: Includes speed control with mounting bracket, nut & knob*, (4) nuts, installation instructions.**

***NOTE: You will need to provide a receptacle complete the wiring to the fan.**

To wall-mount the speed control, you will also need to purchase: (1) Electrical box (1) Cover / switch plate

NOTE: Code approved line voltage wiring 16 gauge or better must be used when wiring this system.

WARNING: This appliance is equipped with a three-prong (grounding) plug for protection against shock hazard and should be plugged directly into a properly grounded three-prong receptacle. Do not cut or remove the grounding prong from this plug.

IMPORTANT: BLACK & WHITE SPEED CONTROL WIRES SHOULD BE CONNECTED TO THE INCOMING 'BLACK' ELECTRICAL WIRE. DO NOT CONNECT THE WHITE SPEED CONTROL WIRE TO THE 'NEUTRAL' ELECTRICAL WIRE. THIS WILL RESULT IN PERMANENT DAMAGE TO THE SPEED CONTROL AND IT WILL NEED REPLACING. See wiring diagram below.

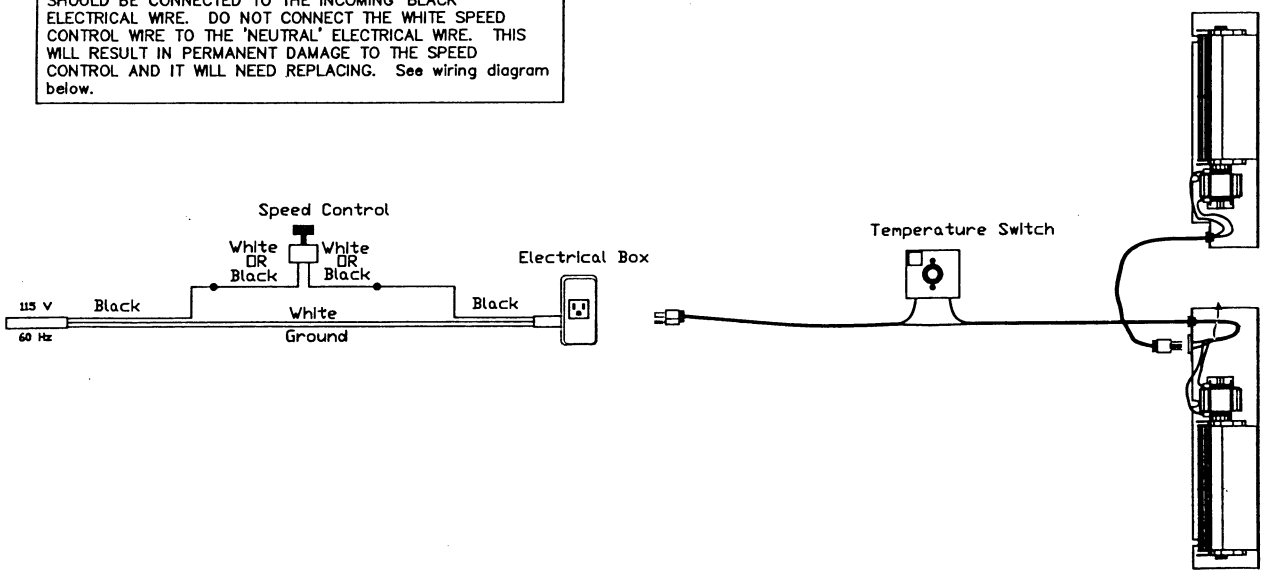

INSTALLATION INSTRUCTIONS. REFER TO THE FIGURE BELOW.

1. Slide the left fan (without receptacle) through the lower grill opening (rt. side of the valve) and place over the (2) left mounting studs located towards the back of the unit.
2. Slide the right fan(with receptacle) through the lower grill opening (rt. side of the valve) and place over the (2) right side mounting studs located towards the back of the unit.
3. Place nuts on mounting studs and tighten.
4. Plug fans together by inserting the three-prong fan cord on the left fan assembly into the receptacle in the right fan assembly.
5. Install an electrical box and mount the speed control on a wall, if desired.
6. Snap the receptacle into the cover
7. Install an electrical box in the side of the unit. Insert 115V wiring (with ground) through a romex connector , install in the electrical box and wire to the receptacle.
8. Place the cover on the electrical box (in the side of the unit) and secure with screws.
9. Place the temperature control switch on the bottom of the unit, as close to the center as possible.
10. Plug cord into receptacle in the electrical box.
11. Turn on/off speed control clockwise until it clicks.

NOTE: The fan will not operate unless the speed control has been turned on. Adjust fan to desired speed while it is running.

NOTE: The fan will not turn 'on' until sufficient heat is applied to the temperature control switch . The fan will turn 'on' and 'off' automatically when the fireplace heats and cools.

NOTE: This system, when installed, must be electrically connected and grounded in accordance with local codes, or in the absence of local codes, with the National Electrical Code, ANSI/NFPA 70-Current edition.

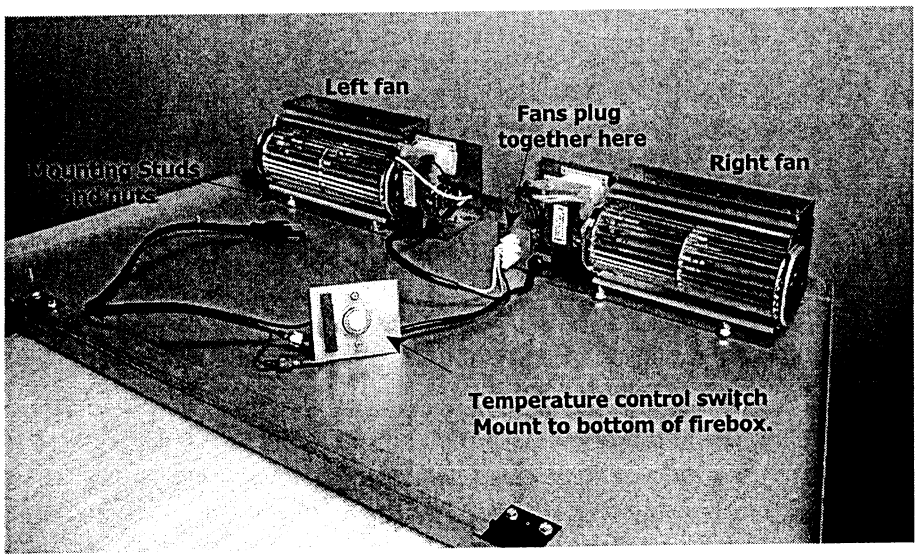

Figure 9

(G) RUN THE GAS LINE.

CAUTION: Installation of the gas line must only be done by a qualified person in accordance with local building codes.

GAS CONVERSIONS

If a gas conversion is necessary, one of the following conversions kits must be used:

Natural Gas Conversion Kit #OCK-332- used to convert an LP millivolt board to natural gas.

LP Gas Conversion Kit OCK-352 - used to convert a Natural Gas millivolt board to LP Gas.

The conversion shall be carried out in accordance with the requirements of the provincial authorities having jurisdiction and in accordance with the requirements of the ANSI Z223.1 installation code.

NOTE: This unit is equipped with a 3/8" x 18" long flexible gas connector and manual shut off valve.

NOTE: The gas line should be run to the point of connection where the shut-off valve and flexible gas line will connect.

CAUTION: The manual shut-off valve or flexible gas tubing must not extend outside of the unit cavity. See the WARNING label affixed to the flexible tubing for additional installation instructions and warnings.

NATURAL GAS:

The minimum inlet gas supply pressure: 7.0 inches W.C. (recommended)
The maximum inlet gas supply pressure: 10.5 inches W.C.
Manifold pressure: 3.5 inches W.C.
Manifold pressure (lo setting): 1.7 inches W.C.

Orifice size: 32 Input: 32,000 BTU's Efficiency: 74% AFUE: 67%

LP GAS:

The minimum inlet gas supply pressure: 11.0 inches W.C. (recommended)
The maximum inlet gas supply pressure: 13.0 inches W.C.
Manifold Pressure: 10.0 inches W.C.
Manifold Pressure (lo setting): 5.4 inches W.C.

Orifice size: 52 Input: 30,000 BTU'S Efficiency: 73% AFUE: 68%

The efficiency rating of this appliance is a product thermal efficiency rating determined under continuous operating conditions and was determined independently of any installed system.

NOTE: *For high altitude installations consult the local gas distributor or the authority having jurisdiction for proper rating methods.*

1. Run the gas line. An accessible shut off valve must be installed up stream from the regulator.

NOTE: Do not run the incoming gas line in a manner that would obstruct the operation of the fan.

2. This unit is designed to accept either a 3/8" or 1/2" gas line approved for gas appliances. Consult local building codes to properly size the gas supply line leading to a 3/8" reduction.

3. A gas line knockout is positioned on either side of the unit for gas line connection.

4. Connect the gas line to the manual shut-off valve.

5. Connect the flexible gas line (installed on the millivolt board valve) to the manual shut off valve.

IMPORTANT:
ALL CONNECTIONS WHETHER FIELD OR FACTORY MADE MUST BE CHECKED FOR LEAKS!

NOTE: The appliance and its individual shutoff valve must be disconnected from the gas supply piping system during any pressure testing of that system at test pressures in excess of ½ psi.

NOTE: The appliance must be isolated from the gas supply piping system by closing its individual manual shutoff valve during any pressure testing of the gas supply piping system at test pressures equal to or less than ½ psi.

Pressure check taps for both the manifold (outgoing) & inlet (incoming) pressures are located in front of the gas valve. The top pressure tap is the manifold pressure and the bottom pressure tap is the incoming pressure. Follow instructions on page #22 for checking these pressures.

(H) SECURE THE MILLVOLT BOARD:

This unit is equipped with the millivolt board & burner / cover assembly already installed. Referring to the 'INSTALLING THE MILLIVOLT BOARD' section on pages 24-25, check to ensure that all (7) nuts securing the millivolt board are in place and properly tightened. Replace burner / cover assembly securing it to the millivolt board bottom with the (2) nuts provided and ensuring the burner tube is properly positioned over the burner orifice.

(I) LOG INSTALLATION.

This log set includes:

(1) JA-Log	(1) N-Log	(1) HB-Log
(1) LA1-Log	(1) BL-Log	(1) AP-Log
(1) C-Log	(1) JC-Log	(1) Embers pkg.

NOTE:

THE 'N', 'LA1' AND 'HB' LOGS HAVE ALIGNMENT HOLES INCORPORATED INTO THE BOTTOM AND SHOULD BE PLACED ONTO THE CORRESPONDING PINS IN THE BURNER COVER. THE 'JA' LOG IS NOTCHED AND SHOULD BE POSITIONED ONTO THE BURNER COVER PLACING THE NOTCHED OUT SECTIONS IN THE LOG TO THE BRACKETS IN THE CENTER OF THE BURNER COVER.

1. Position the 'JA' log onto the center of the burner cover aligning the notches in the bottom of the log to the brackets in the burner cover. Figure 10.

2. Place the 'N', 'LA1' and 'HB' logs into position on the burner cover aligning the holes in the bottom of the logs to the corresponding pins in the burner cover.

3. Place the 'JC' log into position in front of the burner as shown in figure 10.

   Carefully place the burning embers, included with this fireplace, between the 'JA' log and 'JC' log from point 'A' to point 'B' leaving at least 1/4" space between each ember. Refer to figure 10.

4. Align the hole in the bottom of the 'AP' log to the alignment knob protruding from the 'HB' log. Refer to figure 11.

5. Position remaining top logs 'BL' & 'C' onto the previously positioned logs as shown in Figure 11.

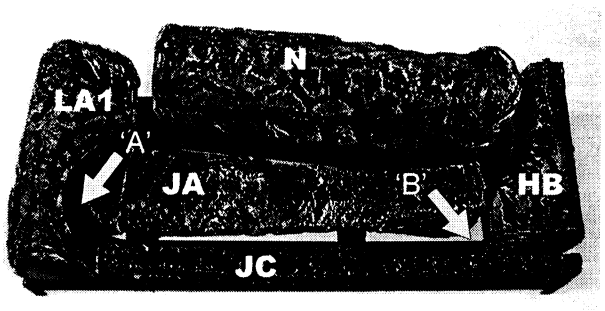

Figure 10

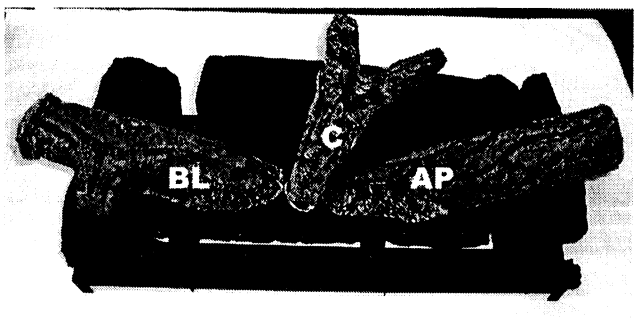

Figure 11

INITIAL BURN PERIOD

Due to the makeup of the logs, the curing process may take up to 4 hours of burn time. During this period, the logs will discolor but will return to their true color once the curing process is complete. Do not burn this fireplace without the glass properly in place.

*****MAKE SURE THE HOMEOWNER IS AWARE OF THIS*****

(J) THERMOSTAT - WALL SWITCH - REMOTE INSTALLATION).

CAUTION: DO NOT connect high voltage (115 V) wire to the switch.

If desired, a thermostat, wall switch <u>or</u> remote control unit may be used to turn the unit off and on. <u>Only one of these may be installed.</u> Follow instructions included with each kit.

OPTIONAL: Disconnect the on/off rocker switch wires from the top & bottom terminals on the gas valve.

NOTE: INSTALLATION OF A THERMOSTAT OR WALL SWITCH SHOULD ONLY BE DONE BY A QUALIFIED INSTALLER

WALL SWITCH / THERMOSTAT USERS:

Run low-voltage (thermostat) wire from the gas valve terminals behind the lower grill to the desired location of the thermostat or wall switch.

Do not run wire more than 30'. NOTE: If too heavy of wire is used or run more than 30', the electricity generated by the unit's generator will not be sufficient to make the regulator work properly.

IMPORTANT: No high voltage (115v) is required to operate any of these systems.

Attach the appropriate connector to each wall switch / thermostat wire and connect to the top and bottom terminals on the gas valve.

Thermostat Wiring Diagram

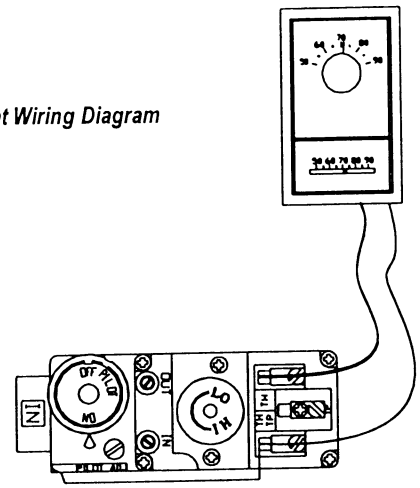

Figure 12

The on/off rocker switch on the millivolt board must be in the 'off' position if any of the above systems are installed on the unit.

If the rocker switch in 'ON', the fireplace burner will operate until it is turned 'OFF' by the rocker switch. A wall switch, thermostat, or remote control willnot turn the fireplace 'OFF' when it has been turned 'ON' by the rocker switch.

Note: The fireplace must be turned 'ON' and 'OFF' by the same method. For example: If the fireplace is turned 'ON' by the remote, it must be turned 'OFF' by the remote.

Remote Control Wiring Diagram

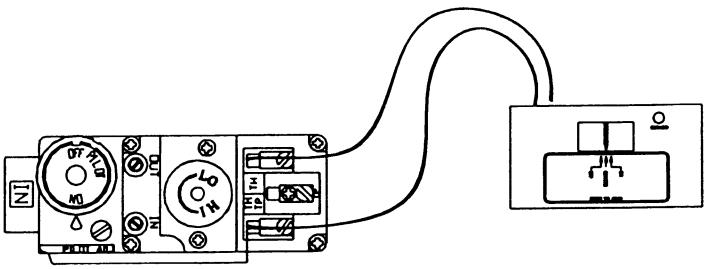

Figure 13

(K) COMPLETE THE INSTALLATION

1. Complete the fireplace walls, and the unit facing.

CAUTION: THE SURROUNDING WOOD CHASE OF THE OUTSIDE WALL MUST BE INSULATED TO PREVENT COLD AIR FROM ENTERING THE ROOM.

2. Seasonal Heat Dump: This fireplace has been designed with an adjustable heat dump outlet located inside the fireplace (at the top). This will allow infinite control over the amount of heat emitted into the living area without affecting the flame height

INSTALLER: PLEASE INSTALL THIS FIREPLACE WITH THE ADJUSTABLE HEAT OUTLET DUMP IN ITS CLOSED POSITION.

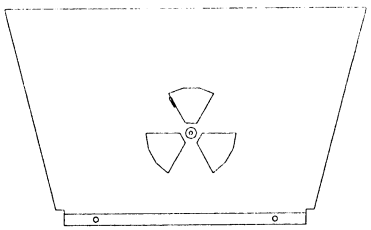

HEAT OUTLET SHOWN IN CLOSED POSITION.

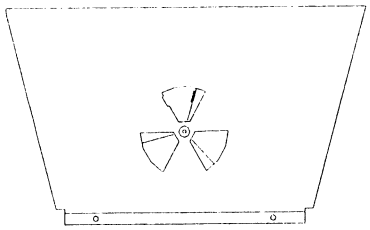

HEAT OUTLET SHOWN IN PARTIAL OPENED POSITION.

CAUTION:	IF THE FIREPLACE HAS BEEN IN OPERATION, ALLOW AMPLE TIME FOR IT TO COOL BEFORE ADJUSTING THE HEAT OUTLET OPENING OR USE THE APPROPRIATE PROTECTION TO PREVENT SERIOUS BURNS.

To adjust the heat outlet opening:
1. Remove the upper grill and glass assembly.
2. Open or close the outlet to desired position.
3. Replace the glass assembly and upper grill.

3. THIS STEP SHOULD ONLY BE DONE BY A QUALIFIED INSTALLER OR SERVICE TECHNICIAN:

   A) Perform lighting and shutdown procedures as described on pages #20-21 . This should be done prior to replacing the glass so that any necessary adjustments can be made and proper operation verified.

4. *Replace the glass. Refer also to Figure 7, pg.10.*

   A) Align the slots in the top of the glass assembly over the tabs on the fireplace.
   B) Place the glass assembly so it is flush with the front of the fireplace front.
   C) Secure the glass assembly to the fireplace by pulling the spring loaded handles down & out, then up over the latch brackets. Release, locking the latches into position.

WARNING: DO NOT OPERATE THIS FIREPLACE WITH THE GLASS ASSEMBLY REMOVED, CRACKED OR BROKEN. Replacement of the glass assembly should be done by a licensed or qualified service person.

5. *Upper Grill - Install:*

A) Line the rods of the grill up with the upper holes.
B) Place the rods in the holes and push up until the bottoms of the rods clear the glass frame.
C) Place the bottom of the rods into the lower holes and release. The grill will set down into place.

Remove:

A) Lift the upper grill up far enough to clear the bottom holes and pull bottom of grill out.

6. *Lower grill - See Figure 14*

Replace:

A) Remove the 1/4" nuts (B) from the lower grill assembly.
B) Slip the bolt through the hinge (A).
C) Re-attach the 1/4" nut (B).
D) Repeat "A" through "C" for the remaining hinge.

The grill is now in place. The grill may be lowered for lighting purposes, etc.

Remove:

A) Remove the 1/4" nuts (B) from the lower grill assembly.
B) Pull the entire grill assembly out of the hinges.
C) Re-attach the 1/4" nuts (B).

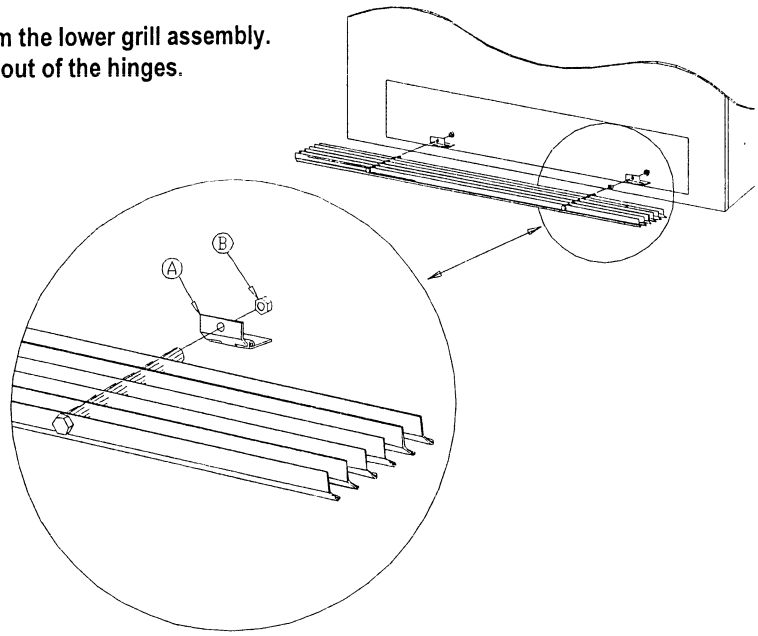

Figure 14

(L) LIGHTING AND SHUTDOWN / PRESSURE TESTING

NOTE: Prior to lighting, check all fittings for leakage. This is accomplished by applying soapy water on all connections made. If there is any leakage, bubbles will appear at the point of connection. If bubbles occur, tighten the fittings until the bubbles no longer appear.

IMPORTANT: TEST ALL CONNECTIONS WHETHER FIELD OR FACTORY MADE.

NOTE: The appliance and its individual shutoff valve must be disconnected from the gas supply piping system during any pressure testing of that system at test pressures in excess of ½ psi.

NOTE: The appliance must be isolated from the gas supply piping system by closing its individual manual shut off valve during any pressure testing of the gas line at test pressures equal to or less than 1/2 psig (3.5 kPa).

Pressure check taps for the manifold (outgoing) and inlet (incoming) pressures are located in front of the gas valve. The top pressure tap is the manifold pressure and the bottom pressure tap is the incoming pressure. Follow instructions on page #22 for checking these pressures.

NOTE: Read 1-8 before lighting the unit for the first time.

1. Open the lower grill by grasping the center of the top louver, and pull out and down.
2. Set the thermostat, if used, to the lowest setting. (If installed.)
3. Turn off all electric power to the appliance. (Fan)
4. Push in control knob (A) slightly and turn clockwise ↘ to "OFF"'

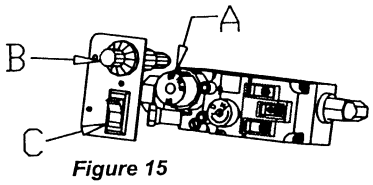

Figure 15

NOTE: Knob cannot be turned from "PILOT" to "OFF" unless knob is pushed in slightly. Do not force.

5. Wait five (5) minutes to clear out any gas. If you then smell gas, STOP! Follow the safety information on page 2 of this installation manual. If you don't smell gas, go to the next step.
6. Find the pilot - follow metal tube from gas control.
   The pilot is located at the back of the firebox behind the burner cover.

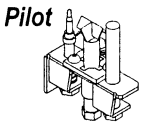

7. Turn the black knob (A) on gas control counterclockwise ↙ to "PILOT".

8. Push in the black control knob all the way and hold in. Press the RED igniter button (B). The pilot will generally light with two or three pushes on the igniter. Hold the knob in for about one (1) minute after the pilot is lit. Release knob and it will pop back out. Pilot should remain lit. If it goes out, repeat steps 4 through 8.

   * If knob does not pop out when released, stop and immediately call your service technician or gas supplier.
   * If the pilot will not stay lit after several tries, turn the gas control knob to "OFF" and call your service technician or gas supplier.

9. Turn gas control knob(A) counterclockwise ↙ to "ON".
10. Depress the ON/OFF switch (C) to the 'ON' position.

    THERMOSTAT USERS: Leave the 'ON/OFF' switch in the 'OFF' position. Set thermostat to desired setting.

    WALL SWITCH: If a wall switch has been installed, leave the 'ON/OFF' switch in the 'OFF' position. Use the wall switch to turn the burner 'ON' and 'OFF"

    IMPORTANT: THE ON/OFF SWITCH MUST BE IN THE 'OFF' POSITION FOR PROPER THERMOSTAT / WALL SWITCH OPERATION.

11. Close the lower grill.

12. Turn on electric power to the fireplace.

NOTE: When the unit is initially lit, condensation will appear on the glass, this is normal in all gas fireplaces, and will disappear in one to three minutes.

TO TURN THE BURNER 'OFF':

13. If you wish to turn the burner 'OFF', open the lower grill to access the gas valve and depress the 'ON/OFF" switch to the 'OFF' position. Close the lower grill.

    If a wall has been installed, simply turn it 'OFF'. If a thermostat has been installed, simply adjust temperature setting. NOTE: The pilot will stay lit.

TO TURN GAS 'OFF' TO APPLIANCE':

1. Open the lower grill by grasping the center of the top louver, then pulll out and down to access the gas control valve.
2. Set the thermostat to the lowest setting (If installed.)
3. Turn off all electric power to the appliance if service work is to be performed.
4. Push in control knob (A) slightly and turn clockwise ↘ to the "OFF" position. DO NOT FORCE.

INITIAL BURN PERIOD

AN ODOR WILL OCCUR DURING THE FIRST FEW HOURS OF BURNING. THIS IS THE PAINT CURING AND SUBSTANCES USED IN THE MANUFACTURING PROCESS. IT IS RECOMMENDED TO LEAVE THE FAN (IF INSTALLED) OFF DURING THIS PERIOD AS THIS WILL SPEED UP THE PAINT CURING PROCESS.

DUE TO THE MAKEUP OF THE LOGS, THEY WILL DISCOLOR DURING THE INITIAL BURN PERIOD. THIS MAY TAKE UP TO 4 HOURS OF BURN TIME. ONCE THE CURING PROCESS IS CIMPLETE, THE TRUE COLOR WILL RETURN. DO NOT BURN THIS FIREPLACE WITHOUT THE GLASS PROPERLY IN PLACE.

****MAKE SURE THE HOMEOWNER IS AWARE OF THIS****

NOTE: THIS FIREPLACE MAY PRODUCE NOISES OF VARYING DEGREE AS IT HEATS AND COOLS DUE TO METAL EXPANSION AND CONTRACTION. THIS IS NORMAL AND DOES NOT AFFECT THE PERFORMANCE OR LONGEVITY OF THE FIREPLACE.

NOTE: Children and adults should be alerted to the hazards of high surface temperature and should stay away to avoid burns or clothing ignition. Young children should be carefully supervised when they are in the same room as the appliance.

Clothing or other flammable material should not be placed on or near the appliance.

PRESSURE TESTING
MANIFOLD & INLET PRESSURE

IMPORTANT NOTICE: A pressure check tap for both the manifold (outgoing) and inlet (incoming) pressure has been incorporated into the gas valve. The top pressure tap is the manifold pressure and the bottom pressure tap measures the incoming pressure. Follow the instructions below for proper pressure testing procedures.

TO CHECK THE MANIFOLD PRESSURE:

1. Light pilot .
2. Loosen the manifold pressure tap [D] by turning the screw counter-clockwise.
3. Attach manometer to pressure tap using a 5/16" I.D. hose [F].
4. Turn black control knob [A] to the 'on' position.
5. Turn the burner on by depressing the rocker switch [C] to expose the 'red' and note manometer reading.
6. Turn the rocker switch [C] to the 'off' position.
7. Disconnect manometer hose and tighten screw (clockwise).
   Screw should be snug, do not over tighten.
8. Attach manometer to manifold pressure tap to verify that it is completely sealed.
   Manometer should read no pressure when the rocker switch is turned on..

NOTE: If manifold pressure reading is within the normal range, an incoming pressure check is not necessary. A too high or too low pressure reading warrants an inlet (incoming) gas pressure check.

TO CHECK THE INLET PRESSURE:

1. Loosen Inlet pressure tap screw [E] by turning screw counter-clockwise.
2. Attach manometer using a 5/16" I.D. hose [F].
3. Light the pilot.
4. Turn the black control knob [A] to the 'on' position. (Burner should not come on) and note manometer reading.
5. Turn the rocker switch [C] to the 'on' position and check the pressure to ensure that it stays near the maximum inlet pressure.
6. Turn the rocker switch [C] to the 'off' position.
7. Turn the pilot to the 'off' position.
8. Disconnect hose and tighten screw (clockwise). Screw should be snug, do not over tighten.
9. Relight pilot and turn the control knob [A] to the 'on' position. Attach manometer to the inlet pressure tap to verify that it is completely sealed. Manometer should read no pressure.

NOTE: If Inlet pressure reading is too high or too low, contact the gas company. Only a qualified gas service technician should adjust the incoming gas pressure.

CAUTION: A LOW PRESSURE READING CAN CAUSE DELAYED IGNITION.

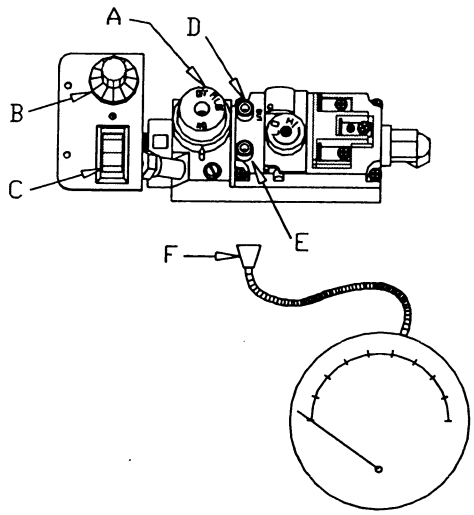

FIGURE 16

(M) MAINTENANCE REQUIREMENTS

1. The appliance should be inspected at least once a year by a professional service person.

NOTE: INSTALLATION AND REPAIR SHOULD BE DONE ONLY BY A QUALIFIED SERVICE PERSON. THE APPLIANCE SHOULD BE INSPECTED BEFORE USE AND AT LEAST ANNUALLY BY A QUALIFIED SERVICE PERSON. MORE FREQUENT CLEANING MAY BE REQUIRED DUE TO EXCESSIVE LINT FROM CARPETING, BEDDING MATERIALS, ETC. IT IS IMPERATIVE THAT CONTROL COMPARTMENTS, BURNERS AND CIRCULATION AIR PASSAGEWAYS OF THE APPLIANCE BE KEPT CLEAN.

2. The compartment below the firebox (behind the lower grill) must be cleaned at least once a year, more frequent cleaning may be required due to excessive lint from carpeting, bedding materials, or other fibrous materials. It is imperative that the burner be cleaned once a year.

FAN
The fan should be disconnected from electrical current, and cleaned (vacuumed) every six months. The bearings are sealed and require no oiling.

VENT SYSTEM
Annual examination of the venting system by a qualified agency is required.

1. Remove the upper grill & glass assembly.
2. For easier access, remove the logs.
3. Cover the millivolt board system.
4. Loosen the nuts securing the baffle at the back of the firebox and remove the baffle.
5. Examine proper sealing of the vent system.
6. Replace the baffle and secure the nuts.
7. Replace the logs, glass and upper grill.

IMPORTANT: ANY SAFETY SCREEN OR GUARD REMOVED FOR SERVICING MUST BE REPLACED PRIOR TO OPERATING THE APPLIANCE

CAUTION: LABEL ALL WIRES PRIOR TO DISCONNECTION WHEN SERVICING CONTROLS. WIRING ERRORS CAN CAUSE IMPROPER AND DANGEROUS OPERATION. VERIFY PROPER OPERATION AFTER SERVICING.

MILLIVOLT BOARD SYSTEM
1. Annual cleaning of the burner is required. The burner tube / cover may be removed for easier access.
2. Remove the logs.
3. Remove the burner tube / cover by loosening the two nuts securing it to the millivolt board. See page 24.
4. Visually check for blocked port holes, especially near the pilot. Blocked port holes may cause delayed ignition.

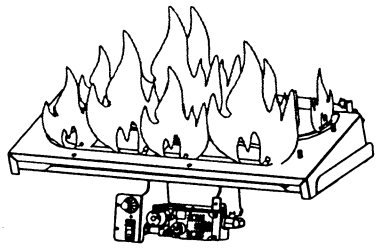

Millivolt board

5. Visually check the pilot and burner flames when they are burning. See Figures above and below. The flames should be steady, not lifting or floating.

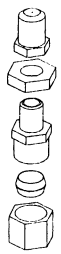

Burner Orifice

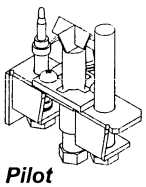

Pilot

GLASS CLEANING & REPLACEMENT
- Clean glass only when cool and only with non-abrasive cleansers.
- *Do not* operate this fireplace with the glass/frame assembly removed, cracked or broken.
- The glass assembly, Part #700-07T, shall only be replaced as a complete unit, as supplied by Hussong Mfg. Co., Inc.
- Replacement of the glass & gasket assembly, Part #700-07T, must only be performed by a licensed or qualified service person. DO NOT SUBSTITUTE MATERIALS.
- *Do not* strike or slam glass door assembly.

CAUTION: KEEP THE APPLIANCE AREA CLEAR OF COMBUSTIBLE MATERIALS, SUCH AS GASOLINE AND OTHER FLAMMABLE VAPORS AND LIQUIDS.

(N) MILLIVOLT BOARD REMOVAL / INSTALLATION

NOTE: The unit is equipped with the millivolt board & burner/cover assembly already in position. The millivolt board and burner cover assembly must be secured in place using the nuts supplied with the fireplace. Follow instructions 'INSTALLING THE BOARD' on page #25 to properly secure the board and burner/cover assembly in place. Follow these procedures should the millivolt board need replacing or is removed for servicing.

MILLIVOLT BOARD REMOVAL.

1. Turn the control knob to 'OFF'.
2. Shut off the gas supply at the manual shut-off valve.
3. Disconnect gas line flex tube from the manual shut-off valve.
4. Disconnect any wall switch, remote control or thermostat wires from the valve.
5. Remove the upper grill, glass assembly and logs.
6. Loosen and remove the (2) 1/4" nuts securing the burner cover and remove the burner cover from the firebox.
7. Remove the burner / cover assembly by lifting the front up and sliding it off the burner orifice.

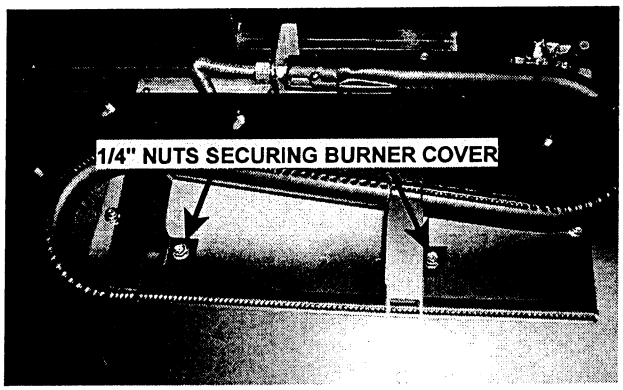

Figure 17

8. Loosen and remove the (7) 1/4" nuts securing the millivolt board and, while grasping the board, gently lift it off the (7) bolts and remove from the unit. Figure 18.

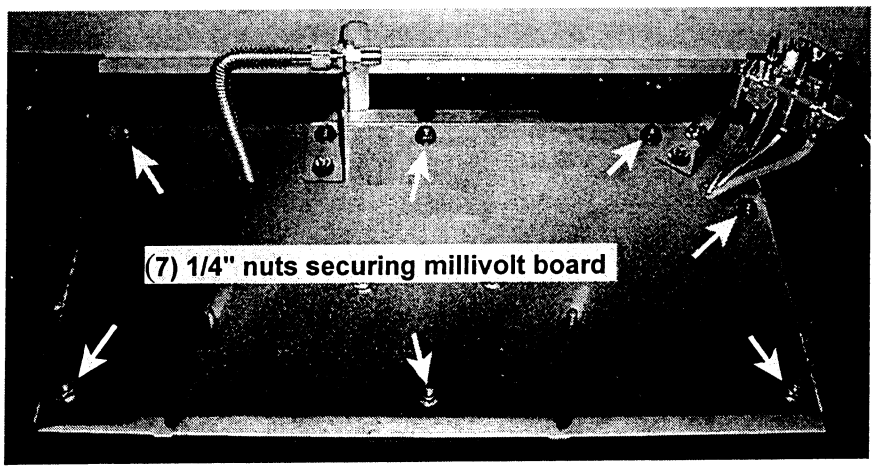

Figure 18

INSTALLING THE BOARD.

NOTE: The millivolt board is fitted with a gasket to seal the millivolt board. Make certain this gasket is properly placed around the opening before installing the millivolt board. If the gasket is damaged a replacement one must be used.

1. Grasp the board with both hands and place into the unit, lining up the (7) 1/4" holes in the millivolt board to the (7) studs on the firebox bottom. Refer to Figure 18.

CAUTION: Before securing the board into place make sure that all of the wires (attached under the board) are clear and unobstructed.

2. Attach the 1/4" nuts (included with the board assembly) and tighten.
3. Replace the burner cover assembly onto the board, aligning the mounting holes in the burner brackets to the mounting studs on the bottom of the millivolt board. Ensure that the burner tube is properly seated over the burner orifice. Refer to Figure 17.
4. Secure with the remaining (2) 1/4" nuts.
5. Connect the flexible gas line to the manual shut-off valve.
6. Reconnect any remote, wall switch or thermostat wires to the valve.
7. Replace the logs as described in section 'I'.
8. Replace the glass assembly and upper grill.

IMPORTANT: CHECK ALL CONNECTIONS WHETHER FIELD OR FACTORY MADE FOR LEAKS.

9. Verify proper ignition, burner operation and log positioning.

(O) TROUBLE SHOOTING GUIDE

NOTE: The millivolt board includes the following items: Valve, generator, pilot assembly, piezo, electrode, rocker switch, burner, orifice and orifice holder. If any of these items are defective, contact your dealer for the appropriate repair / replacement procedures to follow.

WARNING: DO NOT ATTEMPT TO SERVICE THIS UNIT IF YOU ARE NOT A QUALIFIED INSTALLER OR REPAIRMAN.

1. If the unit fails to ignite a qualified service person should check the unit installation.
2. It is imperative that the control compartment, burner and circulation air passageways of the unit be kept clean. This is necessary to provide adequate combustion and ventilation air.
3. All of the working parts of this unit can be removed at one time. Before removing millivolt board, check for loose wires.

PROBLEM	CAUSE	SOLUTION
No spark when piezo button is depressed	The nut which holds the piezo in place is loose	Tighten nut.
	Wire on back of piezo button is loose or off	Put wire back into place.
	Wire from piezo to electrode is loose at electrode	Reconnect wire.
	Electrode moved out of position	Realign electrode with 1/8" space between it & the pilot.
Pilot won't light	Gas shut off	Turn Gas On
	Gas line not purged	Hold black control knob in long enough to purge line.
	Not holding black control knob in long enough.	Hold in longer
Pilot won't stay lit	Not holding black control knob in long enough.	Hold button in longer to heat thermocouple.
	Thermocouple wire loose at valve connection.	Check connection on valve.
	Pilot hood misdirecting pilot flame from thermocouple.	Check pilot flame location. Flame must be burning on generator and thermocouple.
	Refractory panels not positioned against firebox back sides.	Secure refractory panels with high-temp sealant.

PROBLEM	CAUSE	SOLUTION
Burner won't light	Pilot not lit	Relight pilot
	Regulator valve not turned "ON".	Turn valve to "ON"
	Rocker switch not turned to the "ON" position.	Press bottom of switch
	Rocker switch wire not connected	Check wiring diagram Figure 19 and ensure that all wires are secure.
	Generator wires loose at regulator terminals	Reposition wire and tighten screws. See Figure 19 for wiring instructions.
	Generator wire grounded out due to pinching of wires	Nuts on millivolt board may need loosening to remove pinched wire.
	Wall switch, remote control or thermostat not connected properly or turned to wrong setting. See figure 13.	Connect properly or disconnect and use on/off switch only.
Burner won't stay lit	Wall switch, thermostat wire too thick or run more than 30 ft.	Disconnect wires from valve. If burner stays lit, change location or use on/off switch only.
	Refractory panels not positioned against firebox back sides.	Secure refractory panels with high-temp sealant.

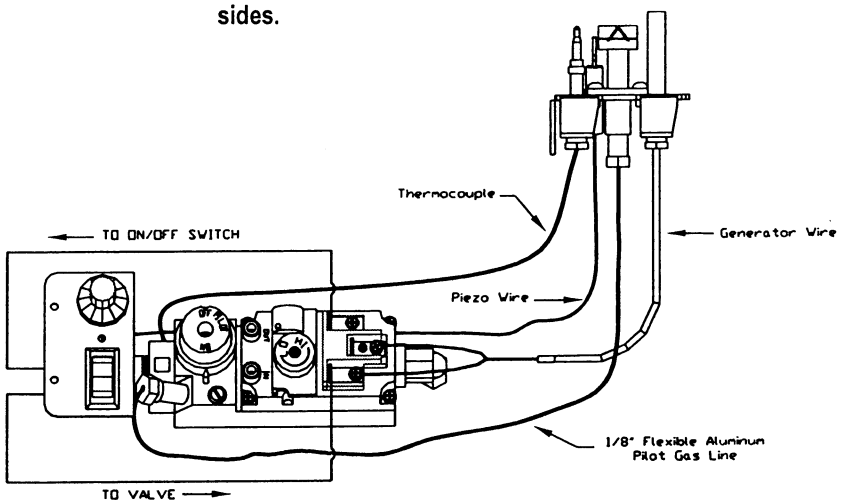

Figure 19

ATTENTION HOMEOWNER / INSTALLER:

BLUE FLAMES AND/OR LOW FLAMES:

1. SLIGHTLY CLOSING THE VENTURI SHUTTER MAY BE NECESSARY IF FLAMES ARE BLUE. THIS IS LOCATED AT THE END OF THE BURNER TUBE WHERE IS IT POSITIONED OVER THE ORIFICE. LOOSEN SET SCREW AND ADJUST. RE-TIGHTEN SET SCREW.

2. SLIGHTLY ADJUSTING LOG POSITIONS MAY BE NECESSARY TO ACHIEVE OPTIMUM GLOW & FLAME APPEARANCE.

REPLACEMENT PARTS

Replacement parts are available through your local dealer. Contact them for availability and pricing.

MILIIVOLT BOARD AND PARTS

SP-400A	SP36 Millivolt Board - Natural Gas
SP-401A	SP36 Millivolt Board - LP Gas
700-032	Piezo Ignitor
700-033	On/Off Toggle Switch
700-036	Millivolt Generator
700-039	Hi/Lo Adjustable regulator (Natural Gas)
700-040	Hi/Lo Adjustable regulator (LP Gas)
700-059	Thermocouple (30-second)
700-060	Pilot Tube with fitting (valve to pilot)
700-203	Manual Shut off Valve
SP-135A	Burner Tube & Cover -
700-213	18" Flexible Gas Line - gas line connection
700-224	3/8" Flexible Gas Line (valve to burner connection)
700-232	Natural Gas orifice - #32
700-252	LP Gas orifice - #52
700-267	Natural Gas Pilot orifice
700-269	LP Gas Pilot orifice
700-055	Pilot/Generator/Thermocouple Assembly-Nat. Gas
700-056	Pilot/Generator/Thermocouple Assembly-LP Gas
OCK-332	Natural Gas Conversion Kit
OCK-352	LP Gas Conversion Kit

FAN - REPLACEMENT ONLY

600-1	Fan Kit with Temperature limit switch & speed control
404-4	Limit Switch Assembly
600085	Speed Control

REMOTE CONTROLS / THERMOSTAT

796-1	Remote Control with thermostat
797-1	Remote Control
700038	Wall-mount Thermostat

GLASS AND BRASS TRIM

SP-005	Replacement glass assembly - includes 17"x30" glass, gasket & frame
700-07T	17" x 30" Glass with gasket
500-404	1 1/8" Glass gasket w/ adhesive

LOG SET & REFRACTORY PANELS

SP-500	Log Set
SP-900	3 pc. refractory panel set

MISC.

617	44" Lintel Iron
936-080	Black Interior Trim
936-081	Black Exterior Trim
936-DOR	Black Screen Doors
936-PDOR	Prairie Design Doors

UPPER GRILLS

936-200	Black Upper Grill
936-20B	Brass Upper Grill
VF-200	Brass Accent Upper Grill

LOWER GRILLS

936-201	Black Lower Grill
936-21B	Brass Lower Grill
VF-201	Brass Accent Lower Grill

GRILL LOUVERS

500-225	Brass louver
500-243	Black louver

VENT SYSTEMS

745	Direct Vent Kit (for terminations up to 4')
718	Direct Vent Kit (for terminations up to 8'
746	Direct Vent Extension Kit (6' long)
747	Vinyl Siding Protector
923-C	Dura-Vent Adaptor
745060	Firestop

KOZY HEAT
LIMITED 10 YEAR WARRANTY

This Limited 10 Year Warranty will not become effective until the warranty registration form has been completed and mailed to Hussong Manufacturing Co., Inc., P.O. Box 577, Lakefield, MN 56150. This registration form must be received within 30 days of installation. Failure to do so may result in delayed warranty coverage and submission of proof of purchase will be required.

Hussong Manufacturing Co., Inc. warranties to the original purchaser of this Kozy Heat Fireplace, that it is free of defects in materials and workmanship at the time of manufacture.

Subject to the following conditions & requirements, Hussong Manufacturing Co., Inc. extends the following limited warranty under normal use and service, with respect to the Kozy Heat line of gas burning fireplaces.

YEAR 1: Subject to the following conditions & requirements listed below, within the first year from date of purchase, Hussong Manufacturing Co., Inc. shall, at its discretion, replace or repair any such defect in material or workmanship, at Hussong Manufacturing Co., Inc.'s expense, including reasonable labor costs to repair or replace the defective component, if a factory pre-authorization is given for the repair.

YEARS 2 - 10: Subject to the following conditions & requirements listed below, beginning with the first day of the second year and continuing through the tenth year, Hussong Manufacturing Co., Inc., will at its discretion, provide repair or replacement parts at current wholesale prices for any defect in material or workmanship of components, including optional components and accessories Hussong Manufacturing Co., Inc. shall not be responsible for any installation, labor, transportation or other indirect costs.

LIMITATION OF LIABILITY

To make a claim under this warranty, the purchaser must first contact the dealer/installer from whom the fireplace was purchased.

This limited warranty will be void if the fireplace is not installed by a qualified installer and according to the installation instructions. Use of unauthorized components will make this warranty null and void.

This limited warranty also is void if the fireplace is not operated, at all times, according to the operating instructions furnished.

This warranty is limited to defects in material and workmanship. It does not apply to any product that has been subject to negligence, misapplication, improper installation. Products made by other manufactures are NOT covered by this Limited Warranty, regardless of whether they were purchase with the fireplace or later added.

No person is authorized to extend the time of this warranty or to accept on Hussong Manufacturing Co., Inc.'s behalf any additional obligation of liability connected with the unit.

It is expressly agreed and understood that this warranty is Hussong Manufacturing Co., Inc.'s sole obligation and purchaser's exclusive remedy for defective fireplace equipment. Hussong Manufacturing Co., Inc. shall not be liable for any consequential, incidental or contingent damages whatsoever. The foregoing warranty is exclusive and in lieu of all other expressed warranties. Hussong Manufacturing Co., Inc. shall not be held to implied warranties, including but not limited to the implied warranties or merchantability and fitness for a particular purpose. This warranty replaces all previous warranty policies.

Some states do not allow the exclusion or limitation of incidental or consequential damages or limitations on how long an implied warranty lasts, so the above limitations or exclusions may not apply to you. This warranty gives you specific legal rights and you may also have other rights which vary from state to state.

Hussong Manufacturing Co., Inc. reserves the right to make changes at any time, without notice, in design, material, specifications and prices. Hussong Manufacturing Co., Inc. reserves the right to discontinue models and products.

WARRANTY CONDITIONS & REQUIREMENTS:

1. You are the original purchaser. This warranty is not transferable.
2. Installation of the fireplace is performed by a qualified installer.
3. Installation and operation must comply with installation and operation instructions.
4. Paint and glass gaskets are covered for 30 days from date of purchase.
5. Components (including glass panels) broken, during shipping, careless handling of components, or defects resulting from improper installation, misuse of the fireplace and components are not covered under this warranty.
6. This warranty does not cover any part of the fireplace or any components which have been exposed to or submerged under water.
7. Hussong Manufacturing Co., Inc. must be notified by the dealer the fireplace was purchased from or a qualified installer or service technician of the defect.
8. Annual service of the fireplace as required in the installation manual, is performed by a qualified installer/service technician. (Copies of such service records may be required to claim a warranty.)
9. All previous warranty/service has been performed by a qualified installer or service technician. (Copies of such service records may be required to claim a warranty.

K O Z Y H E A T

Quality Fireplaces For Life

LIFETIME WARRANTY

THIS LIFETIME WARRANTY COVERAGE WILL BE EXTENDED AS DESCRIBED BELOW PROVIDED ALL WARRANTY CONDITIONS AND REQUIREMENTS ARE MET AS OUTLINED IN THE 10 YEAR LIMITED WARRANTY POLICY.

LIFETIME WARRANTY COVERAGE

LIFETIME WARRANTY IS EXTENDED AS FOLLOWS: Hussong Manufacturing warranties to the original purchaser that the firebox, heat exchanger, fiber logs, burner tube and glass of this Kozy Heat fireplace will not be defective in material or workmanship under normal use and service for as long as you own this product. If any of these components fail due to defects in material or workmanship under normal use and service, Hussong Manufacturing Co., Inc. will, at its sole discretion, repair or replace the defective component. This LIFETIME WARRANTY does not cover any installation, labor, transportation or other indirect costs arising from defective components.

LIMITATION OF LIABILITY

This Lifetime warranty will be void if the fireplace is not installed by a qualified installer and according to the installation instructions. Use of unauthorized components will make this warranty null and void. This lifetime warranty also is void if the fireplace is not operated, at all times, according to the operating instructions furnished. This warranty is limited to defects in material and workmanship of components specified. It does not apply to any product that has been subject to negligence, misapplication, improper installation.

No person is authorized to extend the time of this Lifetime warranty or to accept on Hussong Manufacturing Co., Inc.'s behalf any additional obligation of liability connected with the unit.

Hussong Manufacturing Co., Inc. may fully discharge all obligations with respect to this Lifetime warranty by refunding the wholesale price of the defective component(s).

It is expressly agreed and understood that this Lifetime warranty is Hussong Manufacturing Co., Inc.'s sole obligation and original purchaser's exclusive remedy for defective fireplace equipment. Hussong Manufacturing Co., Inc. shall not be liable for any consequential, incidental or contingent damages whatsoever other than those incurred by Hussong Manufacturing Co., Inc. to repair or replace the defective co mponent. The foregoing warranty is exclusive and in lieu of all other expressed warranties. Hussong Manufacturing Co., Inc. shall not be held to implied warranties, including but not limited to the implied warranties or merchantability and fitness for a particular purpose. This lifetime warranty replaces all previous lifetime warranty policies.

Hussong Manufacturing Co., Inc. reserves the right to make changes at any time, without notice, in design, material, specifications and prices. Hussong Manufacturing Co., Inc. reserves the right to discontinue models and products.

JUNE 1998

(CUT ALONG DOTTED LINE)

TO ACTIVATE THIS LIFETIME WARRANTY COVERAGE, THIS REGISTRATION CARD MUST BE COMPLETED AND MAILED WITH YOUR COMPLETED 10 YEAR LIMITED WARRANTY FORM WITHIN 30 DAYS OF INSTALLATION.

PURCHASER'S NAME: _____ **INSTALLATION DATE:** _____

ADDRESS: _____ **MODEL#:** _____ **SERIAL #:** _____

_____ **TELEPHONE #** _____

INSTALLER NAME: _____

ADDRESS: _____ **TELEPHONE #** _____

_____