KOZY HEAT™

# Models #CMB-31
# #CMB-31-RF

## CAMBRIDGE

Direct Vent Gas Fireplace Insert

INSTALLATION & OPERATING MANUAL

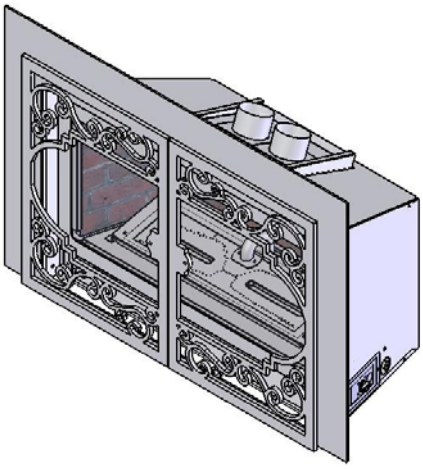

WARNING: If the information in these instructions are not followed exactly, a fire or explosion may result causing property damage, personal injury or loss of life.

Do not store or use gasoline or other flammable vapors and liquids in the vicinity of this or any other appliance.

WHAT TO DO IF YOU SMELL GAS:

- Do not try to light any appliance.
- Do not touch electrical switches; do not use the phone in your building.
- Immediately call your gas supplier from a neighbor's phone. Follow the gas supplier's instructions.
- If you cannot reach your gas supplier, call the fire department.

- Installation and service must be performed by a qualified installer, service agency or the gas supplier.

This appliance may be installed in an aftermarket permanently located, manufactured home (USA only) or mobile home, where not prohibited by local codes. This appliance is only for use with the type(s) of gas indicated on the rating plate. This appliance is convertible for use with other gases, an LP gas conversion kit is included.

IMPORTANT:

**READ ALL INSTRUCTIONS CAREFULLY BEFORE INSTALLATION. FAILURE TO INSTALL THIS FIREPLACE INSERT CORRECTLY CAN CAUSE SERIOUS STRUCTURAL AND FIRE HAZARDS AND MAY VOID YOUR WARRANTY.**

Tested & Listed By O-T L Beaverton Oregon USA
OMNI-Test Laboratories, Inc.

**This fireplace may be covered under one or more of the following U.S. Patents:** #5,931,154 , #6,004,493, #6,029,655

www.kozyheat.com

*April 2006*

**INDEX**

Fireplace Insert Specifications . . . . . 1

Safety Requirements . . . . . 1-2

Requirements of Existing Fireplace . . . . . 2

Fireplace Insert Components . . . . . 3

Preparing The Existing Fireplace . . . . . 4

Gas Line Installation Requirements - Minimum / Maximum Pressures . . . . . 5

Insert Preparation . . . . . 6

- Remove the Glass Assembly . . . . . 6
- Remove the Air Duct . . . . . 6

Fan Installation . . . . . 7-8

- Model #CMB-31 . . . . . 7
- Model #CMB-31-RF . . . . . 8

Installing the Insert . . . . . 9-14

- Co-Linear Vent System . . . . . 9-11
- Position the Insert & Floor Protector . . . . . 11-12
- Secure the Air Duct . . . . . 12
- Complete the gas line installation . . . . . 13
- Check millivolt board installation . . . . . 13
- Complete fan wiring installation (Models #CMB-31 & #CMB-31-RF) . . . . . 14

Assemble & Attach The Shroud . . . . . 15

- Install the lower grill . . . . . 15

Log Installation . . . . . 16

Complete the Installation -
- Initial Lighting . . . . . 17
- Replace the Glass Assembly . . . . . 17

Thermostat - Remote Control - Wall Switch Installation (Model #CMB-31 only) . . . . . 18

Model #CMB-31
- Lighting & Shutdown Procedures . . . . . 19-20
- Manifold (outgoing) & Inlet (incoming) Pressure Check Procedures . . . . . 21

Model #CMB-31-RF
- Lighting & Shutdown Procedures . . . . . 22-23
- Manifold (outgoing) & Inlet (incoming) Pressure Check Procedures . . . . . 24

Maintenance Requirements . . . . . 25

Millivolt Board Removal / Installation Procedures . . . . . 26-27

Troubleshooting Guide . . . . . 28-29

Replacement Parts . . . . . 30

Warranty Policy . . . . . 31-32

# MODEL: #CMB-31 / #CMB-31-RF CAMBRIDGE
# DIRECT VENT GAS FIREPLACE INSERT

## INSTALLATION & OPERATING INSTRUCTIONS

## IMPORTANT:
### READ THIS MANUAL BEFORE INSTALLING AND USING THIS FIREPLACE

This fireplace has been tested to and complies with ANSI Z21.88-2005●CSA 2.33-2005 "VENTED GAS FIREPLACE HEATERS" by OMNI-Test Laboratories, Beaverton, Oregon for U.S. & Canadian Installations. Installation must conform with local building codes or in the absence of local building codes, with the National Fuel Gas code, ANSI Z223.1 NFPA 54 - Current Edition or the Natural or Propane Installation Code, CSA B149-1.

SPECIFICATIONS:
Height (top of firebox): 19 1/4"
Width: 30" Back Width: 23 1/8 " Depth: 14 1/2"

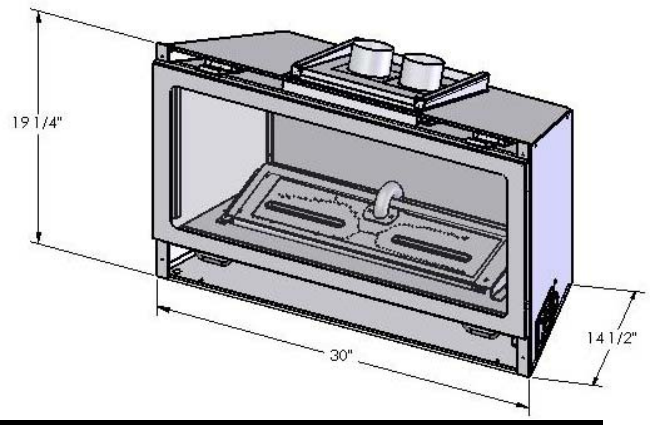


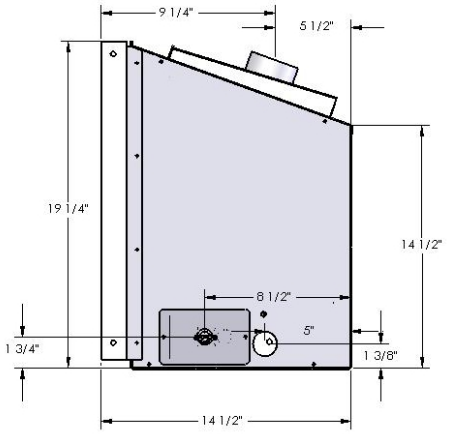


Do not use this fireplace if any part has been under water. Immediately call a qualified service technician to inspect this appliance and to replace any part of the control system and any gas control which has been under water.

COMMONWEALTH OF MASSACHUSETTS INSTALLATIONS

WARNING: This Product Must Be Installed By A Licensed Plumber Or Gas Fitter When Installed Within The Commonwealth of Massachusetts.

IMPORTANT: Installation of a CO detector is required in the fireplace room.

WARNING: DO NOT REPLACE THIS BURNER WITH ANY OTHER SIZED BURNER. REPLACEMENT WITH AN UNAUTHORIZED BURNER CAN RESULT IN TEMPERATURES EXCEEDING THE LIMITS FOR THIS UNIT AND VOID YOUR WARRANTY.

DUE TO HIGH TEMPERATURES, THIS FIREPLACE SHOULD BE LOCATED OUT OF TRAFFIC AND AWAY FROM FURNITURE AND DRAPERIES

Warning: This Product Must be Installed By A Licensed Plumber or Gas Fitter When Installed Within the Commonwealth of Massachusetts

YOUNG CHILDREN SHOULD BE CAREFULLY SUPERVISED WHEN THEY ARE IN THE SAME ROOM AS THIS FIREPLACE.

CHILDREN AND ADULTS SHOULD BE ALERTED TO THE HAZARDS OF HIGH SURFACE TEMPERATURE AND SHOULD STAY AWAY TO AVOID BURNS OR CLOTHING IGNITION.

CLOTHING OR OTHER FLAMMABLE MATERIAL SHOULD NOT BE PLACED ON OR NEAR THE APPLIANCE.

The efficiency rating of this appliance is a product thermal efficiency rating determined under continuous operating conditions and was determined independently of any installed system.

THIS INSERT IS APPROVED FOR INSTALLATION IN MASONRY AND FACTORY-BUILT SOLID FUEL BURNING FIREPLACES.

CAUTION: THIS APPLIANCE MUST NOT BE CONNECTED TO A CHIMNEY FLUE SERVING A SEPARATE SOLID-FUEL BURNING APPLIANCE.

## THE EXISTING FIREPLACE MUST MEET THE FOLLOWING REQUIREMENTS:

1. The existing fireplace & chimney must be in clean and in good working order and constructed of non-combustible materials.
2. A gas line must be able to be installed to the insert.
3. Any chimney clean-outs must fit properly.
4. Existing Chimney:

   Class 'A' metal chimney: 7" minimum inside diameter. Masonry Chimney: 6" x 8" minimum inside diameter.

   Existing chimney height: Minimum: 12 ft.
   Maximum: 30 ft.

   To Determine the length of your existing chimney:

   A) Remove the chimney cap.

   NOTE: It is helpful to have two people complete the next step in determining chimney height:

   B) With one person at the fireplace and the other person at the top of the chimney, measure from the base of the fireplace to the top of the chimney. Subtract 19½" for the height of the insert. This is the total length of co-linear flexible aluminum you will require.

   MEASUREMENT FROM FIREPLACE BASE TO TOP OF CHIMNEY:_____
   LESS 19½" (HEIGHT OF FIREPLACE): -19½"
   TOTAL CHIMNEY LENGTH REQUIRED: _____

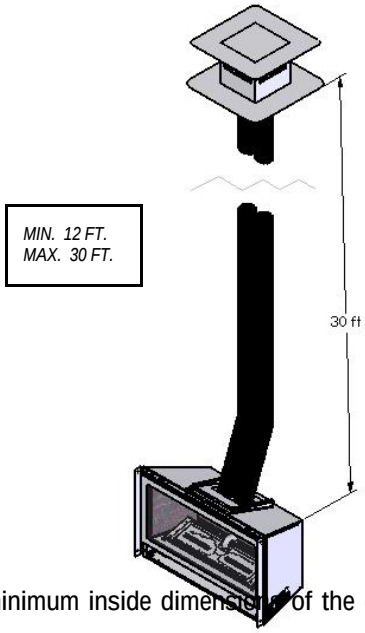


5. The minimum inside dimensions of the existing fireplace must be:

   Height: 19 ½"
   Front Width: 32"
   Depth: 15 ¼"
   Width at minimum depth location: 23 13/16"

MINIMUM OPENING DIMENSIONS

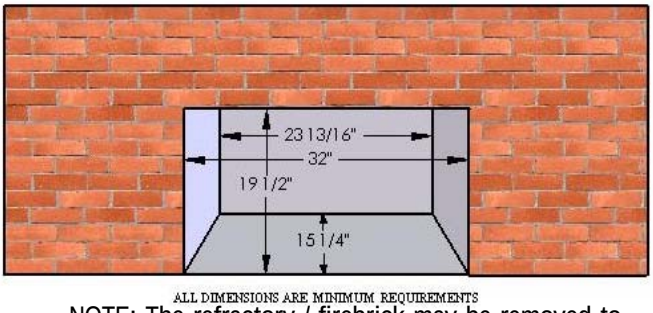


NOTE: The refractory / firebrick may be removed to achieve minimum opening size requirements.

### ZERO CLEARANCE FIREPLACE INSTALLATIONS:

The floor of the existing fireplace may be removed to achieve minimum opening size requirements. If this method is used, the Kozy Heat Floor Protector kit, Part #CMB-FLP, must be installed to protect any combustible flooring exposed.

6. MINIMUM CLEARANCES FROM THE INSERT TO COMBUSTIBLES:

   - Insert side to sidewall: 10"
   - Insert top to 10" mantel: 13"
   - Insert top to 3/4" trim: 8"
   - Bottom of insert to combustible floor in front: 3½"
   - Bottom of insert underneath to combustible floor using insulation shield #CMB-FLP: 0"

## FIREPLACE COMPONENTS:

Check the assembly diagram below to ensure you have all the necessary components to properly install this fireplace insert.

This insert includes the following:

1. Fireplace insert.
2. Spring-loaded latch glass assembly.
3. Millivolt board with burner cover.
4. Co-linear air duct
5. Log set (See page #13)
6. Refractory Panels

Model CMB-31 includes 150 CFM fan with limit switch and speed control.

Model CMB-31-RF includes modulating valve on millivolt board, fan kit and remote control.

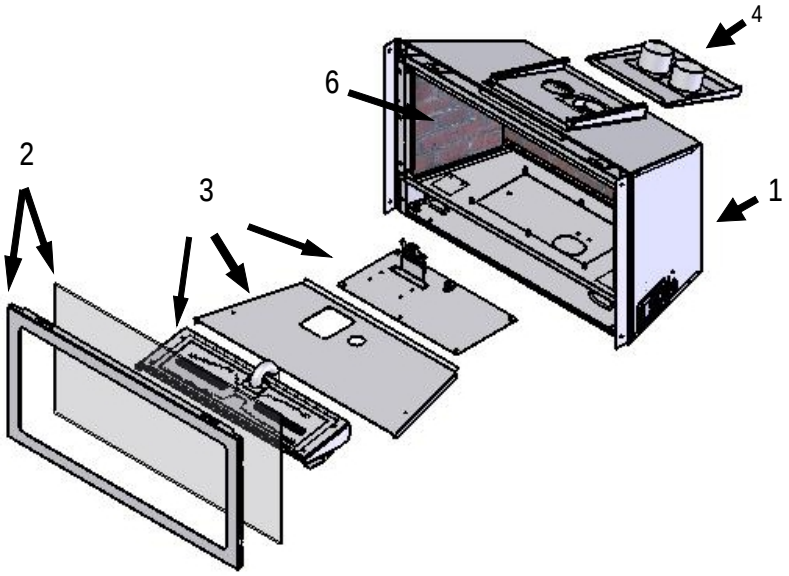


| | |
|---|---|
| **WARNING:** | **Failure to position the parts in accordance with the diagrams in this installation manual or failure to use only parts specifically approved for this appliance may result in property damage or personal injury.** |

**Additional components which are necessary for proper installation are:**

1. **Vent System: Part #816-CL: For use with minimum 6" x 8" I.D. masonry or 8" I.D. Class 'A' metal chimneys - Includes 12 ft. compressed, expandable to 30 ft. co-linear 3" x 3" flexible chimney, and termination cap.**

**This insert is also approved for use with Dura-Vent, Ameri-Vent, & Selkirk Metalbestos 3" x 3" Co-linear vent systems. Refer to the instructions accompanying the vent system as well as the venting requirements and instructions in this manual.**

2. **Shroud - 3 pc & 4 pc.: Standard shrouds are available for this insert and will fit most applications. Custom shrouds may be ordered on a non-returnable basis. When ordering a custom shroud, please specify the existing fireplace front opening height and width. An upper hood and lower grill is included.**

3. **Blank Shrouds - 3 & 4 pc. blank shrouds are available for on-site custom fit applications and are sized to the opening after the insert has been installed. The interior perimeter is properly sized to fit onto the insert. The outer perimeter must be cut, formed and finished (painted). An upper hood and lower grill is included.**

4. **Full door shrouds: Full door decorative shrouds are available for this insert and are used in place of a standard or blank shroud.**

## A) PREPARE THE EXISTING FIREPLACE

| | |
|---|---|
| WARNING: | CUTTING ANY SHEET-METAL PARTS OTHER THAN COMPONENTS LISTED IN THIS SECTION, OF THE EXISTING FIREPLACE, IN WHICH THIS GAS FIREPLACE INSERT IS TO BE INSTALLED, IS PROHIBITED. |

1) **The refractory, glass doors, screen rails, screen mesh and log grates may be removed from the fireplace before installing this gas fireplace insert.**

2) **Any smoke shelves, shields and baffles may be removed if attached by mechanical fasteners.**

3) **If necessary, remove the firebrick on the sides and back of the existing fireplace to obtain at least the minimum opening requirements listed on page #2.**

4) **The fireplace flue damper can be fully blocked open or removed for installation of this gas fireplace insert.**

5) **ZERO CLEARANCE FIREPLACE INSTALLATIONS: The floor of the existing fireplace may be removed to achieve minimum opening size requirements. If this method is used, the Kozy Heat Floor Protector kit, Part #CMB-FLP, must be installed to protect any combustible flooring exposed.**

6) **Remove the existing chimney cap from the chimney.**

7) **Clean the chimney and inside of the fireplace to prevent creosote smell from entering the home.**

8) **Place 'THIS UNIT HAS BEEN MODIFIED' label in the bottom of the firebox so it will be visible if this gas fireplace insert is removed.**

## B. RUN THE GAS LINE

| | |
|---|---|
| **CAUTION:** | **Installation of the gas line must only be done by a qualified person in accordance with local building codes.** |
| **IMPORTANT:** | **DO NOT RUN THE GAS LINE IN A MANNER THAT WOULD OBSTRUCT THE OPERATION OF THE FAN OR FAN COMPONENTS.** |

**This fireplace is equipped with a 3/8" flexible gas line connection 18" long.**

**CAUTION: The manual shut off valve and millivolt board flexible gas line must not extend outside the insert unit cavity. See the WARNING label affixed to the flexible gas line for additional installation instructions and warnings.**

1. **Run the gas line into the fireplace, preferably through the left or right gas line hole provided. A gas line knock-out is also located in the outer bottom of the insert when running the gas line through the bottom.**

   **See Figure B-1 on page #5.**

   **NOTE: If installing this insert into minimum opening dimensions, the gas line may need to be run after the insert is in place due to space limitations.**

   **If installing this gas fireplace insert into a factory-built fireplace and the factory-built fireplace has no access holes(s) provided, an access hole of 1 ½" or less may be drilled through the lower sides or bottom of the firebox in a proper workmanship like manner. This access hole must be plugged with non-combustible insulation after the gas supply line has been installed.**

**IMPORTANT: An accessible shut off valve (included with the unit) must be installed up stream from the regulator.**

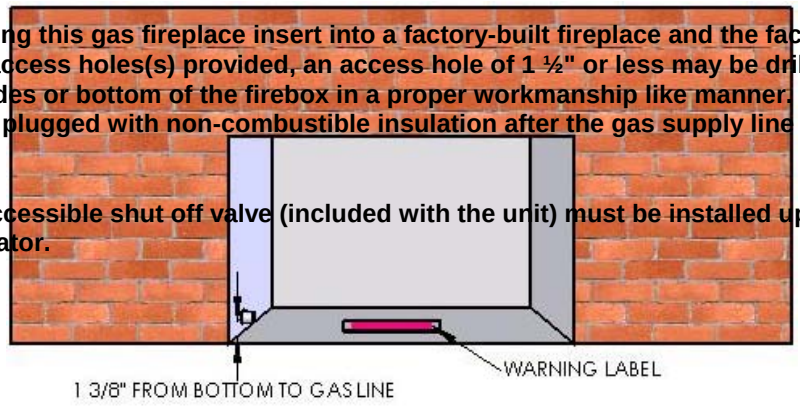

*Figure B-1*

2. **This fireplace is designed to accept either a 3/8" or 1/2" gas line approved for gas appliances. Consult local building codes to properly size the gas supply line leading to a 3/8" reduction.**

3. **Connect the manual shut off valve to the previous run gas line.**

4. **The gas line will be connected to the millivolt board later in this manual.**

IMPORTANT:
ALL CONNECTIONS WHETHER FIELD OR FACTORY MADE MUST BE CHECKED FOR LEAKS.

**NOTE: This appliance and its individual shut off valve must be disconnected from the gas supply piping system during any pressure testing of that system at test pressures in excess of 1/2 psi.**

**NOTE: This appliance must be isolated from the gas supply piping system by closing its individual manual shut off valve during any pressure testing of the gas supply piping systems at test pressures equal to or less than 1/2 psi.**

**Pressure check taps for both the manifold (outgoing) and inlet (incoming) pressures are located in front of the gas valve. The right pressure tap is the manifold pressure and the left pressure tap is the incoming pressure. Follow instructions on page #21 for Model #CMB-31 and page #24 for Model CMB-31RF for checking these pressures.**

GAS SPECIFICATIONS

NATURAL GAS:

The minimum inlet gas supply pressure: 5.0 in. W.C.
Recommended inlet gas supply pressure: 7.0 in. W.C.
The maximum inlet gas supply pressure: 10.5 in. W.C.
Manifold Pressure: 3.5 in. W.C.
Manifold Pressure (lo setting): 1.7 in. W.C.
Orifice size (0-2000 ft): 37 Input rating: 27,500 BTU/Hr.
Minimum Input rating: 19,000 BTU/Hr.
Venturi setting: 1/8" open

LP GAS:

The minimum inlet gas supply pressure: 11.0 in. W.C.
Recommended inlet gas supply pressure: 11.0 in. W.C.
The maximum inlet gas supply pressure: 13.0 in. W.C.
Manifold Pressure: 10.0 in. W.C.
Manifold Pressure (lo setting): 6.5 in. W.C.
Orifice size (0-2000 ft): 52 Input rating: 28,000 BTU/Hr.
Minimum Input rating: 20,400 BTU/Hr.
Venturi setting: 1/2" open

For high altitude installations, consult the local gas distributor or the authority having jurisdiction for proper rating methods.

## C. REMOVE THE FOLLOWING ITEMS FROM THE FIREPLACE INSERT:

### 1. GLASS ASSEMBLY:

*Figure C-1*

A) **Locate the spring-loaded latches securing the glass assembly (under the firebox).**
B) **While holding onto the glass frame, pull the latch handles out, then down to release from the clips on the glass assembly.**
C) **Lift the glass assembly up off the tabs at the top of the firebox.**
D) **Pull the bottom of the glass assembly out and remove.**
E) **Set aside where it will not be broken.**
F) **Remove the log package from inside the firebox and set aside for installation later in this manual.**

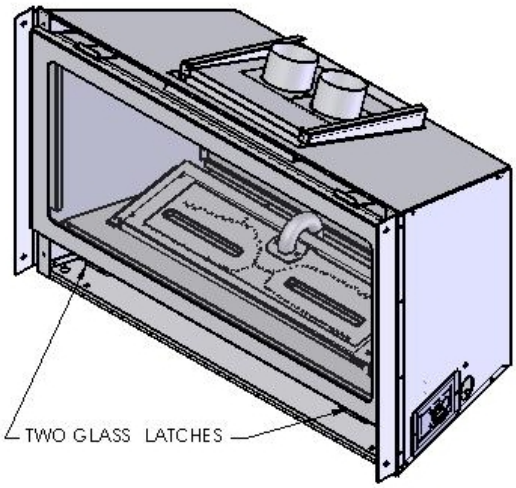


## 2. REMOVE THE AIR DUCT. Figure C-2.

**A. Remove the air duct, located at the top of the insert, by sliding it back out of the channel.**

*Figure C-2*

*Air Duct*

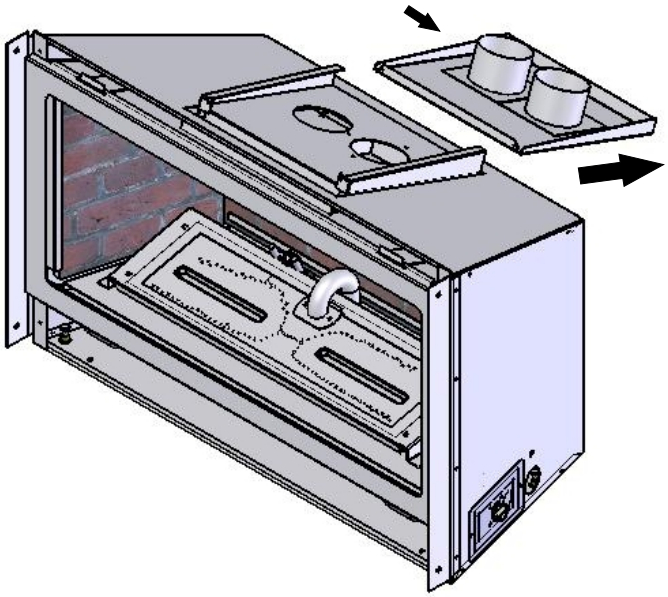

## D. MODEL #CMB-31 ONLY: FAN INSTALLATION INSTRUCTIONS

This fireplace insert comes complete with a fan and temperature control switch assembly already installed. A speed control / receptacle assembly and (3) wire nuts are included in the fireplace components packet for wiring behind the lower air passage. An electrical box and romex connector are pre-installed on a removable panel on the right side of the fireplace. If

wiring to the pre-installed electrical box is desired, the wiring should be run prior to permanently setting the insert in place and connecting the vent system.

NOTE: If this insert is being installed in the minimum opening dimensions, the wiring may need to be completed after the fireplace insert is set in place.

The fan is equipped with a three-prong (grounding) plug attached to the end of the fan electrical cord for protection against shock hazard and should be plugged directly into a properly grounded three-prong receptacle. Do not remove the grounding prong from the plug. Do not allow any excess fan ford to touch the fireplace.

NOTE: Code approved line voltage wiring 14 gauge or better must be used when wiring this assembly. Refer to your local electrical codes for specific requirements in your area.

| | |
|---|---|
| WARNING: | This appliance is equipped with a three-prong (grounding) plug for protection against shock hazard and should be plugged directly into a properly grounded three-prong receptacle. Do not cut or remove the grounding prong from this plug. |

IMPORTANT: INSERT 115V WIRING (WITH GROUND) THROUGH THE ROMEX CONNECTOR AND WIRE TO THE SPEED CONTROL / RECEPTACLE ASSEMBLY MATCHING THE BLACK, WHITE AND GREEN (GROUND) WIRES TO THE CORRESPONDING WIRES ON THE SPEED CONTROL / RECEPTACLE ASSEMBLY. NOTE: 3 WIRE NUTS ARE PROVIDED IN THE FIREPLACE COMPONENTS PACKET.
See wiring diagram below.

*Figure D-1*

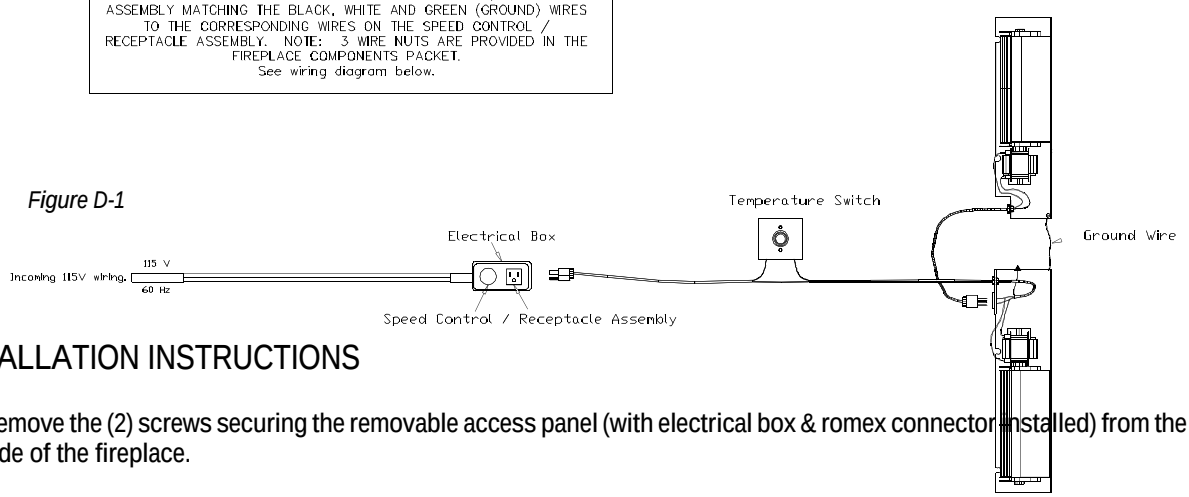


## INSTALLATION INSTRUCTIONS

1. Remove the (2) screws securing the removable access panel (with electrical box & romex connector installed) from the right side of the fireplace.

2. Insert 115V wiring (with ground) through the romex connector and wire to the speed control / receptacle assembly matching the black (hot) white (neutral) and green (ground) wire to the corresponding wire on the speed control / receptacle assembly. NOTE: (3) wire nuts are included in the fireplace components packet.

3. Secure the speed control / receptacle assembly into the electrical box with the (2) screws provided.

*This appliance, when installed, must be electrically grounded in accordance with local codes, or in the absence of local codes, with the National Electrical Code, ANSI/NFPA 70, or the Canadian Electrical Codes, CSA C22.1.*

### MODEL #CMB-31-RF ONLY: FAN INSTALLATION INSTRUCTIONS

INSTALLATION OF THIS FAN WIRING SHOULD BE DONE ONLY BY A QUALIFIED INSTALLER

IMPORTANT: A fan assembly is pre-installed and wired to the RF gas valve in the CMB-31-RF models.

An electrical box & romex connector are pre-installed on a removable panel on the right side of the fireplace. A duplex receptacle and cover is included in the fireplace components packet. If wiring to the pre-installed electrical box is desired, the wiring should be completed prior to permanently setting the insert in place and connecting the vent system.

NOTE: If this insert is being installed in the minimum opening dimensions, the wiring may need to be completed after the fireplace insert is set in place.

NOTE: Code approved line voltage wiring 14 gauge or better must be used when wiring this assembly. Refer to your local electrical codes for specific requirements in your area.

WARNING: This appliance is equipped with a three-prong (grounding) plug for protection against shock hazard and should be plugged directly into a properly grounded three-prong receptacle. Do not cut or remove the grounding prong from this plug.

*Figure D-2*

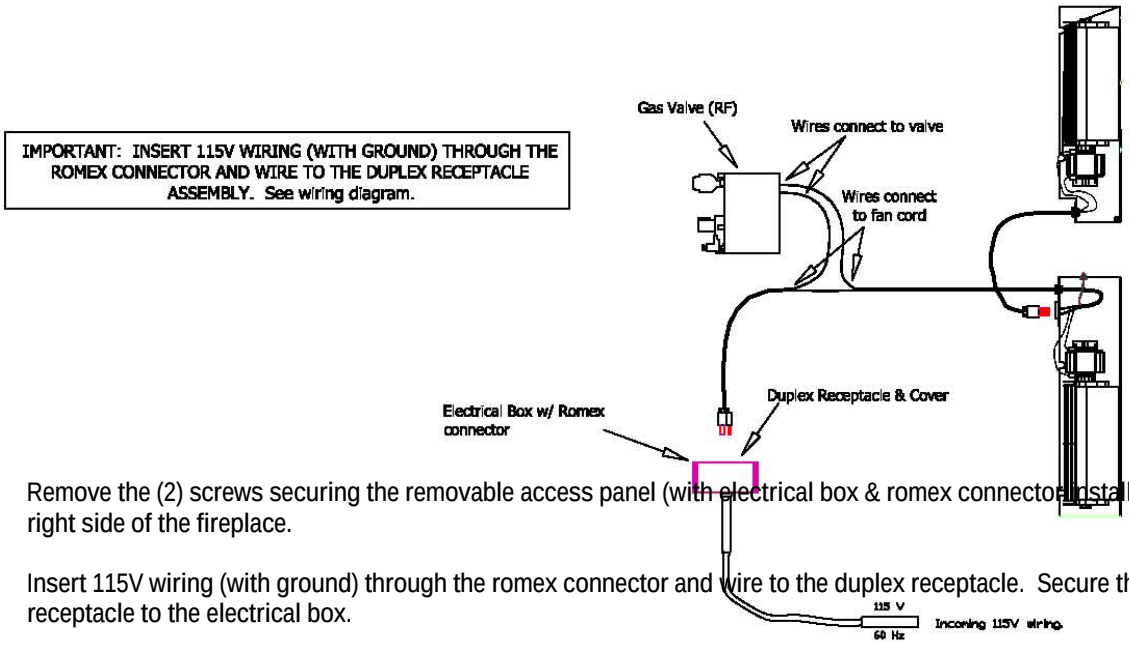


1. Remove the (2) screws securing the removable access panel (with electrical box & romex connector installed) from the right side of the fireplace.

2. Insert 115V wiring (with ground) through the romex connector and wire to the duplex receptacle. Secure the duplex receptacle to the electrical box.

3. Place the cover on the electrical box and secure with screw.

*This appliance, when installed, must be electrically grounded in accordance with local codes, or in the absence of local codes, with the National Electrical Code, ANSI/NFPA 70, or the Canadian Electrical Codes, CSA C22.1.*

## E. INSTALLING THE INSERT

***IMPORTANT: ALL STEPS IN SECTION 'A) PREPARE THE EXISTING FIREPLACE' MUST BE COMPLETED BEFORE CONTINUING WITH THIS INSTALLATION.***

### 1. INSTALL THE VENT SYSTEM

**KOZY HEAT #816-CL CO-LINEAR VENT SYSTEM:**

**The co-linear pipe included in this vent system is designed to extend up to 30 ft.**

**IMPORTANT:** **The 3" exhaust pipe and exhaust collar on the termination cap can be identified by the label attached to each end of the pipe and the label on the collar. It is imperative for proper operation of this insert that the exhaust and combustion air pipes be connected to the correct collar on the termination kit and air duct for the insert.**

**A. Carefully extend the 3" exhaust and combustion intake pipes to equal the total chimney length required.**

**B. 1. Slide the 3" intake pipe (end without the collar) onto the collar on the termination cap and secure with 3 self-tapping screws (provided).**

**2. Place a bead of sealant around the inner edge of the end of the 3" exhaust pipe (with label) without the collar and slide onto the corresponding collar on the termination cap (collar with label). Secure with 3 self-tapping screws (provided). Apply additional sealant around the joint to ensure a seal.**

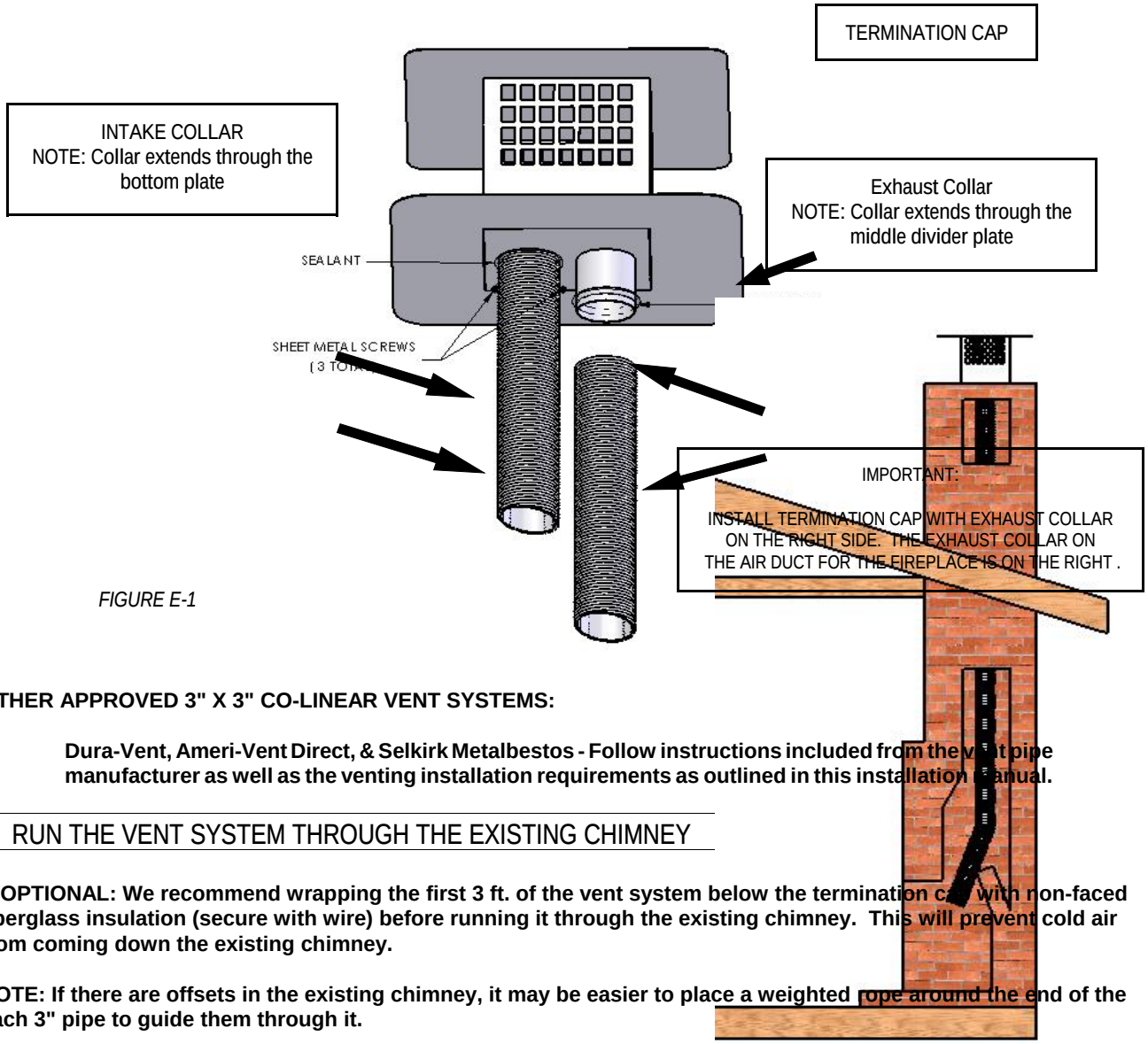


*FIGURE E-1*

**OTHER APPROVED 3" X 3" CO-LINEAR VENT SYSTEMS:**

**Dura-Vent, Ameri-Vent Direct, & Selkirk Metalbestos - Follow instructions included from the vent pipe manufacturer as well as the venting installation requirements as outlined in this installation manual.**

## 2. RUN THE VENT SYSTEM THROUGH THE EXISTING CHIMNEY

**❄ OPTIONAL: We recommend wrapping the first 3 ft. of the vent system below the termination cap with non-faced fiberglass insulation (secure with wire) before running it through the existing chimney. This will prevent cold air from coming down the existing chimney.**

**NOTE: If there are offsets in the existing chimney, it may be easier to place a weighted rope around the end of the each 3" pipe to guide them through it.**

**DO NOT ATTEMPT TO TIE ONE ROPE AROUND BOTH PIPES.**

**A. Guide the rope, if used, and flexible pipes down the existing chimney. Figure E-2**

**B. To secure the chimney termination cap to the existing chimney, apply a liberal bead of sealant (provided) around the top of the existing chimney. Set the termination cap into position as instructed in the vent system installation manual.**

**OPTIONAL: #816-CL kits - Secure the termination cap to the existing chimney with the 2" self-tapping screws and anchor straps provided. Screw holes are located at the sides of the termination cap.**

**C. From inside the opening, grasp the ropes and CAREFULLY pull the ropes until the 3" combustion air intake and 3" exhaust pipes are down into the existing fireplace.**

**❄ OPTIONAL: We recommend placing non-faced fiberglass batting insulation between the pipes and existing chimney to prevent heat loss up the chimney. (See Figure E-3)**

OPTIONAL:
PLACE NON-FACED FIBERGLASS BATTING INSULATION BETWEEN THE PIPES AND EXISTING CHIMNEY TO PREVENT HEAT LOSS UP THE CHIMNEY.

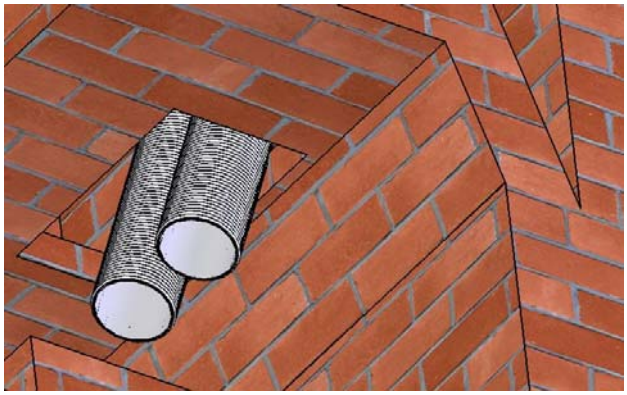

*Figure E-3*

*Figure E-2*

## 3. CONNECT THE VENT SYSTEM TO THE AIR DUCT

**A. Place the air duct into the existing fireplace opening. Figure E-4**

**B. Place a bead of sealant (provided) around the 3" exhaust pipe (with label) and slide it inside the 3" collar marked 'Exhaust' on the duct. Secure with (3) ½" self-tapping screws, provided. Apply additional sealant around the joint to ensure an air tight seal. Figure E-5.**

**C. Apply a liberal bead of sealant (provided) around the 3" collar on the air duct. Slide the 3" combustion intake pipe over the collar and secure with (3) ½" self-tapping screws, provided. To ensure an air-tight seal, apply additional sealant around the joint. Figure E-5.**

*Figure E-4*

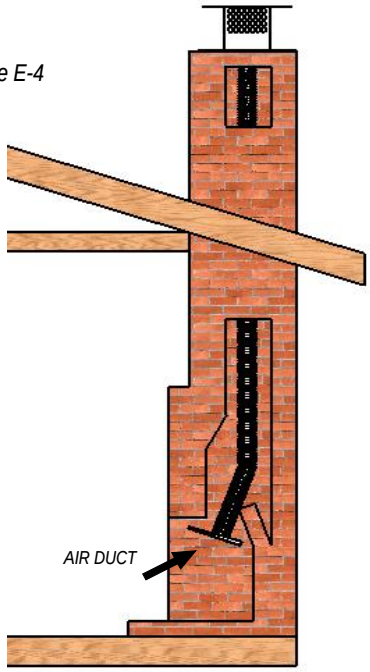


*Figure E-5*

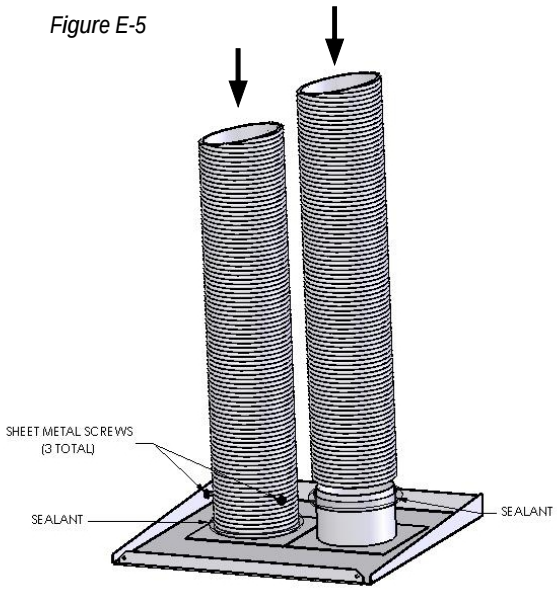


## F. POSITION THE FIREPLACE INSERT:

**1. #CMB-FLP Floor Protector Installation:**

**ZERO-CLEARANCE INSTALLATIONS: If you have removed the floor in the existing zero-clearance fireplace, the #CMB-FLP floor protector must be installed over the exposed surface to protect to combustible materials.**

**To install the #CMB-FLP floor protector:**

**A. Set the floor protector, insulation side down, in desired position over the exposed combustible material flooring.**

**Place the insert in the fireplace opening on top of the #CMB-FLP floor protector.**

| IMPORTANT: |
|---|
| The #CMB-FLP and bottom of the fireplace insert are the same size & shape. Make sure that the insert is properly aligned onto the #CMB-FLP floor protector. |

*Figure F-1*

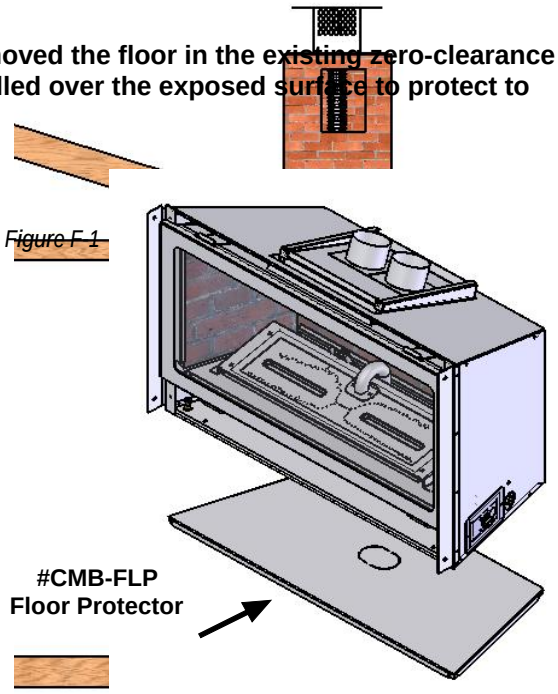


**2. Slide the insert into the fireplace opening.**

*Figure F-2*

3. **If using the CMB-FLP floor protector, make sure that it is properly positioned under the insert. Figure F-3**

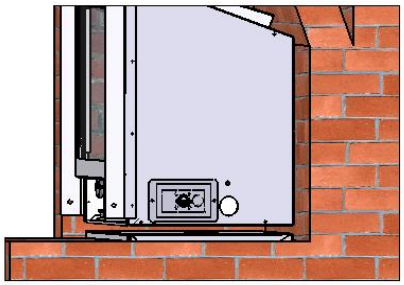

*Figure F-3* CMB-FLP Floor Protector

4. **Secure the air duct onto the insert by positioning the air duct into the channels at the top of the insert and sliding the air duct forward until it stops. Figures F-4 & F-5**

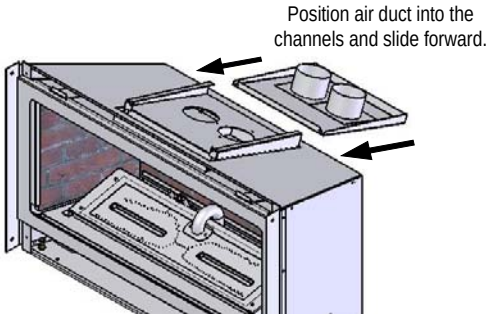


*Figure F-4*

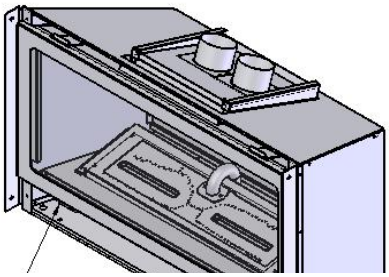

*Figure F-5*

5. **Secure the air duct to the insert, at the front, with (2) ½" sheet metal screws (included in the fireplace components packet). Refer to Figure F-6.**

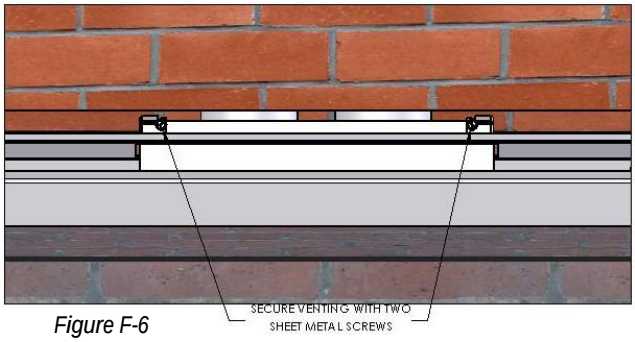


*Figure F-6*

6. **If necessary level the unit by threading the leveling bolts (included in the components packet) into the nuts mounted in the bottom of the insert behind the lower air passage - 2 each side. See Figure F-7.**

*Figure F-7*

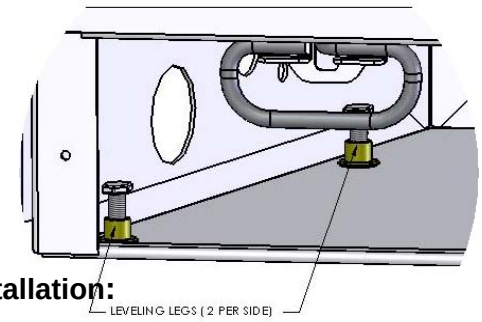


## G. Complete the gas line installation:

1. **This fireplace is designed to accept either a 3/8" or ½" gas line approved for gas appliances. Consult local building codes to properly size the gas supply line leading to a 3/8" reduction.**

2. **Run the gas line into the fireplace, preferably through the left gas line hole. A gas line knock-out is also located in the outer bottom of the insert when running the gas line through the bottom.**

   **IMPORTANT: Do not run the incoming gas line in a manner that would obstruct the operation of the fan.**

3. **Install the manual shut off valve (included with this fireplace) upstream from the regulator.**

4. **Connect the flexible gas line (installed on the gas valve on the millivolt board) to the manual shut off valve.**

## H. Check millivolt board installation:

**NOTE: Refer to pages #26 & #27 in this installation manual for complete millivolt board installation procedures.**

1. **Ensure that all (6) nuts are attached to the mounting studs, securing the millivolt board in position .**

2. **Verify that the burner venturi is properly positioned over the burner orifice and the burner /cover assembly is secured to the burner heat shield.**

3. **Check all gas connection for leaks, whether field or factory made.**

## I. Complete the fan wiring installation:

**Model #CMB-31 only: Refer also to Figure C-1, page #7.**

1. **Secure the electrical access panel to the side of the fireplace.**
2. **Place the thermostatic control switch on the bottom of the fireplace.**
3. **Plug the cord into the receptacle in the electrical box.**
4. **Turn the speed control counter-clockwise until it 'clicks'. This is the 'OFF' position.**
5. **Turn the speed control 'ON' by turning the knob clockwise past the 'click' - this is the highest setting.**

*Figure I-1*

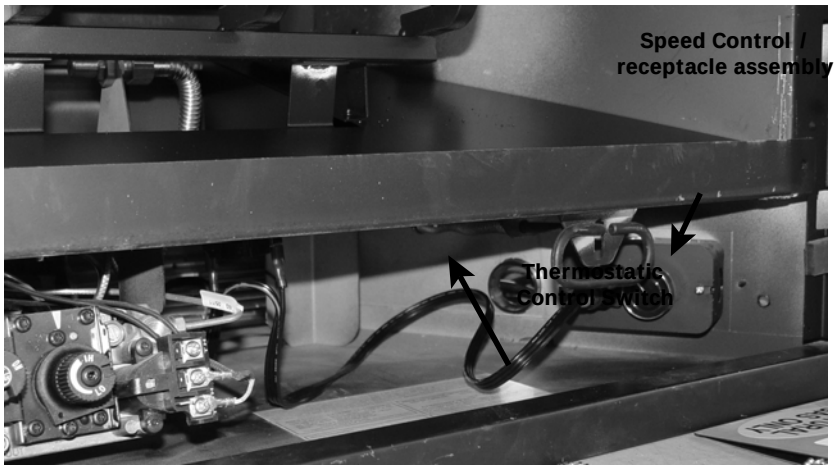


***NOTE: The fan will not operate unless the speed control has been turned 'ON'. The fan will not turn 'ON' until sufficient heat is applied to the thermostatic control switch . The fan will turn 'ON' and 'OFF' automatically when the fireplace heats and cools. Adjust fan to desired speed while it is running.***

***TEMPERATURE CONTROL SWITCH POSITION: Prior to adjusting the temperature control switch, unplug the 3-prong plug on the fan cord from the receptacle. Adjust the position of the temperature control switch to a warmer location under the firebox to turn the fan 'ON' sooner or move it to a cooler location under the firebox to turn the fan 'ON' later. The fan will turn on when the sensor in the temperature control switch reaches 110° F and will turn 'OFF' when the sensors reach 90° F. After adjustment, plug the 3-prong plug on the fan cord into the receptacle.***

*NOTE: This appliance must be electrically grounded and connected in accordance with local codes, or in the absence of local codes, with the National Electrical Code, ANSI/NFPA 70-Current edition. or the Canadian Electrical Code, CSA C22.1.*

**Model #CMB-31-RF only: Refer also to Figure C-2 page #8.**

1. **Secure the electrical access panel to the side of the fireplace.**
2. **Plug the cord into the receptacle in the electrical box.**
3. **Upon complete installation of this fireplace, follow the lighting & shutdown instructions at the back of this manual as well as the instructions included in the remote transmitter for complete fan operation guidelines.**

## J) ATTACH THE SHROUD

| | | |
|---|---|---|
| **Shroud assembly includes:** | **(1) Shroud top** | **(2) 10-24 x 1" RH Philips Mch Screw (#300388)** |
| | **(1) Shroud left side** | **(6) 8 x 3/8" Phillips PH-Type B Blk Zinc SMS (#300121)** |
| | **(1) Shroud right side** | **(4) 10-24 x 1/2" PH Phillips Truss head Screw BZ (300338-1)** |

**(1) Upper Hood**
**(1) Lower grill**

## ASSEMBLE THE SHROUD - Figure J-1

1. Attach the upper hood to the shroud top piece by aligning the holes on the top flange on the hood to the corresponding mounting holes on lower inside flange of the shroud top piece. Secure with (2) 3/8" phillips head screws (A), provided.

2. Secure the right and left shroud pieces to the top piece by aligning the (2) holes in the side pieces to the holes in the top piece. Secure with 3/8" phillips head screws provided (2 ea. side) (B).

*NOTE: Screws (A) & (B) are secured from the bottom*

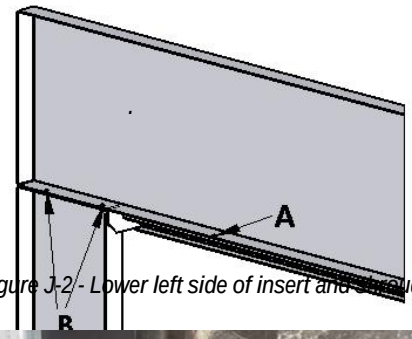


*Figure J-2 - Lower left side of insert and shroud shown.*

## ATTACH THE SHROUD - Figure J-2

1. Align the slotted holes located on the inside flange of the shroud side pieces to the threaded mounting nuts located on the inside side flanges on the insert. NOTE: There are (2) for each side.

2. Secure the shroud by inserting (1) 3/4" phillips head screw through the slotted holes and into the threaded mounting nuts. Do not tighten at this time.

3. Adjust shroud so that is sets against the fireplace face finish material, then tighten the screws to secured in position.

## INSTALL THE LOWER GRILL - Figure J-2

1. Align the threaded mounting holes on each side of the lower grill to the corresponding mounting holes on the inside flange of the shroud side pieces and secure with the (2) 1" phillips head screws, provided. (1 each side.)

*Figure J-1*

## K. LOG INSTALLATION **- Log Set #CMB-500**

This log set includes 11 logs and 1 pkg. rock wool burning embers.

| | |
|---|---|
| Note: | Each log is numbered on the bottom and should be installed according to the instructions and diagrams below. |

1. Install base logs, C1, C2, C3, onto the burner as shown in Figure K-1, aligning the mounting holes in the bottom of the logs to the mounting studs in the burner.

2. Install the ember logs, C4, C5 & C6 onto the front of the burner as shown in Figure K-1.

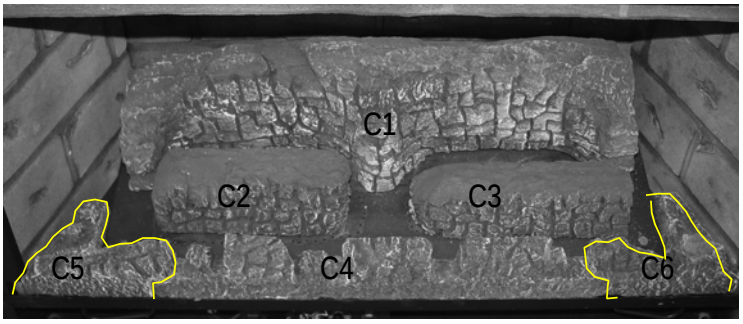


*Figure K-1*

3. Install middle log C7, and top logs C8, C9, C10, & C11 onto the base logs as shown in Figure K-2 aligning the logs to the corresponding notched out sections in the base logs.

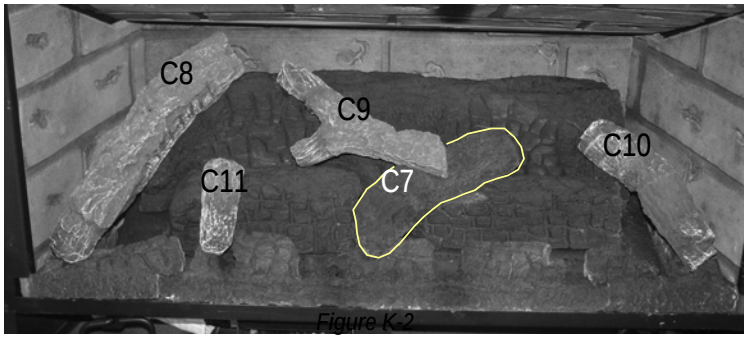


*Figure K-2*

4. Place rock wool burning embers as desired onto the logs and burner to enhance glowing effect and flame appearance.

| | |
|---|---|
| *NOTE:* | *You will not use all the rock wool ember material at this time. Save for future use.* |

***Completed Log Set Installation***

## L. COMPLETE THE INSTALLATION

1. THIS STEP SHOULD ONLY BE DONE BY A QUALIFIED INSTALLER OR SERVICE TECHNICIAN:

   A) Perform lighting and shutdown procedures as described on pages #19-20. This should be done prior to replacing the glass so that any necessary adjustments can be made and proper operation and log position verified.

2. REPLACE THE GLASS. Refer also to Figure L-1.

*Figure L-1*

WARNING: DO NOT OPERATE THIS FIREPLACE WITH THE GLASS ASSEMBLY REMOVED, CRACKED, OR BROKEN. Replacement of the glass assembly should be done by a licensed or qualified service person.

A. Align the 2 slots in the top of the glass assembly over the 2 tabs on the fireplace (at the top).
B. Place the glass assembly so it is flush with the front of the fireplace front.
C. While holding the glass assembly, pull the latches out and secure over the glass latch clips on the bottom of the glass frame locking it in place.

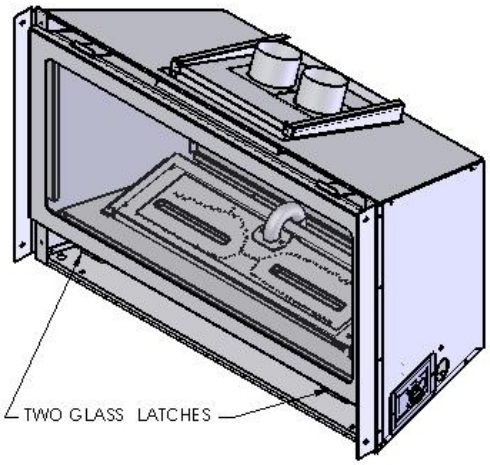


*Left intentionally blank.*

## M. MODEL CMB-31 ONLY: THERMOSTAT - WALL SWITCH - REMOTE INSTALLATION

**CAUTION: DO NOT CONNECT HIGH VOLTAGE (115V) WIRE TO THE GAS VALVE!**

**If** desired, a thermostat (wireless style available), wall switch, or remote control assembly may be used to turn the fireplace 'OFF' and 'ON'. Only *ONE* of these may be installed. Follow instructions included with each assembly.

OPTIONAL: Disconnect the on/off rocker switch wires from the top & bottom terminals on the gas valve. Refer to Figure Q-1, page #28 of this manual.

NOTE: INSTALLATION OF A THERMOSTAT OR WALL SWITCH SHOULD ONLY BE DONE BY A QUALIFIED INSTALLER.

*Figure M-1*

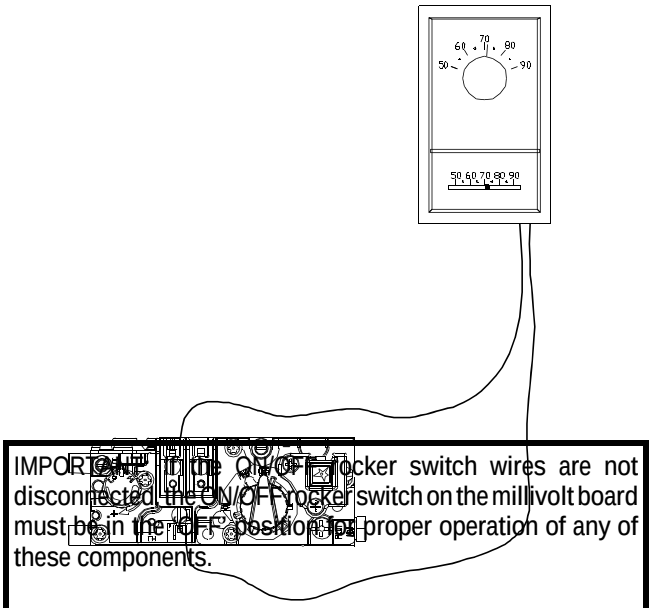


IMPORTANT: If the ON/OFF rocker switch wires are not disconnected, the ON/OFF rocker switch on the millivolt board must be in the 'OFF' position for proper operation of any of these components.

If the rocker switch is 'ON', the fireplace burner will operate until it is turned 'OFF' by the rocker switch. A wall switch, thermostat, or remote control will not turn the fireplace 'OFF' when it has been turned 'ON' by the rocker switch.

NOTE: The fireplace must be turned 'ON' and 'OFF' by the same method. For example: If the fireplace is turned 'ON' by the remote control, it must be turned 'OFF' by the remote control.

## *WALL SWITCH / THERMOSTAT USERS:*

Run low-voltage (thermostat) wires from the terminals on the gas valve to the desired location of the wall switch or thermostat.

Attach the appropriate connector to each wall switch / thermostat wire and connect to the top and bottom terminals on the gas valve marked 'TH'.

## *REMOTE CONTROL USERS*:

Follow instructions included with the remote control.

IMPORTANT: The insulated cover included with the remote control must be placed over the remote receiver to protect it from overheating.

*Remote Control Wiring Diagram*

*Figure M-2*

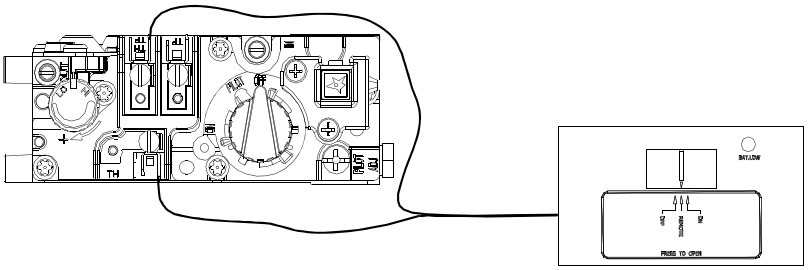


*Thermostat Wiring Diagram*

## N. MODEL #CMB-31 ONLY: LIGHTING AND SHUTDOWN PROCEDURES

NOTE: Prior to lighting, check all fittings for leakage. This is accomplished by applying soapy water on all connections made. If there is any leakage, bubbles will appear at the point of connection. If bubbles occur, tighten the fittings until the bubbles no longer appear.

**IMPORTANT: TEST ALL CONNECTIONS WHETHER FIELD OR FACTORY MADE.**

NOTE: The appliance and its individual shutoff valve must be disconnected from the gas supply piping system during any pressure testing of that system at test pressures in excess of ½ psi.

NOTE: The appliance must be isolated from the gas supply piping system by closing its individual manual shut off valve during any pressure testing of the gas line at test pressures equal to or less than 1/2 psig (3.5 kPa).

Pressure check taps for the manifold (outgoing) and inlet (incoming) pressures are located in front of the gas valve. The left pressure tap is the manifold pressure and the right pressure tap is the incoming pressure. Follow instructions on page #21 for checking these pressures.

### FOR YOUR SAFETY - READ BEFORE LIGHTING

WARNING: If you do not follow these instructions exactly, a fire or explosion may result causing property damage, personal injury or loss of life.

A. This appliance has a pilot which must be lighted by hand. When lighting the pilot, follow these instructions exactly.
B. BEFORE LIGHTING, smell all around the appliance for gas. Be sure to smell next to the floor because some gas is heavier than air and will settle on the floor.
C. Use only your hand to push in or turn the gas control knob. Never use tools. If the knob will not push in, or turn by hand, don't try to repair it, call a qualified service technician. Forced or attempted repair may result in a fire or explosion, and loss of warranty.
D. Do not use this appliance if any part has been under water. Immediately call a qualified service technician to inspect the appliance and to replace any part of the control system which has been under water.

DO NOT STORE OR USE GASOLINE OR OTHER FLAMMABLE VAPORS AND LIQUIDS IN THE VICINITY OF THIS OR ANY OTHER APPLIANCE.

DUE TO HIGH SURFACE TEMPERATURES, KEEP CHILDREN, CLOTHING AND FURNITURE AWAY.

This appliance needs fresh air for safe operation and must be installed so there are provisions for adequate combustion and ventilation air.

WHAT TO DO IF YOU SMELL GAS:
*Do not touch electrical switches.
*Do not try to light any appliance.
*Do not use any phone in your building.
*Follow the gas supplier's instructions.
*Immediately call your gas supplier from a neighbor's phone.
*If you cannot reach your gas supplier, call the fire department.

### LIGHTING INSTRUCTIONS

NOTE: Read 1-8 before lighting the unit for the first time. Refer to Figure N-1, page #20.

1. Set the thermostat to the lowest setting, if installed.
2. Turn off all electric power to the appliance. (Fan)
3. To access the gas valve & controls, open the doors or lower grill.
4. Push in control knob (A) slightly and turn clockwise to "OFF".

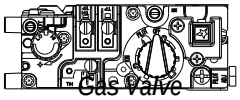


NOTE: Knob cannot be turned from "PILOT" to "OFF" unless knob is pushed in slightly. Do not force.

5. Wait five (5) minutes to clear out any gas. If you then smell gas, STOP! Follow the safety information on the front cover of this installation manual. If you don't smell gas, go to the next step.

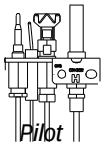


6. Find the pilot - follow metal tube from gas control. The pilot is located inside the combustion chamber.
7. Push the control knob (A) on the gas valve in slightly and turn counterclockwise to "PILOT".
8. Push in the control knob all the way and hold in. Press the BLACK piezo igniter button (B).

The pilot will generally light with two or three pushes on the igniter. Hold the knob in for about one (1) minute after the pilot

is lit. Release knob and it will pop back out. Pilot should remain lit. If it goes out, repeat steps 4 through 8.

*If knob does not pop out when released, stop and immediately call your service technician or gas supplier.
*If the pilot will not stay lit after several tries, turn the gas control knob to "OFF" and call your service technician or gas supplier.

9. Push the control knob on the gas valve in slightly and turn counterclockwise to the "ON" position.

10. The burner can now be turned 'ON' or lit by depressing the the ON/OFF rocker switch (C) located beside the valve *OR* by setting the thermostat or remote control to the desired setting.

11. NOTE: When the unit is initially lit, condensation will appear on the glass, this is normal in all gas fireplaces, and will disappear in one to three minutes.

*Figure N-1*

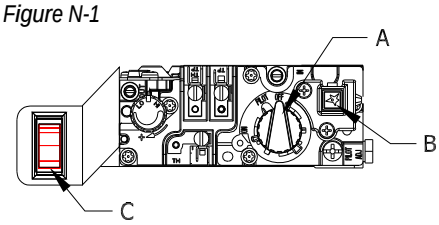


TO TURN THE BURNER OFF:

To turn the burner 'OFF', depress the ON/OFF rocker switch to 'OFF', flip 'off' the wall switch, or adjust the setting on the thermostat or remote control. NOTE: The pilot will stay lit.

TO TURN THE PILOT OFF:

To turn off the pilot, push in and turn the control knob to the "OFF" position. DO NOT FORCE.

NOTE: A PAINT SMELL WILL OCCUR DURING THE FIRST FEW HOURS OF BURNING. IT IS RECOMMENDED TO LEAVE THE FAN OFF DURING THIS PERIOD AS THIS WILL SPEED UP THE PAINT CURING PROCESS.

INITIAL BURN PERIOD

DUE TO THE MAKEUP OF THE FIBER LOGS & REFRACTORY, THE CURING PROCESS MAY TAKE UP TO 4 HOURS OF BURN TIME. DURING THIS PERIOD, THE LOGS & REFRACTORY WILL DISCOLOR, BUT WILL RETURN TO THEIR TRUE COLOR ONCE THE CURING PROCESS IS COMPLETE. DO NOT BURN THIS FIREPLACE WITHOUT THE GLASS PROPERLY IN PLACE.

**MAKE SURE THE HOMEOWNER IS AWARE OF THIS**

NOTE: Children and adults should be alerted to the hazards of high surface temperatures and should stay away to avoid burns or clothing ignition. Young children should be carefully supervised when they are in the same room as the appliance.

Clothing or other flammable material should not be placed on or near the appliance.

NOTE: THIS FIREPLACE MAY PRODUCE NOISES OF VARYING DEGREE AS IT HEATS AND COOLS TO DUE METAL EXPANSION AND CONTRACTION. THIS IS NORMAL AND DOES NOT AFFECT THE PERFORMANCE OR LONGEVITY OF THE FIREPLACE.

## MODEL #CMB-31 ONLY: PRESSURE TEST - MANIFOLD & INLET PRESSURE

**IMPORTANT NOTICE: A pressure check tap for both the manifold (outgoing) and inlet (incoming) pressure has been incorporated into the valve by HONEYWELL Controls. The left pressure tap is the manifold pressure and the right pressure tap measures the incoming pressure. Follow the instructions below for proper pressure testing procedures.**

**TO CHECK THE MANIFOLD PRESSURE:**

1. **Light pilot .**
2. **Loosen the manifold pressure tap [D] by turning the screw counter-clockwise.**
3. **Attach manometer to pressure tap using a 5/16" I.D. hose [F].**
4. **Push the control knob [A] on the gas valve in slightly and turn to the 'ON' position.**
5. **Turn the burner 'ON' by depressing the rocker switch [C] and note manometer reading.**
6. **Depress the rocker switch [C] to the 'OFF' position.**
7. **Disconnect manometer hose and tighten screw (clockwise). Screw should be snug, do not over tighten.**
8. **Attach manometer to manifold pressure tap to verify that it is completely sealed. Manometer should read no pressure when the rocker switch is depressed to the 'ON' position.**

**NOTE: If manifold pressure reading is within the normal range, an incoming pressure check is not necessary. A too high or too low pressure reading warrants an inlet (incoming) gas pressure check.**

**TO CHECK THE INLET PRESSURE:**

1. **Loosen Inlet pressure tap screw [E] by turning screw counter-clockwise.**
2. **Attach manometer using a 5/16" I.D. hose [F].**
3. **Light the pilot.**
4. **Push the control knob on the gas valve [A] in slightly and turn to the 'ON' position. (Burner should not come 'ON') and note manometer reading.**
5. **Turn the rocker switch [C] to the 'ON' position by depressing the switch and check the pressure to ensure that it stays near the maximum inlet pressure.**
6. **Depress the rocker switch [C] to the 'OFF' position.**
7. **Turn the pilot 'OFF' by pushing the control knob in slightly and turning to the 'OFF' position.**
8. **Disconnect hose and tighten screw (clockwise). Screw should be snug, do not over tighten.**
9. **Relight pilot. Push the control knob [A] in slightly and turn to the 'ON' position. Attach manometer to the inlet pressure tap to verify that it is completely sealed. Manometer should read no pressure.**

**NOTE: If Inlet pressure reading is too high or too low, contact the gas company. Only a qualified gas service technician should adjust the incoming gas pressure.**

**CAUTION: A LOW PRESSURE READING CAN CAUSE DELAYED IGNITION.**

*Figure N-2*

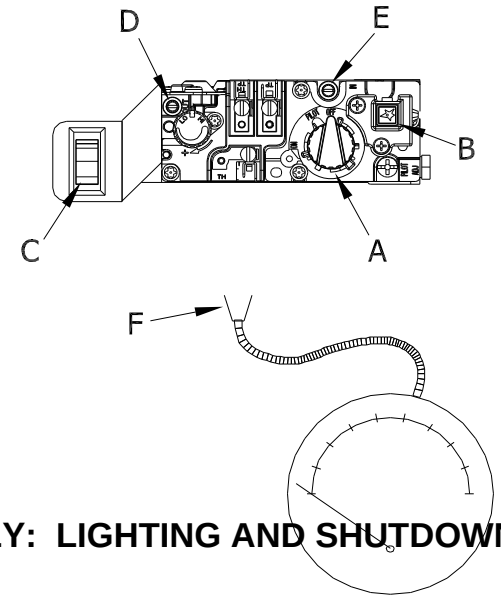


## MODEL #CMB-31-RF ONLY: LIGHTING AND SHUTDOWN PROCEDURES

NOTE: Prior to lighting, check all fittings for leakage. This is accomplished by applying soapy water on all connections made. If there is

any leakage, bubbles will appear at the point of connection. If bubbles occur, tighten the fittings until the bubbles no longer appear.

**IMPORTANT: TEST ALL CONNECTIONS WHETHER FIELD OR FACTORY MADE.**

NOTE: The appliance and its individual shutoff valve must be disconnected from the gas supply piping system during any pressure testing of that system at test pressures in excess of ½ psi.

NOTE: The appliance must be isolated from the gas supply piping system by closing its individual manual shut off valve during any pressure testing of the gas line at test pressures equal to or less than 1/2 psig (3.5 kPa).

Pressure check taps for the manifold (outgoing) and inlet (incoming) pressures are located in front of the gas valve. The left pressure tap is the manifold pressure and the right pressure tap is the incoming pressure. Follow instructions on page #24 for checking these pressures.

## FOR YOUR SAFETY - READ BEFORE LIGHTING

WARNING: If you do not follow these instructions exactly, a fire or explosion may result causing property damage, personal injury or loss of life.

A. This appliance has a pilot which must be lighted by hand. When lighting the pilot, follow these instructions exactly.
B. BEFORE LIGHTING, smell all around the appliance for gas. Be sure to smell next to the floor because some gas is heavier than air and will settle on the floor.
C. Use only your hand to push in or turn the gas control knob. Never use tools. If the knob will not push in, or turn by hand, don't try to repair it, call a qualified service technician. Forced or attempted repair may result in a fire or explosion, and loss of warranty.
D. Do not use this appliance if any part has been under water. Immediately call a qualified service technician to inspect the appliance and to replace any part of the control system which has been under water.

DO NOT STORE OR USE GASOLINE OR OTHER FLAMMABLE VAPORS AND LIQUIDS IN THE VICINITY OF THIS OR ANY OTHER APPLIANCE.

DUE TO HIGH SURFACE TEMPERATURES, KEEP CHILDREN, CLOTHING AND FURNITURE AWAY.

This appliance needs fresh air for safe operation and must be installed so there are provisions for adequate combustion and ventilation air.

WHAT TO DO IF YOU SMELL GAS:
*Do not touch electrical switches.
*Do not try to light any appliance.
*Do not use any phone in your building.
*Follow the gas supplier's instructions.
*Immediately call your gas supplier from a neighbor's phone.
*If you cannot reach your gas supplier, call the fire department.

NOTE: Read 1-8 before lighting the unit for the first time. Refer to Figure N-3, page #23.

1. Set the thermostat to the lowest setting.
2. Turn off all electric power to the appliance.
3. Open the doors or lower grill to access the gas valve & controls.
4. Push in control knob slightly and turn clockwise to the "OFF" position.

NOTE: Knob cannot be turned from "PILOT" to "OFF" unless knob is pushed in slightly. Do not force.

5. Wait five (5) minutes to clear out any gas. If you then smell gas, STOP! Follow the safety information above. If you don't smell gas, go to the next step.

6. Find the pilot - follow metal tube from gas control. The pilot is located inside the combustion chamber.

7. Push the control knob on the gas valve in slightly and turn counterclockwise to "PILOT".

8. Push in the control knob all the way and hold in. Push the plunger on the piezo until the pilot is lit.

   The pilot will generally light with two or three pushes on the igniter. When the pilot is lit, the LED on the control will come on afer approximately 60 seconds and will blink continuously. Release knob and it will pop back out. Pilot should remain lit. If it goes out, repeat steps 4 through 8.

   *If knob does not pop out when released, stop and immediately call your service technician or gas supplier.
   *If the pilot will not stay lit after several tries, turn the gas control knob to "OFF" and call your service technician or gas supplier.

9. Push the control knob on the gas valve in slightly and turn counterclockwise to the "ON" position. If the manual switch is in the

LOCAL position, the main burner will turn on immediately.

IMPORTANT: On the initial use of a transmitter, a recognition operation is required between the receiver / valve and the transmitter.

1. Turn the gas control to the PILOT position.
2. Move the LOCAL / REMOTE switch to the LOCAL position for at least two seconds, then move the switch to the REMOTE position.
3. Press the FAN or FLAME button on the transmitter within 30 seconds of the switch change.
4. Turn the gas control knob to the ON position.

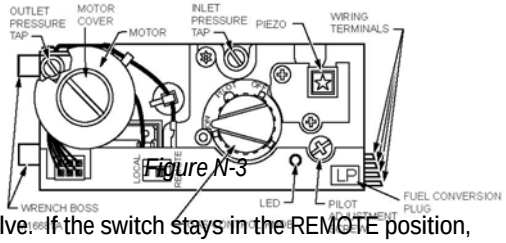

*Figure N-3*

The LED will blink indicating that the transmitter will now work with the receiver / valve. If the switch stays in the REMOTE position, the RT8220A Transmitter will control the main valve, flame modulation level and fan control.

If the LOCAL / REMOTE switch is in the LOCAL position, the receiver / valve will be at the highest fixed pressure setting.

NOTE: When the unit is initially lit, condensation will appear on the glass, this is normal in all gas fireplaces, and will disappear as the fireplace heats.

TO TURN THE BURNER OFF:

LOCAL SETTING: Turn the control knob clockwise to the pilot position.

REMOTE SETTING: The RT8220A transmitter can shut off the main burner and fan, however, the control is still 'ON' and a command from the transmitter can turn the main burner and fan 'ON'.

TO TURN OFF THE SYSTEM:

1. Open the doors or lower grill to access the gas valve & controls.
2. Turn the gas control knob clockwise to the 'OFF' position. This closes the main gas and safety valves. The transmitter cannot turn on the main burner or the fan.

NOTE: A PAINT SMELL WILL OCCUR DURING THE FIRST FEW HOURS OF BURNING. IT IS RECOMMENDED TO LEAVE THE FAN OFF DURING THIS PERIOD AS THIS WILL SPEED UP THE PAINT CURING PROCESS.

INITIAL BURN PERIOD

DUE TO THE MAKEUP OF THE FIBER LOGS & REFRACTORY, THE CURING PROCESS MAY TAKE UP TO 4 HOURS OF BURN TIME. DURING THIS PERIOD, THE LOGS & REFRACTORY WILL DISCOLOR, BUT WILL RETURN TO THEIR TRUE COLOR ONCE THE CURING PROCESS IS COMPLETE. DO NOT BURN THIS FIREPLACE WITHOUT THE GLASS PROPERLY IN PLACE.

**MAKE SURE THE HOMEOWNER IS AWARE OF THIS**

NOTE: Children and adults should be alerted to the hazards of high surface temperatures and should stay away to avoid burns or clothing ignition. Young children should be carefully supervised when they are in the same room as the appliance.

Clothing or other flammable material should not be placed on or near the appliance.

NOTE: THIS FIREPLACE MAY PRODUCE NOISES OF VARYING DEGREE AS IT HEATS AND COOLS TO DUE METAL EXPANSION AND CONTRACTION. THIS IS NORMAL AND DOES NOT AFFECT THE PERFORMANCE OR LONGEVITY OF THE FIREPLACE.

## MODEL #CMB-31-RF ONLY: PRESSURE TEST - MANIFOLD & INLET PRESSURE

**IMPORTANT NOTICE: A pressure check tap for both the manifold (outgoing) and inlet (incoming) pressure has been incorporated into the valve by HONEYWELL Controls. The left pressure tap is the manifold pressure and the right pressure tap measures the incoming pressure. Follow the instructions below for proper pressure testing procedures.**

**NOTE: Both the inlet and outlet pressure taps have a captive screw.**

1. **Be sure the gas control knob is in the PILOT position.**
2. **Light the pilot.**
3. **Loosen, but do not remove the outlet tap captive screw.**
4. **Attach a plastic tube with a 1/4" shell ID and connect the manometer.**
5. **Turn the gas control knob to the ON position.**
6. **Check the outlet tap pressure.**
7. **Turn the gas control knob to the OFF position.**
8. **Shut off the gas supply at the manual valve in the gas piping to the appliance or, for LP, at the tank.**
9. **Loosen, but do not remove the inlet tap captive screw.**
10. **Attach a plastic tube with a 1/4" shell ID and connect the manometer.**
11. **Turn on the gas supply at the manual valve.**
12. **Check the inlet tap pressure.**
13. **Turn the gas control knob to the OFF position.**
14. **Repeat the Gas Leak Test at the pressure tap with the main burner operating.**
15. **Always tighten the screws in the pressure taps after disconnecting the plastic tubes.**

*Figure N-4*

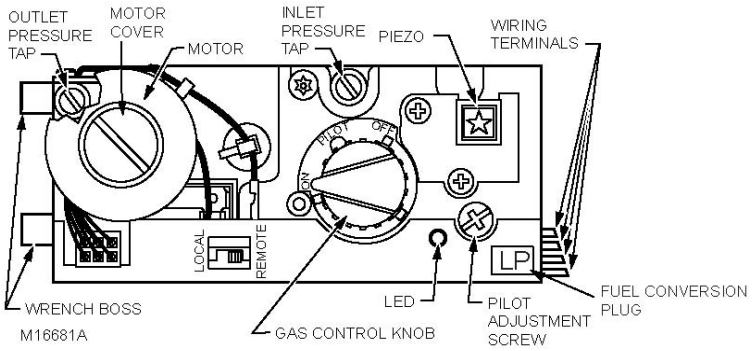


**GAS LEAK TEST:**

1. **Paint the pipe connection upstream of the gas valve with a rich soap and water solution. Bubbles indicate a gas leak.**
2. **If a leak is detected, tighten the pipe connections.**
3. **Light the main burner.**
4. **With the main burner in operation, paint the pipe joints (including adaptors) and valve inlet and outlet with a rich soap and water solution.**
5. **If another leak is detected, tighten the adapter screws, joint, and pipe connections.**
6. **Replace the part if the leak cannot be stopped.**

## O. MAINTENANCE REQUIREMENTS

1. The appliance should be inspected at least once a

year by a professional service person.

NOTE: INSTALLATION AND REPAIR SHOULD BE DONE ONLY BY A QUALIFIED SERVICE PERSON. THE APPLIANCE SHOULD BE INSPECTED BEFORE USE AND AT LEAST ANNUALLY BY A QUALIFIED SERVICE PERSON. MORE FREQUENT CLEANING MAY BE REQUIRED DUE TO EXCESSIVE LINT FROM CARPETING, BEDDING MATERIALS, ETC. IT IS IMPERATIVE THAT CONTROL COMPARTMENTS, BURNERS AND CIRCULATION AIR PASSAGEWAYS OF THE APPLIANCE BE KEPT CLEAN.

2. The compartment below the firebox (behind the doors or lower grill) must be cleaned at least once a year, more frequent cleaning may be required due to excessive lint from carpeting, bedding materials, or other fibrous materials. It is imperative that the burner be cleaned once a year.

FAN

The fan should be disconnected from electrical current, and cleaned (vacuumed) every six months. The bearings are sealed and require no oiling.

VENT SYSTEM

Annual examination of the venting system by a qualified agency is required.

IF THE VENT-AIR INTAKE SYSTEM IS DISASSEMBLED FOR ANY REASON, REINSTALL PER THE INSTRUCTIONS PROVIDED WITH THE INITIAL INSTALLATION.

The flow of combustion and ventilation air must not be obstructed.

IMPORTANT: ANY SAFETY SCREEN OR GUARD REMOVED FOR SERVICING MUST BE REPLACED PRIOR TO OPERATING THE APPLIANCE.

---

CAUTION: LABEL ALL WIRES PRIOR TO DISCONNECTION WHEN SERVICING CONTROLS. WIRING ERRORS CAN CAUSE IMPROPER AND DANGEROUS OPERATION. VERIFY PROPER OPERATION AFTER SERVICING.

MILLIVOLT BOARD SYSTEM

1. Annual cleaning of the burner is required. The burner assembly may be removed for easier access.
2. Refer to pages #26-#27 for complete instruction on removing & reinstalling the burner & cover assembly.
7. Visually check for blocked port holes, especially near the pilot. Blocked port holes may cause delayed ignition.
4. Replace the burner assembly following instructions on pages #26-#27.
5. Visually check the pilot light and burner when they are burning. The flames should be steady, not lifting or floating.

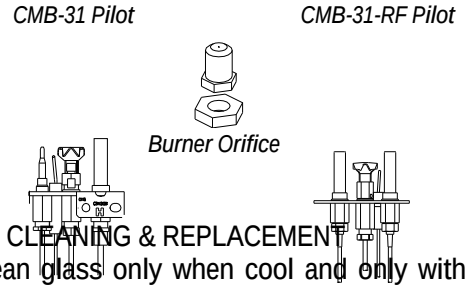


GLASS CLEANING & REPLACEMENT

- Clean glass only when cool and only with non-abrasive cleansers.
- *Do not* operate this fireplace with the glass/frame assembly removed, cracked or broken.
- The glass assembly, Part #CMB-07T, shall only be replaced as a complete unit, as supplied by Hussong Mfg. Co., Inc.
- Replacement of the glass & gasket assembly, Part #CMB-07T, must only be performed by a licensed or qualified service person. DO NOT SUBSTITUTE MATERIALS.
- *Do not* strike or slam glass door assembly.

CAUTION: KEEP THE APPLIANCE AREA CLEAR OF COMBUSTIBLE MATERIALS, SUCH AS GASOLINE AND OTHER FLAMMABLE VAPORS AND LIQUIDS.

---

## P. MILLIVOLT BOARD REMOVAL & INSTALLATION. See Figures P-1 - P-3.

*REMOVE THE MILLIVOLT BOARD ASSEMBLY:*

1. Open the doors or lower grill to access the gas valve & controls. NOTE: It is not necessary to remove the shroud or full door shroud to remove the millivolt board.
2. Turn the black control knob to the 'OFF" position.
3. Shut off the gas supply at the manual shut off valve.
4. Disconnect gas flex line tube from the manual shut off valve.
5. Model #CMB-31: Disconnect any wall switch, remote control, or thermostat wire from the'TH' terminals on the gas valve.
6. Model #CMB-31-RF: Unplug the fan cord from the duplex receptacle, then disconnect the (2) wires from the fan cord. Note: The wires will remain connected to the back of the gas valve. Refer to wiring diagram, Figure D-2, page #8.
7. Remove the glass assembly, refer to Figure C-1, page #6. Set aside on a protected surface where it will not become damaged.
8. Remove the log set and place on a protected surface where they will not become damaged.
9. Loosen and remove the (2) screws securing the burner assembly. Refer to Figure P-1. Remove the burner assembly from the insert firebox.
10. Lift up the front edge of the heat shield and slide out of the firebox. Figure P-2.

*Figure P-1*

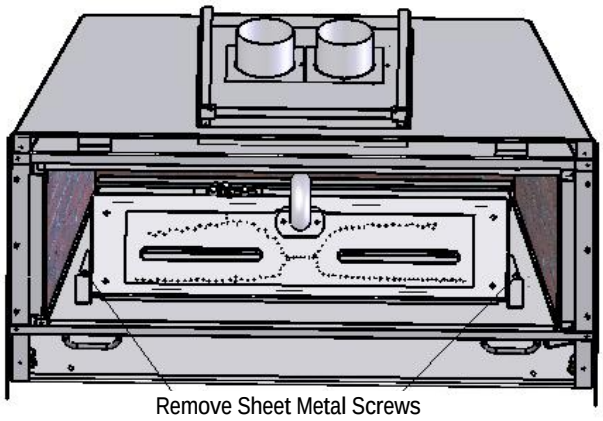


*Figure P-2*

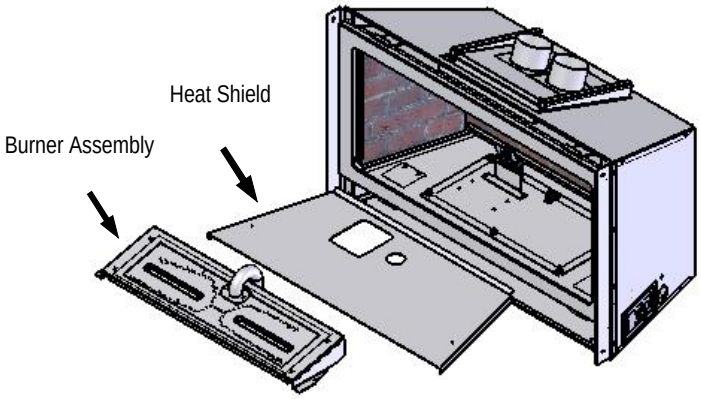


11. Loosen and remove the (6) nuts securing the millivolt board, Figure P-3. Carefully lift the board up and remove from the firebox.

*Figure P-3*

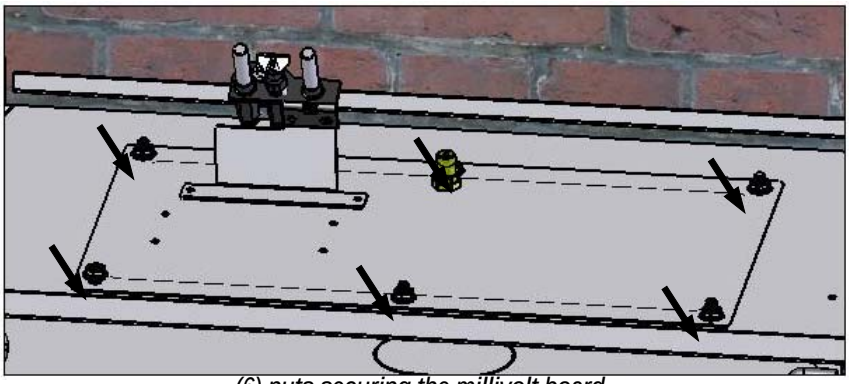

*(6) nuts securing the millivolt board.*

*INSTALL THE MILLIVOLT BOARD ASSEMBLY:*

*NOTE: The millivolt board must be fitted with a gasket, (included) to seal the board. Make certain this gasket is properly placed around the opening before installing the millivolt board.*

1. Grasp the millivolt board with both hands and place into the insert firebox, aligning the (6) mounting holes in the board to the mounting studs on the bottom of the firebox. IMPORTANT: BE CAREFUL NOT TO DAMAGE THE GASKET UNDER THE BOARD.

| | |
|---|---|
| CAUTION: | BEFORE SECURING THE BOARD INTO PLACE, MAKE CERTAIN THAT ALL OF THE WIRES (ATTACHED UNDER THE BOARD) ARE CLEAR AND UNOBSTRUCTED. |

2. Secure the board in place with the (6) nuts removed in step #11, page #26. Refer to Figure P-3, page #26.
3. Install the heat shield by positioning the cut-out sections in the heat shield over the pilot assembly and burner orifice. Center the heat shield side to side and slide all the way to the back. Refer to Figure P-2, page #26.
4. Place the burner assembly onto the heat shield, aligning the burner venturi over the burner orifice and the (2) mounting holes to the mounting holes in the heat shield. Secure with the sheet metal screws removed in step #9, page #26. Refer to Figure P-1, page #26.
5 Replace the logs. Refer to page #16 for proper placement if necessary.
6. Connect the flexible gas line to the manual shut-off valve.
7. Model #CMB-31: Re-connect any wall switch, remote control or thermostat wires onto the top & bottom terminals on the gas valve marked 'TH'.
8. Model #CMB-31-RF: Re-connect the wires from the valve to the fan cord. Refer to wiring diagram, Figure Q-2, page #29. Plug the 3-prong plug on the fan cord into the duplex receptacle.
9. Replace the glass assembly.
10. Check all connections for gas leaks, whether field or factory made.
11. Verify proper operation of the fireplace & log position. Refer to the lighting instructions in this manual.
12. Close doors or lower grill.

IMPORTANT: CHECK ALL CONNECTIONS, WHETHER FIELD OR FACTORY MADE, FOR LEAKS!

## O. TROUBLE SHOOTING GUIDE

NOTE: The millivolt board includes the following items: Valve, pilot assembly, piezo, electrode, on/off rocker switch, burner, burner venturi tubes, & burner orifices. If any of these items are defective, contact your dealer for the appropriate repair / replacement procedures to follow.

WARNING: DO NOT ATTEMPT TO SERVICE THIS UNIT IF YOU ARE NOT A QUALIFIED INSTALLER OR REPAIRMAN.

1. If the fireplace fails to ignite, a qualified service person should check the fireplace installation.
2. It is imperative that the control compartment, burner and circulation air passageways of the unit be kept clean. This is necessary to provide adequate combustion and ventilation air.
3. All of the working parts of this unit can be removed at one time. Before removing millivolt board, check for loose wires.

| PROBLEM | CAUSE | SOLUTION |
|---|---|---|
| 1. No spark when piezo button is depressed | Wire on back of piezo button is loose or off. | Put wire back into place. |
| | Wire from piezo to electrode is loose at electrode. | Reconnect wire. |
| | Electrode moved out of position. | Realign electrode with 1/8" space between it & the pilot. |
| 2. Pilot won't light | Gas shut off. | Turn Gas ON. |
| | Gas line not purged. | Hold black control knob in long enough to purge line. |
| | Not holding black control knob in long enough. | Hold in longer. |
| | No spark at piezo. | See problem 1. |
| 3. Pilot won't stay lit | Not holding black control knob in long enough. | Hold button in longer heat thermocouple. |
| | Thermocouple (or Generator - RF valve) connection loose at valve connection. | Check connection on valve & tighten if necessary. |
| | Pilot hood misdirecting pilot flame from thermocouple (or Generator - RF valve). | Check pilot flame location. Flame must be burning on generator(s) and thermocouple (CMB-31). |
| | Refractory panels not positioned against firebox back & sides. | Secure refractory panels with high-temp sealant. |

*WIRING DIAGRAM*
*MODEL #CMB-31*

*Figure Q-1*

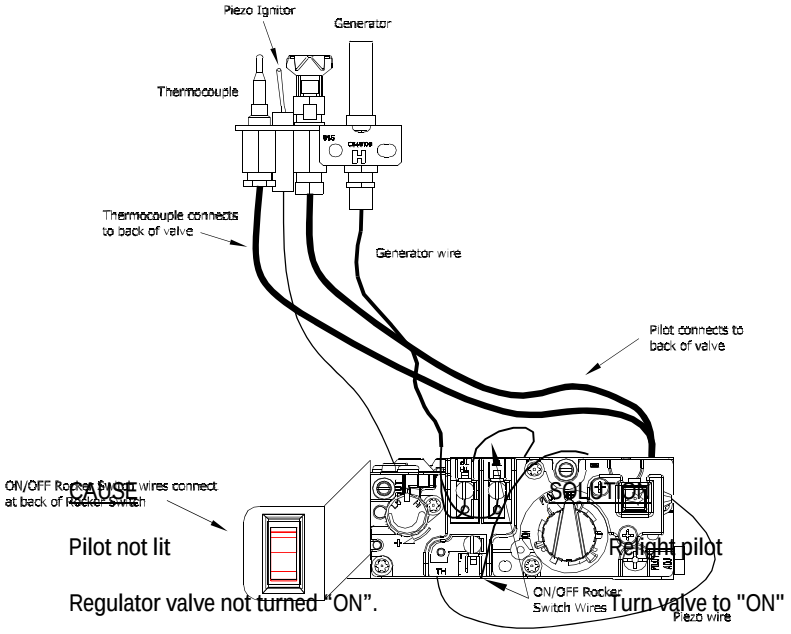


| PROBLEM | CAUSE | SOLUTION |
|---|---|---|
| 4. Burner won't light | Pilot not lit | Relight pilot |
| | Regulator valve not turned "ON". | Turn valve to "ON" |

| | | |
|---|---|---|
| | Rocker switch not turned “ON”. (Model CMB-31) | Depress switch. |
| | Rocker switch wires not connected. (Model CMB-31) | Check wiring diagram Figure Q-1 to ensure that all wires are secure. |
| | Generator wires loose at regulator terminals | Reposition wire an tighten screws. See Figures Q-1 & Q-2 for wiring instructions. |
| | Generator wire grounded out due to pinching of wires. | Nuts securing millivolt board may need loosening to remove pinched wire. |
| | Generator is not producing enough millivolts to operate burner. | Replace generator. |
| | Wall switch, remote control or thermostat not connected properly or turned to wrong setting. See Figures M-1 & M-2, page #18. (Model CMB-36) | Connect properly or disconnect and use ON/OFF switch only. |
| 5. Burner won't stay lit | Generator wires loose on valve terminals. | Reposition wires and tighten screws See Figures Q-1 & Q-2 for wiring instructions. |
| | Generator wire grounded out due to pinched wires. | Nuts securing millivolt board may need loosening to remove pinched wire. |
| | Generator is not producing enough millivolts to sustain burner operation. | Check millivolt reading, replace generator if necessary. |
| | Refractory panels not positioned against firebox. | Secure refractory panels with high-temp sealant. |

*WIRING DIAGRAM*
*Model CMB-31-RF*

*Figure Q-2*

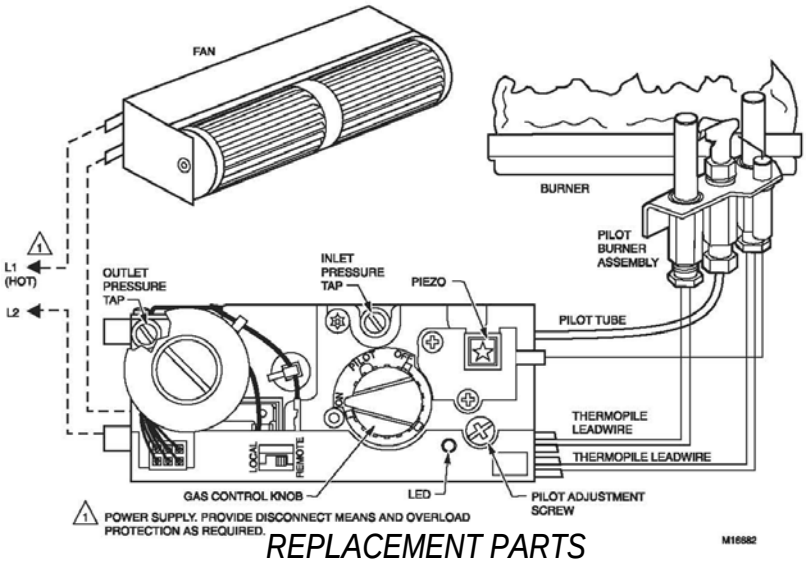


## *REPLACEMENT PARTS*

*Replacement parts are available through your local dealer. Information on optional components not listed below, is also available through your dealer.*

**MILIIVOLT BOARD AND PARTS - CMB-31**

| | |
|---|---|
| CMB-800 | Cambridge Millivolt Board - Natural Gas |
| 700-023 | On/Off Rocker Switch |
| 700-057 | Honeywell valve- Natural Gas |
| 700-059 | Thermocouple |
| 700-060 | Flexible Pilot Tubing (Valve to Pilot) |
| 700-063 | Pilot/Generator/Thermocouple - Natural Gas |
| 700-083 | Piezo Ignitor w/ wire |
| 700-092 | Millivolt Generator |
| 700-203 | Manual Shut off Valve |
| 700-213B | 18" Flexible Gas Line - Black |

700-224 3/8" Flexible Gas Line - Valve to Burner connection
700-237 Natural Gas orifice #37
700-252 LP Gas #52

| | |
|---|---|
| OCK-H37N | Natural Gas conversion kit |
| OCK-H52L | LP Gas conversion kit |

700-075 Natural Gas conversion cap
700-076 LP Gas conversion cap

| | |
|---|---|
| CMB-135 | Burner assembly |

**MILIIVOLT BOARD AND PARTS - CMB-31-RF**

| | |
|---|---|
| CMB-800RF | Cambridge Modulating Millivolt Board - Natural Gas |
| 700-107 | Honeywell RF Valve - Natural Gas |
| 700-108 | Remote control - RF Valve |
| 700-109 | Honeywell RF Pilot Assembly |
| 700-060 | Flexible Pilot Tubing (Valve to Pilot) |
| 700-083 | Piezo Ignitor w/ wire |
| 700-092 | Millivolt Generator |
| 700-203 | Manual Shut off Valve |

| | |
|---|---|
| 700-213B | 18" Flexible Gas Line - Black |

700-224 3/8" Flexible Gas Line- Valve to Burner connection
700-237 Natural Gas orifice #37
700-252 Natural Gas orifice #52

| | |
|---|---|
| OKC-H37L-RF | Natural Gas Conversion Kit |
| OCK-H52L-RF | LP Gas conversion kit |
| CMB-135 | Burner assembly |

**GLASS & GLASS GASKET**

| | |
|---|---|
| CMB-07T | 14 1/4" x 29 1/4" Glass with gasket |
| 900-006 | 1 1/8" Glass gasket w/ adhesive |
| CMB-005 | Replacement Valance |

**FAN ASSEMBLIES - REPLACEMENT**

| | |
|---|---|
| CMB-028 | Fan Assembly - Model #CMB-31 |

600-083 Speed control / receptacle assembly - CMB-31

| | |
|---|---|
| CMB-028-RF | Fan Assembly - Model #CMB-31-RF |

**LOG SET**

CMB-500 Log Set

| | | |
|---|---|---|
| Base Logs: | C1 Log | C4 Log |
| | C2 Log | C5 Log |
| | C3 Log | C6 Log |
| Top Logs: | C7 Log | C10 Log |
| | C8 Log | C11 Log |
| | C9 Log | |

900-REMB Rockwool Embers

**REFRACTORY PANELS**

| | |
|---|---|
| CMB-G900 | Refractory Panel Set - 3 pc. back & sides |
| CMB-G900B | Back Refractory panel |
| CMB-G900S | Side Refractory panel - 1 pc. |
| CMB-G902 | Top Refractory panel |

***Consult your dealer for information on optional accessories available for this fireplace.**

*SHROUDS & SHROUD TRIM: Contact your dealer for available styles & finishes.*

*This appliance tested & certified by:*
*OMNI-Test Laboratories, Inc.*
*5465 SW Western Avenue*
*Beaverton, Oregon 97005*

*Models #CMB-31 / CMB-31-RF - US & CANADIAN INSTALLATIONS*
*April 2006*

*Hussong Manufacturing Company, Inc.*
*204 Industrial Park Drive*
*Lakefield, MN 56150*

*www.kozyheat.com*

*Warranty Policy*

*Warranty Policy*