KOZY HEAT FIREPLACES
HUSSONG MANUFACTURING CO., INC.

INSTALLATION AND OPERATION MANUAL

BAYPORT 36 GLASS

Model #BAY-36-G
Direct Vent Gas Fireplace

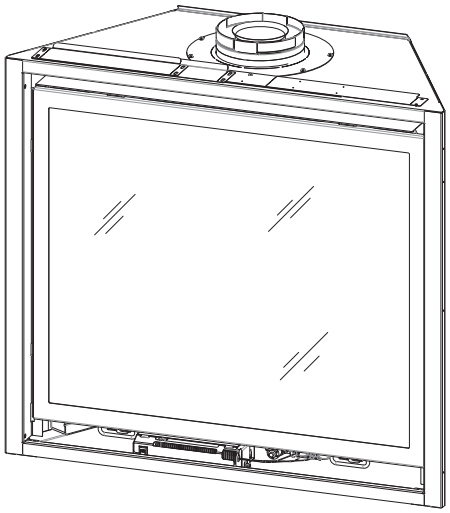

English and French installation manuals are available through your local dealer. Visit our website *www.kozyheat.com*.

Les manuels d'installation en français et en anglais sont disponibles chez votre détaillant local. Visitez *www.kozyheat.com*.

PFS C US

NATIONAL FIREPLACE INSTITUTE NFI CERTIFIED www.nficertified.org

We suggest that our gas hearth products be installed and serviced by professionals who are certified in the U.S. by the National Fireplace Institute® (NFI) as NFI Gas Specialists.

⚠ WARNING:
FIRE OR EXPLOSION HAZARD
Failure to follow safety warnings exactly could result in serious injury, death, or property damage.

- **Do not store or use gasoline or other flammable vapors and liquids in the vicinity of this or any other appliance.**
- **WHAT TO DO IF YOU SMELL GAS**
  - **Do not try to light any appliance.**
  - **Do not touch any electrical switch; do not use any phone in your building.**
  - **Leave the building immediately.**
  - **Immediately call your gas supplier from a neighbor's phone. Follow the gas supplier's instructions.**
  - **If you cannot reach your gas supplier, call the fire department.**
- **Installation and service must be performed by a qualified installer, service agency or the gas supplier.**

This appliance may be installed in an aftermarket, permanently located, manufactured home (USA only) or mobile home, where not prohibited by local codes.

This appliance is only for use with the type of gas indicated on the rating plate. This appliance is not convertible for use with other gases, unless a certified kit is used.

⚠ DANGER

HOT GLASS WILL CAUSE BURNS

DO NOT TOUCH GLASS UNTIL COOLED

NEVER ALLOW CHILDREN TO TOUCH GLASS

A barrier designed to reduce the risk of burns from the hot viewing glass is provided with this appliance and shall be installed for the protection of children and other at-risk individuals.

INSTALLER: Leave this manual with the appliance.
CONSUMER: Retain this manual for future reference.

Hussong Mfg. Co., Inc.
BAY-36-G Report No: 19-507

Rev. 14, June 2026
Starting Serial Number: **22 113383 34**

Read this manual before installation or operating this appliance.
Please retain this owner's manual for future reference.

CONGRATULATIONS!

We welcome you as a new owner of a Kozy Heat gas fireplace. Kozy Heat products are designed with superior components and materials, and assembled by trained craftsmen who take pride in their work. To ensure you receive a quality product, the burner and valve assembly are 100 percent test-fired, and the complete fireplace is thoroughly inspected before packaging. Our commitment to quality and customer satisfaction has remained the same for over 50 years. We offer a complete line of gas, and electric fireplaces, along with stylish accessories to complement any decor. Adding a fireplace is one of the best ways to increase the value of your home, and we are proud to offer a network of dealers throughout the country to help make your experience everything you imagine. We pride ourselves in being dedicated not only to functionality and reliability, but also customer safety. We offer our continual support and guidance to help you achieve the maximum benefit and enjoyment from your Kozy Heat gas fireplace.

Jim Hussong
President

Dudley Hussong
Board Chairman

Homeowner Reference Information

We recommend you record the following information:

Model Name: _____ Date purchased/installed: _____

Serial Number: _____ Location of fireplace: _____

Dealership Purchased from: _____ Dealer phone: _____

Notes: _____

_____

_____

_____

TABLE OF CONTENTS

HOMEOWNER REFERENCE INFORMATION 3
TABLE OF CONTENTS 5
1.0 INTRODUCTION 7
1.1 Appliance Certification 7
1.2 California Proposition 65 Warning 7
1.3 Requirements for the Commonwealth of Massachusetts 7
2.0 SPECIFICATIONS 8
2.1 Heating Specifications 8
2.2 Electrical Specifications 8
2.3 Appliance Dimensions 9
2.4 Safety Barrier Dimensions 10
3.0 FRAMING 11
3.1 Appliance Placement Considerations 11
3.2 Floor Support and Protection 11
3.3 Stand-off Assembly and Installation 12
3.4 Nailing Flange Assembly and Installation 12
3.5 Clearances to Combustibles 13
3.6 Wall Enclosure Rough Opening 14
3.7 Vent Termination Framing 15
3.8 Outdoor Covered Fireplace Installation 17
4.0 FACING AND FINISHING 19
4.1 Facing and Finishing Requirements 19
4.2 Finishing Trim Kit Assembly #B36-FTK 22
4.3 Exterior Trim Kit Assembly 23
4.4 Safety Barrier Installations 24
5.0 GAS LINE CONNECTION 26
5.1 Gas Conversion (sold separately) 26
5.2 Gas Line Installation 26
6.0 TERMINATION LOCATIONS 27
6.1 Vertical Vent Cap Termination 27
6.2 Minimum Termination Clearances 28
7.0 VENTING 29
7.1 Rear Vent Conversion Instructions 29
7.2 Approved Vent Systems 31
7.3 Venting Requirements 31
7.4 Restrictor Assembly and Installation 32
7.5 Vent Heat Shield Assembly Installation 33
7.6 Coaxial Rigid Pipe Venting Configurations 34
7.7 Class A Chimney/Masonry Chimney Conversion 39
7.8 Coaxial to Co-Linear Chimney Conversion 40
7.9 #700-2 Series Direct Vent Termination Kit(s) 41
8.0 FIREPLACE SETUP 42
8.1 Glass Frame Assembly 42
8.2 Bottom Frame Removal and Installation 42
8.3 Glass Media 43
8.4 Control Board Removal and Installation 44
9.0 ELECTRICAL INFORMATION 45
9.1 Electrical Specifications 45
9.2 Wiring Requirements 45
9.3 Light Kit 46
9.4 #IPI-075 Optional Fan Kit 46
10.0 OPERATING INSTRUCTIONS 47
10.1 Setup Proflame 2 IFC Module 48
10.2 Initialize the Control System 48
10.3 Reset the System for Manual Operation 48
10.4 Automatic Safety Restart 48
10.5 Backup Battery Operation 48
10.6 Control System 7 Day Timeout 48
10.7 IFC Module Ignition Sequence 49
10.8 Additional Diagnostic Information 49
10.9 Remote Control Operation 50
11.0 ADJUSTMENT 53
11.1 Pressure Testing 53
11.2 Flame Appearance Adjustments 54
12.0 TROUBLESHOOTING 56
13.0 MAINTENANCE 58
13.1 Firebox 58
13.2 Fan 58
13.3 Vent System 58
13.4 Glass Assembly 58
13.5 Burner and Pilot System 59
14.0 REPLACEMENT PARTS LIST 60
LIMITED LIFETIME WARRANTY 61

1.0 INTRODUCTION

1.1 Appliance Certification

Laboratory: PFS in Cottage Grove, Wisconsin

Standards:

ANSI Z21.88-2017/CSA 2.33-2017, Vented Gas Fireplace Heaters

CSA 2.17 2017, Gas-Fired Appliances for Use at High Altitudes

This installation must conform with local codes, or in the absence of local codes, with the National Fuel Gas Code, ANSI Z223.1/NFPA 54, or the Natural Gas and Propane Installation Code, CSA B149.1.

1.2 California Proposition 65 Warning

WARNING: This product can expose you to chemicals including Carbon Monoxide, that is an externally vented by-product of fuel combustion, which is [are] known to the State of California to cause cancer, birth defects, or other reproductive harm. For more information, visit www.P65Warnings.ca.gov.

1.3 Requirements for the Commonwealth of Massachusetts

The following requirements reference various Massachusetts and national codes not contained in this manual.

For all sidewall horizontally vented gas fueled equipment installed in every dwelling, building or structure used in whole or in part for residential purposes, including those owned or operated by the Commonwealth and where the side wall exhaust vent termination is less than (7) feet above finished grade in the area of the venting, including but not limited to decks and porches, the following requirements shall be satisfied:

1.3.1 Installation of Carbon Monoxide Detectors

At time of installation of side wall horizontally vented gas fueled equipment, the installing plumber or gas-fitter shall observe that a hard wired carbon monoxide detector with an alarm and battery back-up is installed on the floor level where the gas equipment is to be installed. In addition, the installing plumber or gas-fitter shall observe that a battery operated or hard wired carbon monoxide detector is installed on each additional level of the dwelling, building or structure served by the side wall horizontal vented gas fueled equipment. It shall be the responsibility of the property owner to secure the services of qualified licensed professionals for the installation of hard wired carbon monoxide detectors.

In the event that the side wall horizontally vented gas fueled equipment is installed in a crawl space or attic, the hard wired carbon monoxide detector with alarm and battery back-up may be installed on the next adjacent floor level. In the event that the requirements of this subdivision can not be met at the time of completion of installation, the owner shall have a period of thirty (30) days to comply with the above requirements; provided, however, that during said thirty (30) day period, a battery operated carbon monoxide detector with an alarm shall be installed.

1.3.2 Approved Carbon Monoxide Detectors

Each carbon monoxide detector as required in accordance with the above provisions shall comply with NFPA 720 and be ANSI/UL 2034 listed and IAS certified.

1.3.3 Signage

A metal or plastic identification plate shall be permanently mounted to the exterior of the building at a minimum of eight (8) feet above grade directly in line with the exhaust vent terminal for the horizontally vented gas fueled heating appliance or equipment. The sign shall read, in print no less the one-half inch (½") in size, "GAS VENT DIRECTLY BELOW. KEEP CLEAR OF ALL OBSTRUCTIONS".

1.3.4 Inspection

The state or local gas inspector of the side wall horizontally vented gas fueled equipment shall not approve the installation unless, upon inspection, the inspector observes carbon monoxide detectors and signage installed in accordance with the provisions of 248 CMR 5.08 (2) (a) 1 through 4.

1.3.5 Exemptions

The following equipment is exempt from 248 CMR 5.08 (2) (a) 1 through 4: The equipment listed in Chapter 10 entitled "Equipment Not Required To Be Vented" in the most current edition of NFPA 54 as adopted by the Board; and Product Approved side wall horizontally vented gas fueled equipment installed in a room or structure separate from the dwelling, building or structure used in whole or in part for residential purposes.

1.3.6 Manufacturer Requirements

1.3.6.1 Gas Equipment Venting System Provided

When the manufacturer of Product Approved side wall horizontally vented gas equipment provides a venting system design or venting system components with the equipment, the instructions provided by the manufacturer for installation of the equipment and the venting system shall include:

- Detailed instructions for the installation of the venting system design or the venting system components; and
- A complete parts list for the venting system design or venting system.

1.3.7 Gas Equipment Venting System NOT Provided

When the manufacturer of Product Approved side wall horizontally vented gas equipment does not provide the parts for venting the flue gases, but identifies "special venting systems", the following requirements shall be satisfied by the manufacturer:

- The referenced "special venting systems" instructions shall be included with the appliance or equipment installation instructions and;
- The "special venting systems" shall be Product Approved by the Board, and the instructions for that system shall include a parts list and detailed installation instructions.

A copy of all installation instructions for all Product Approved side wall horizontally vented gas fueled equipment, all venting instructions, all parts lists for venting instructions, and/or all venting design instructions shall remain with the appliance or equipment at the completion of the installation.

2.0 SPECIFICATIONS

2.1 Heating Specifications

	Natural Gas	Propane
Maximum Input Rating	26,500 Btu/h (7.6 kW)	26,500 Btu/h (7.6 kW)
Minimum Input Rating	14,000 Btu/h (4.1 kW)	14,000 Btu/h (4.1 kW)
Manifold Pressure (High)	3.8" WC (0.95 kPa)	11" WC (2.74 kPa)
Manifold Pressure (Low)	1.1" WC (0.27 kPa)	2.9" WC (.72 kPa)
Orifice Size (DMS)	#43	#53

2.1.1 Altitude Adjustment

This appliance may be installed at higher altitudes. Please refer to National Fuel Gas Code ANSI Z223.1/NFPA 54, CSA-B149.1 Natural Gas and Propane Installation Code, local authorities, or codes having jurisdiction in you area regarding derate guidelines.

2.1.1.1 US Installations

Refer to the American Gas Association guidelines for the gas designed appliances derating method. For elevations above 2,000' (610m), input ratings are to be reduced by 4% for each 1,000' (305m) above sea level.

2.1.1.2 Canadian Installations

When the appliance is installed at elevations above 4,500' (1,372m), the certified high altitude rating shall be reduced at the rate of 4% for each additional 1,000' (305m).

2.2 Electrical Specifications

- The junction box in this appliance requires 120VAC, 60Hz, and 6 Amps.
- Verify the household breaker is shut off prior to working on any electrical lines.
- The AC power supply to this appliance must be hot at all times and shall not have a switch installed in it.

2.3 Appliance Dimensions

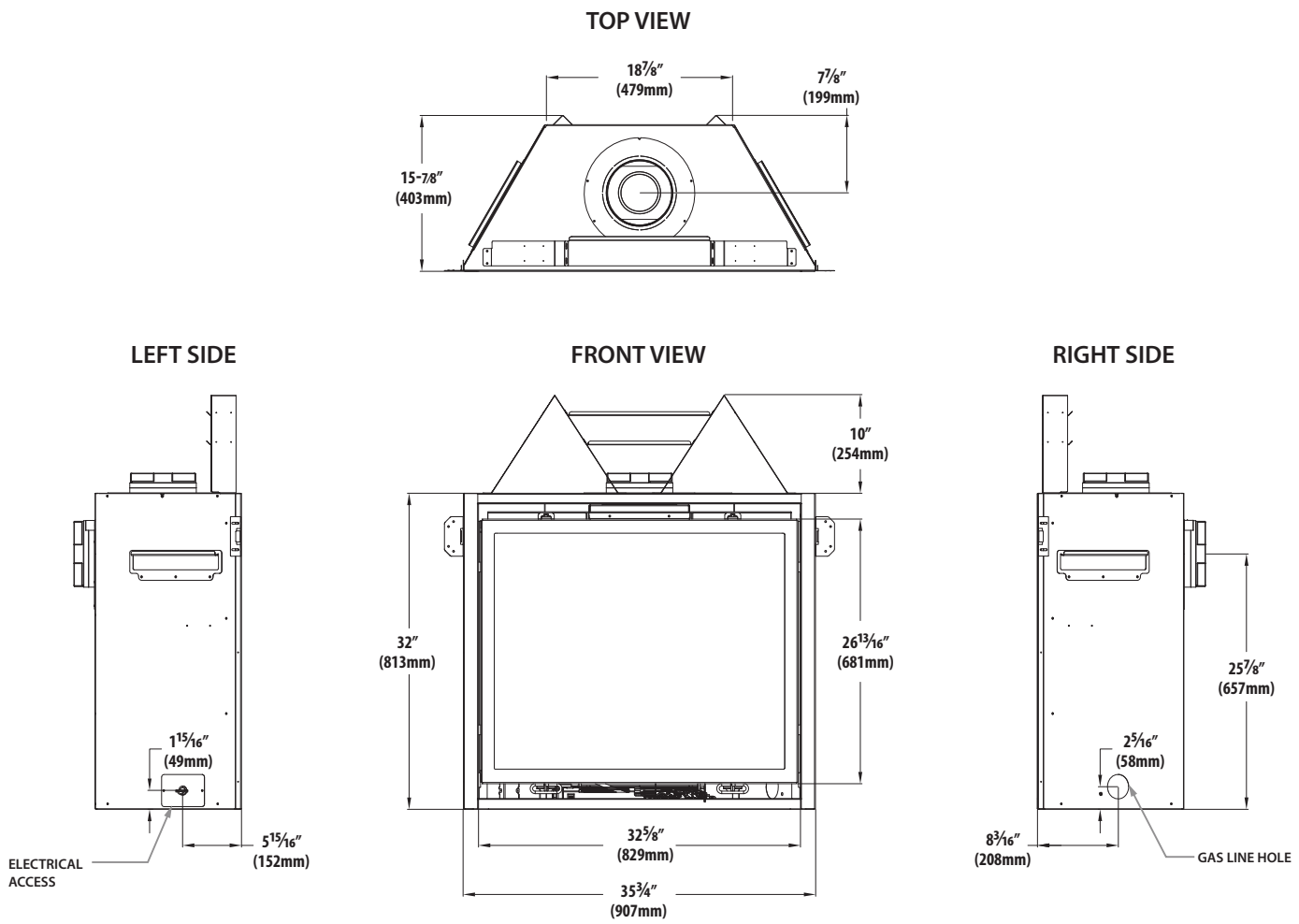

Figure 2.1, Appliance Dimensions

2.4 Safety Barrier Dimensions

WARNING: A barrier designed to reduce the risk of burns from the hot viewing glass is provided with this appliance and shall be installed for the protection of children and other at-risk individuals.

If the barrier becomes damaged, the barrier shall be replaced with Hussong Mfg.'s barriers for this appliance.

IMPORTANT: Consider the height of hearth finish material when building a fireplace platform. Proper installation of safety barriers require the bottom of the fireplace to be level with finished hearth.

NOTE: Safety screen B36-PTF2 requires the fireplace to be 3" (76mm) above the hearth and 3" (76mm) clearance from the outside edge to a sidewall.

Refer to Section 4.4 Safety Barrier Installations on page 24 for installation and mounting options.

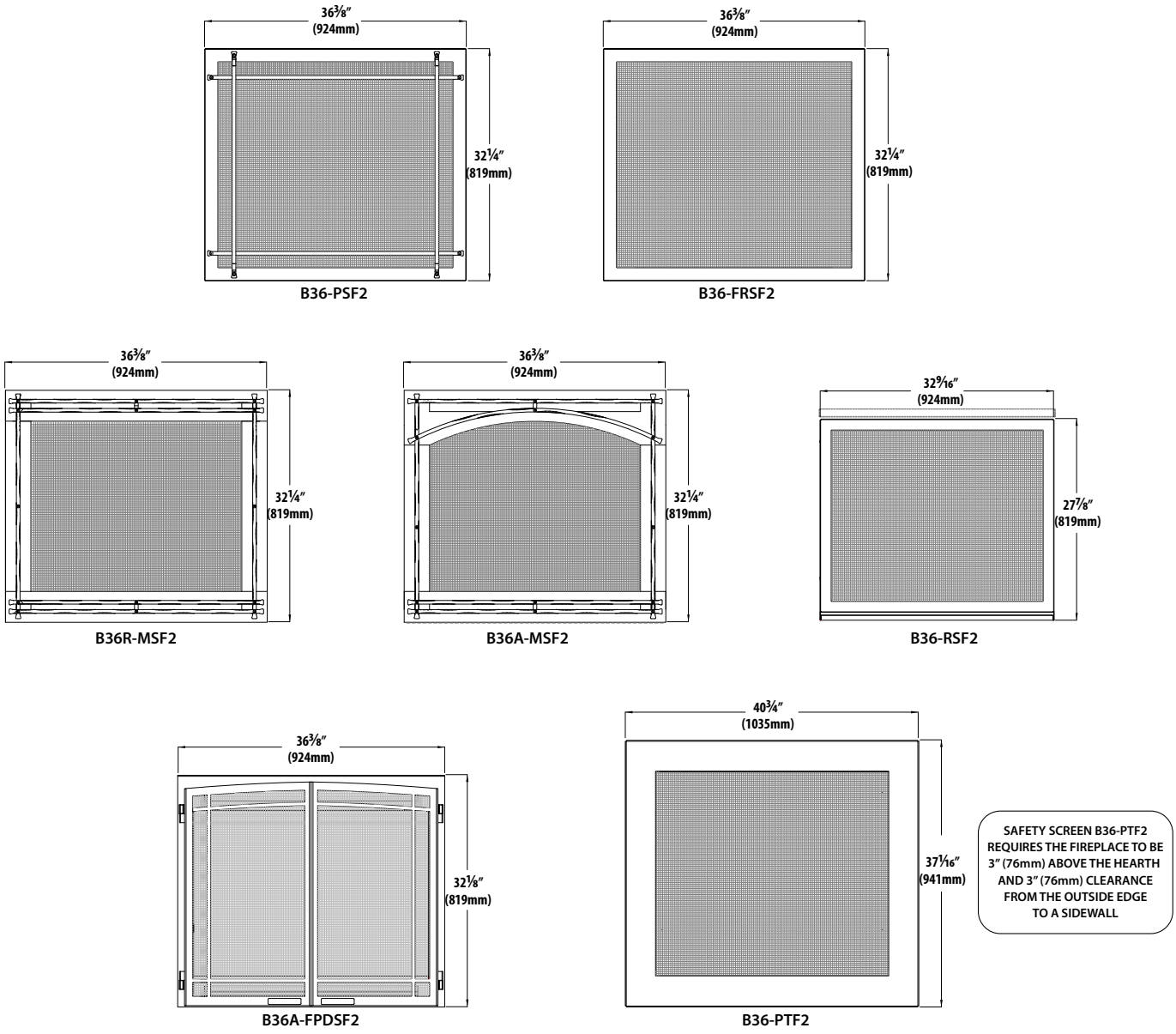

Figure 2.2, Safety Barrier Dimensions

3.0 FRAMING

3.1 Appliance Placement Considerations

WARNING: Due to high temperatures, the appliance should be located out of traffic and away from furniture and draperies.

FIRE HAZARD: Do NOT install this appliance directly on carpeting, vinyl, or any other combustible material other than wood.

- This appliance must be installed on a level surface capable of supporting the fireplace and venting.
- Determine the exact position of your fireplace. Consider the hearth width, height and depth, if applicable for your installation.
- Please be aware of the large amount of heat this fireplace will produce when determining a location.

3.2 Floor Support and Protection

- Floor protection in front of the fireplace is not required. Combustible material may be used if installing a hearth extension. Consider the thickness of the hearth extension finishing material if building a fireplace platform. The bottom of the fireplace must be level with finished hearth extension for proper fit of a safety barrier.
- If installing safety barrier #B36-PFT2, the fireplace must be 3" (76mm) above the finished hearth for proper fitting.
- If this appliance is to be installed directly on carpeting, tile, or other combustible material other than wood flooring, this appliance shall be installed on a metal or wood panel extending the full width and depth of the appliance.
- If the appliance is to be installed above floor level, a solid, continuous platform must be constructed below the appliance.

3.3 Stand-off Assembly and Installation

WARNING: The top stand-offs provide the minimum clearance to the header. Use only non-combustible material in this area for the entire width of the fireplace. DO NOT use wood, sheetrock, et cetera, in this zone.

Top stand-off brackets must be formed and attached prior to positioning fireplace into framed opening.

NOTE: If installing a trim kit assembly, please refer to Section 4.0 Facing and Finishing on page 19.It is easier to install the trim kits with the stand-off assemblies and nailing flanges.

1. Remove and save (4) screws securing stand-off heat shields and stand-off brackets on top of the fireplace.
2. Form each top stand-off bracket by bending at perforations, as shown.
3. Align the holes in the formed top stand-offs with the holes in the fireplace top. Secure with the (4) screws previously removed along with (4) screws located on top of the fireplace.
4. Form stand-off heat shields as shown. The flange will face up and to the back of the fireplace.
5. Align the holes in the stand-off heat shields with the holes in the top stand-off brackets. Secure with (8) screws provided in the fireplace components packet.

3.4 Nailing Flange Assembly and Installation

CAUTION: Never permanently remove these assemblies from the fireplace—they must be secured regardless of finish material used.

1. Remove (2) nailing flanges from the right and left side of the fireplace.
2. Align nailing flange with holes on outside corners of fireplace, with the stand-off flanges on the nailing flanges facing away from the fireplace
3. Secure the nailing flanges to the fireplace with screws (provided) through the slots in nailing flanges.
4. Bend perforation on nailing flange until parallel with fireplace face. Do not bend toward fireplace face.
5. **UNTIL ALL FRAMING REQUIREMENTS ARE COMPLETE:** Position framing stud against the small stand-off (located on backside of nailing flange). Secure with nails or screws.

- **When installed, the nailing flanges provide the minimum ¼" (6mm) clearance from the sides of the fireplace to framing.**

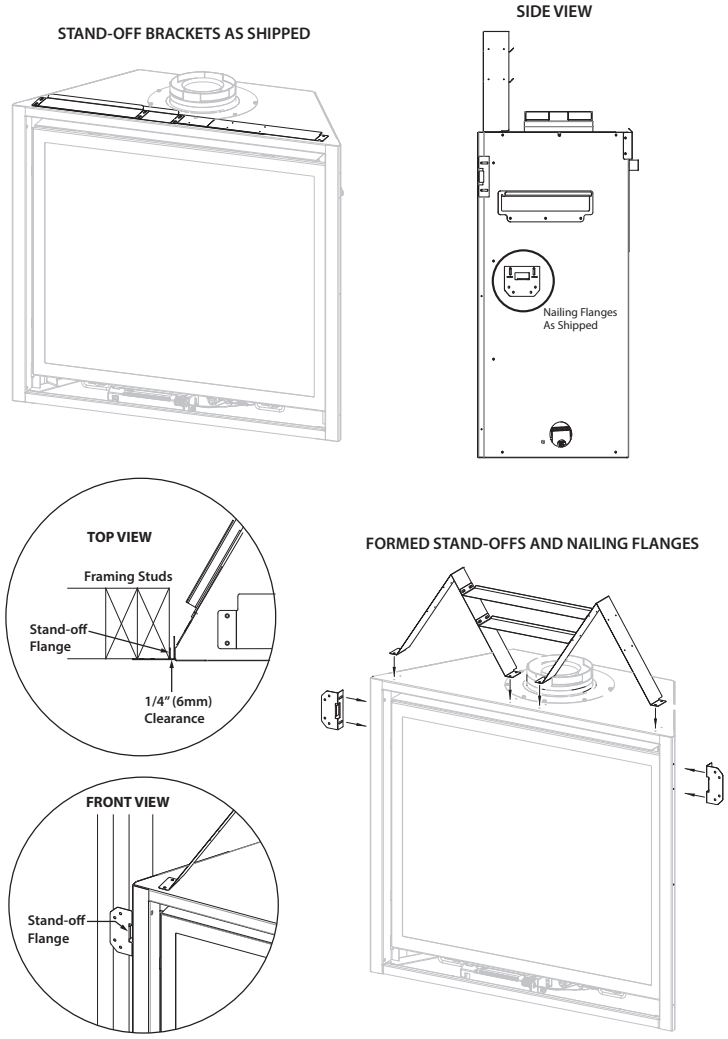

Figure 3.1, Nailing Flange and Stand-off Assembly and Installation

3.5 Clearances to Combustibles

Table 3.1, Minimum Appliance Clearances to Combustible Material		
From appliance top stand-offs	0″	0mm
From appliance left and right side stand-offs	0″	0mm
From appliance back stand-offs	0″	0mm
From appliance corners	1/4″	6mm
From appliance front	36″	914mm
From appliance top to ceiling	30″	762mm
Appliance sides to adjacent sidewall	3/4″	19mm
Top of appliance to 3/4″(19mm) trim	4-1/2″	108mm
Mantel 6″(152mm) deep from appliance top	8″	203mm
Rough opening height	42″	1067mm
Rough opening width	36-1/4″	920mm
Rough opening depth (includes 1/2″ [13mm] typical finish material with flush mount)	15-7/8″	403mm

Nominal 2″x 4″ framing used in enclosure framing

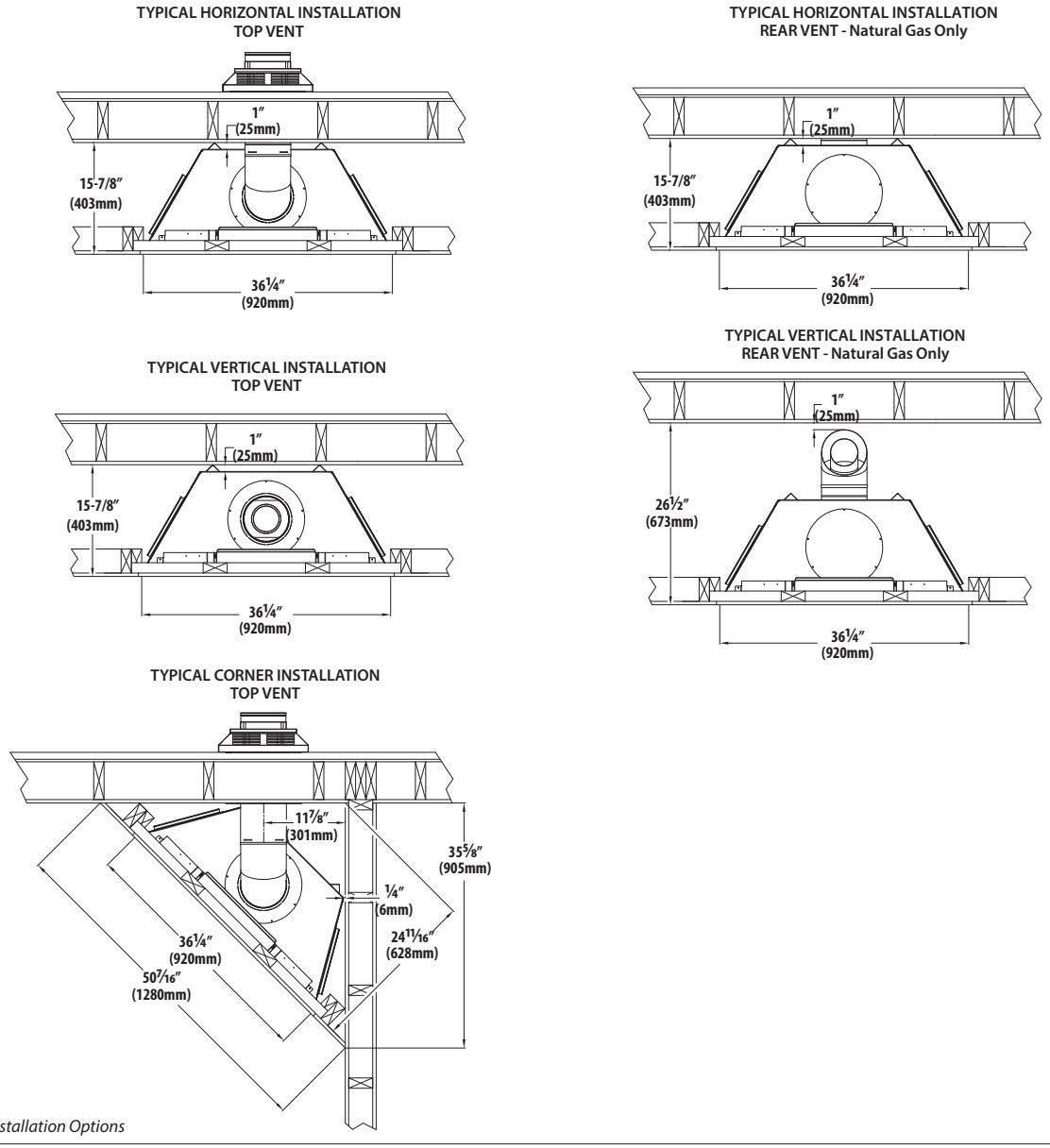

Figure 3.2, Typical Installation Options

3.6 Wall Enclosure Rough Opening

WARNING: Provide adequate clearance in front of the fireplace for barrier removal, component access, gas line installation, service access, etc.

NOTE: The construction of the fireplace wall enclosure must comply with local building codes and all clearances as outlined in this manual.

NOTE: Cold air transfer area. The fireplace wall enclosure should be constructed in a manner to prevent cold air from entering the room and outside walls should be insulated.

- **METAL-FAB VENT SYSTEM:** If installing Metal-Fab vent pipe, adapter #4DDA must be used. If rear venting, increase the minimum depth for the wall enclosure rough opening by 3-3/4" (95mm) in order to maintain the required vent pipe clearances.
- Framing dimensions should allow for wall covering thickness and fireplace facing materials. If using a hearth, adjust the rough opening size as necessary to maintain minimum clearance requirements.
- If masonry (optional) is to be used, prepare the foundation necessary for the full masonry load.

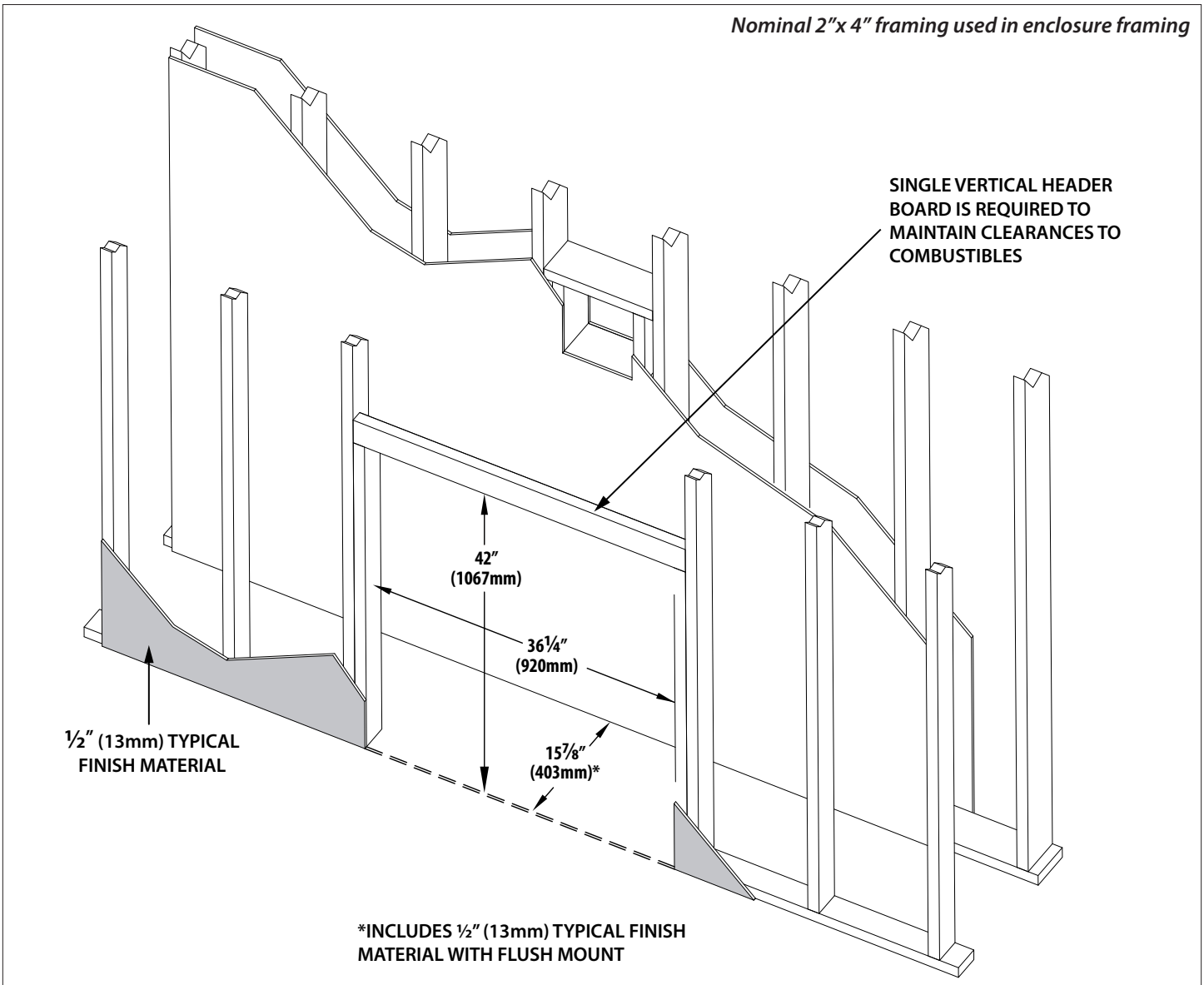

Figure 3.3, Framing Dimensions

3.7 Vent Termination Framing

3.7.1 Vent Termination Framing Requirements

This is a cold air transfer area. The fireplace enclosure must comply with all clearances as outlined in this manual, and be constructed in compliance with local building codes. Outside walls should be insulated to prevent cold air from entering room.

Exterior vent termination location must be in compliance with Section 6.2 Minimum Termination Clearances on page 28.

IMPORTANT - METAL FAB VENT SYSTEM: When installing Metal Fab vent pipe, adapter #4DDA must be used off the top or rear of the appliance. This will increase the minimum height for the center of the vent pipe by 3-3/4" (95mm) when framing the wall pass through. For rear venting, the minimum depth enclosure must be increased by 3-3/4" (95 mm) to keep with minimum clearance requirements.

3.7.1.1 Clearances

- A minimum of 1" (25mm) clearance on all sides of the vertical vent pipe must be maintained.
- A minimum of 1" (25mm) clearance from the top surface on the horizontal pipe must be maintained.
- A minimum of 1" (25mm) clearance on the sides and bottom surfaces on the horizontal pipe must be maintained.

3.7.2 Vertical Terminations

Follow vent pipe manufacturer's installation instructions for vertical terminations.

- Attic insulation shields may be insulated using unfaced insulation products listed as non-combustible per ASTM E 136.

3.7.3 Horizontal Terminations

WARNING: Do not recess the vent cap into wall or siding.

IMPORTANT: Horizontal vent sections require 1/4" (6mm) rise for every 12" (305mm) of travel for natural draft applications.

Elbows listed with approved vent systems for this appliance vary in vertical length. Please consult the vent manufacturer's instructions to determine the elbow dimension used for installation. Adjust the wall pass-through rough opening dimensions to maintain clearance requirements.

Kozy Heat's #700-WPT, or wall thimble products that comply with the required 1" (25mm) top clearance to combustibles, must be installed for all horizontal vent runs that pass through interior or exterior walls. These wall thimble products may be insulated using unfaced insulation products listed as noncombustible per ASTM E 136.

- 700-WPT wall thickness covers 4" (101mm) to 6½" (165mm).

3.7.3.1 Wall Pass Through Information and Framing

1. Measure from floor level of the fireplace to the center of where the vent pipe will penetrate the wall.
2. Cut and frame an opening in the wall to allow the vent system to run level through the wall pass-through.
3. Follow the vent pipe manufacturer's installation instructions for natural draft vent installation.

- Rigid vent pipe dimensions in Figure 3.4 reflect DuraVent 4" x 6-5/8" coaxial pipe venting system.
- Rigid vent pipe dimensions are tested with listed Simpson Duravent pipe. Other manufacturers product dimensions may vary.
- Flexible vent pipe framing dimensions are tested with Kozy Heat #700-2 Series Flexible Vent System. See Figure 3.4 on the following page.

Nominal 2"x 4" framing used in enclosure framing

Minimum Horizontal Venting
Top Vent - Natural Gas & Propane

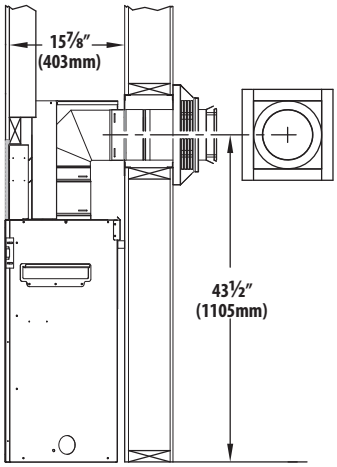

Minimum Horizontal Venting
Rear Vent - Natural Gas Only

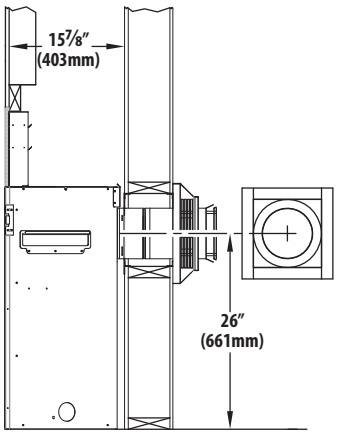

Minimum Horizontal #700-2 Venting
Top Vent (only) - Natural Gas & Propane

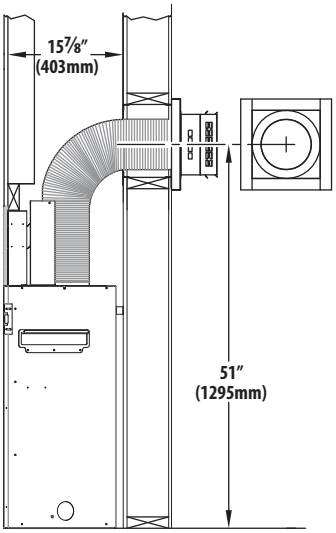

700-WPT Framing Dimensions
Ships with #700-2

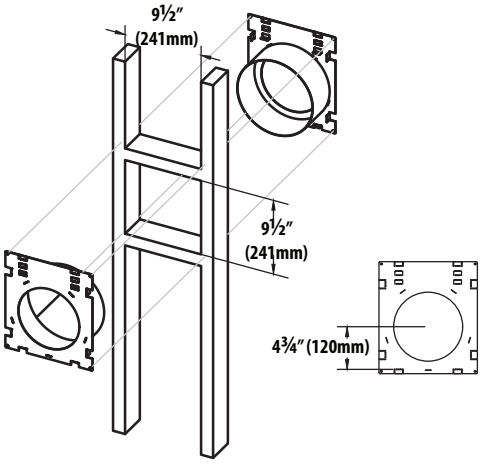

Figure 3.4, Minimum Horizontal Venting

3.8 Outdoor Covered Fireplace Installation

An outdoor covered fireplace installation allows a fireplace to be installed in an outdoor covered area, where the appliance is protected from direct precipitation.

Follow the instructions and illustrations in this section for installation procedures.

3.8.1 Safety Screen Barriers

Hussong Mfg. highly recommends to use black painted safety barriers in outdoor installations. Other screen barriers that incorporate a plated or patina finish are highly susceptible to oxidation and discoloration.

3.8.2 Requirements

- The continuous insulated building envelope and weatherproof membrane are not to be interrupted by fireplace installation. See Figure 3.6 on the following page.
- Fireplace operation is approved from 40°F to 110°F.
- All wiring connections shall be in accordance with outdoor requirements of NECA NFPA 70.
- All clearances and requirements in your appliance manual must be adhered to.

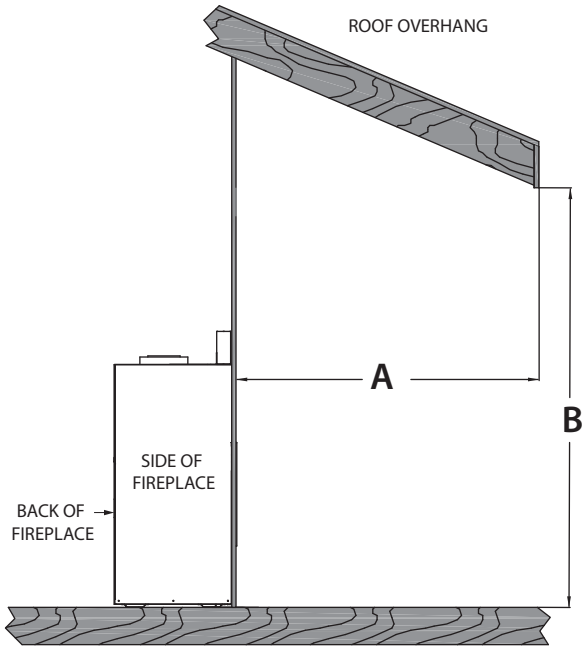

The overhang (A) must be a minimum of 1/2 or greater of the roo˜ine elev ation (B) above the base of the ÿreplace.

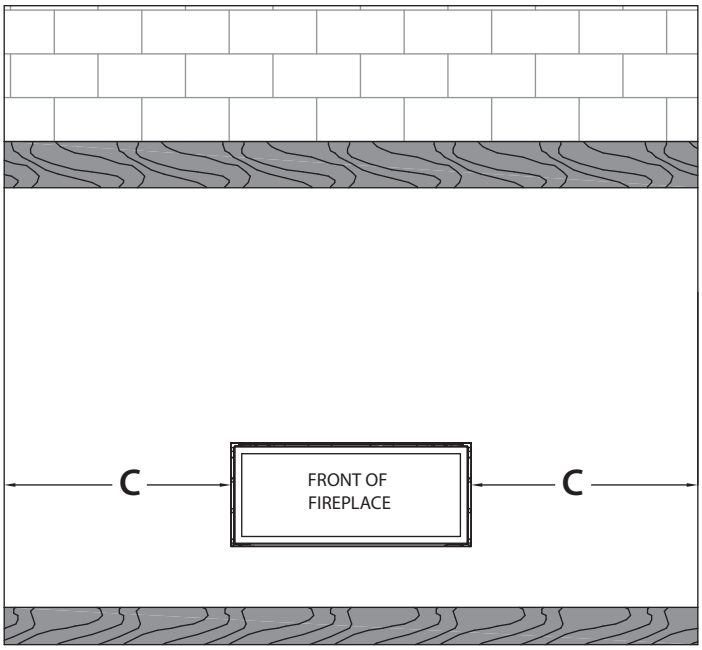

The width of the overhang to each side of the appliance (C) must be a minimum of 1/2 or greater of the roo˜ine elev ation (B) above the base of the ÿreplace.

EXAMPLE: If roo˜ine (B) is 10′ above the base of ÿreplace, the overhang (A) must be 5′ or greater. The width of the overhang to EACH side of the ÿreplace (C) must be 5′ or greater.

Figure 3.5, Outdoor Covered Fireplace Install- 1

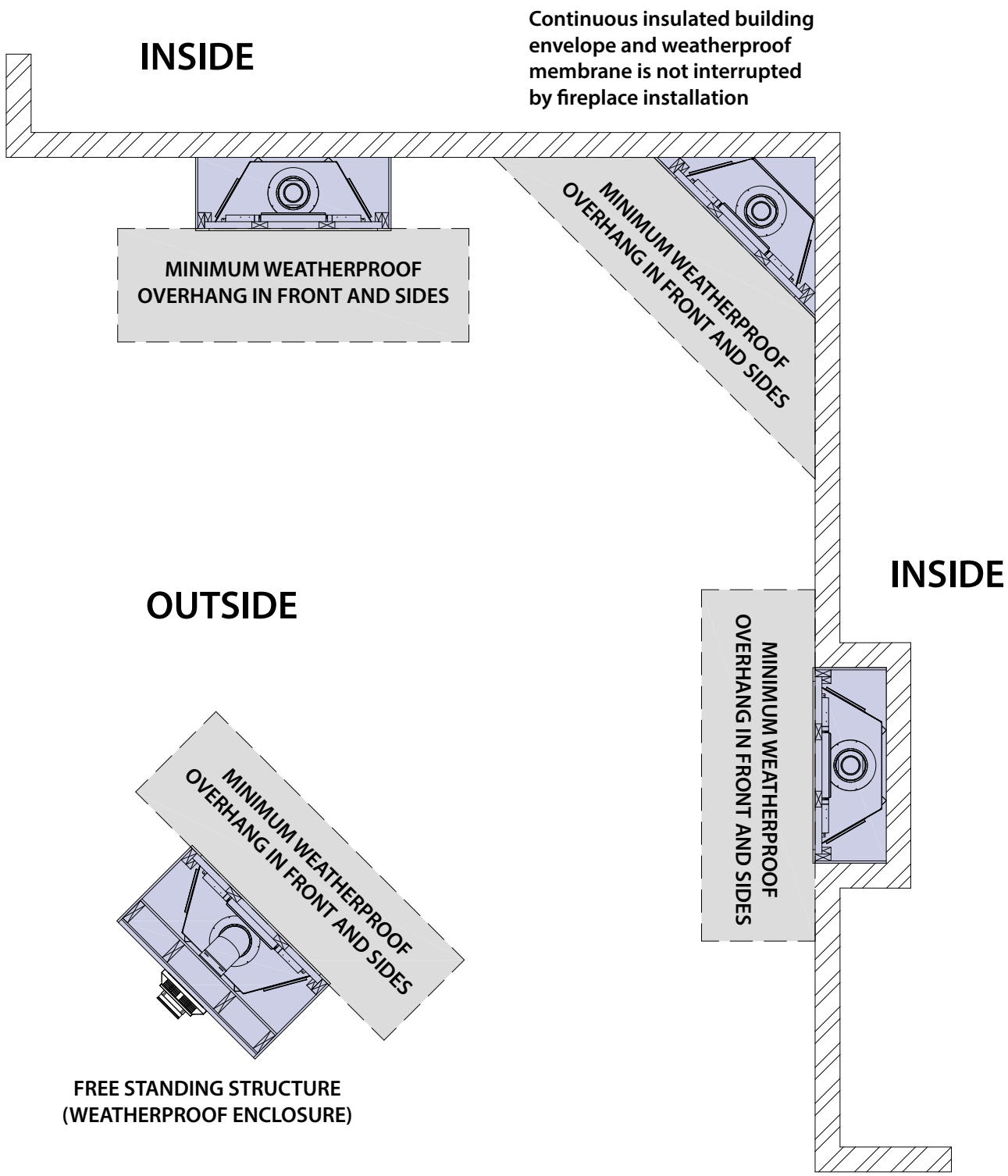

Figure 3.6, Outdoor Covered Fireplace Install - 2

4.0 FACING AND FINISHING

4.1 Facing and Finishing Requirements

4.1.1 Mantel Requirements

WARNING: All minimum clearances to combustible material MUST be maintained.

Combustible Mantel Projections: As referenced in Figure 4.1 (page 20), the 3/4" (19mm) trim can start at 4-1/2" (108mm) above the top of the appliance with a 6" (152mm) mantel starting at 8" (203mm) above the top of the appliance. Mantel projections can increase 1" (25mm) of depth for every 1" (25mm) of height starting at the 6" (152mm) mantel.

Combustible Mantel Projections FOR B36-RSF2 ONLY: As referenced in Figure 4.2 (page 20), the 3/4" (19mm) trim can start at 1-1/2" (38mm) above the top of the appliance with a 6" (152mm) mantel starting at 5" (127mm) above the top of the appliance. Mantel projections can increase 1" (25mm) of depth for every 1" (25mm) of height starting at the 6" (152mm) mantel.

Non-combustible Mantel Projections: A minimum vertical clearance of 6"(152mm) above the appliance to a maximum 6"(152mm) depth of a non-combustible mantel. Follow projection 1"(25mm) up for every 1"(25mm) deeper.

4.1.2 Adjacent Sidewall Requirements

- The adjacent sidewall must be 3/4" (19mm) from the finishing edge of the fireplace. See Figure 4.3 (page 21).
- If you are installing safety barrier B36-PTF2, you will need a 3" (76mm) clearance from the adjacent sidewall for proper fitting of the safety barrier.

4.1.3 Finishing Recommendations

NOTE: The surface area above the appliance may be affected by high temperatures emitted from this appliance. To help avoid or reduce the possibility of the sheetrock to crack, Hussong Mfg. recommends the following methods:

- Ensure the non-combustible material and sheetrock is dry and dust free.
- For taping and mudding seams, we recommend heat resilient tape, mesh and joint compounds, such as Durabond. Joint compound must be cured as per manufacturer's recommendations.
- For a painted surface, use a high quality acrylic latex primer and finish coat. Avoid flat or light-colored paints to prevent discoloring.

4.1.4 Non-Combustible Zone

- A 37-3/4" x 10-1/2" non-combustible material (board) is supplied with this fireplace. The non-combustible material (board) allows 3/4" overlap onto framing side and 1/2" overlap onto header. See Figure 4.4, BAY-36 Non-Combustible Zone on page 21.
- Natural gas rear vent exit minimum chamber height: 45-1/2" (1556mm).
- Natural gas & propane top vent minimum horizontal vent terminations using rigid pipe: 50" (1271mm).
- Natural gas & propane top vent minimum horizontal vent terminations using flex pipe: 55-1/2" (1410mm).
- Non-combustible facing and finishing materials must meet ASTM E 136.
- WonderBoard brand boards are commonly used as a backerboard for tile. WonderBoard backerboard is not a non-combustible material and is not approved for use in the non-combustible material is required around the fireplace.
- Paper faced gypsum board, commonly known as drywall; including Type X Fire Rated board is not a non-combustible material. This material is not approved for use as a non-combustible material around the fireplace.

4.1.5 Recommended Installation of Marble and other stone materials

Kozy Heat recommends the following statements when using marble, granite, or other stone finishing materials. Never use a one-piece marble, granite or natural stone that is cut in a U-shape for finishing material to cover the sides and top areas around the fireplace opening. If you use a one piece U-shaped piece of marble, or stone finishing material the material is susceptible to cracking due to thermal expansion. Refer to the manufacturer and supplier of your finishing material for use in high heat applications like around a fireplace. Ensure the material can be exposed to temperatures greater than 160°F (71°C). Kozy Heat does not assume any liability for discoloring, cracking, or other heat related damage.

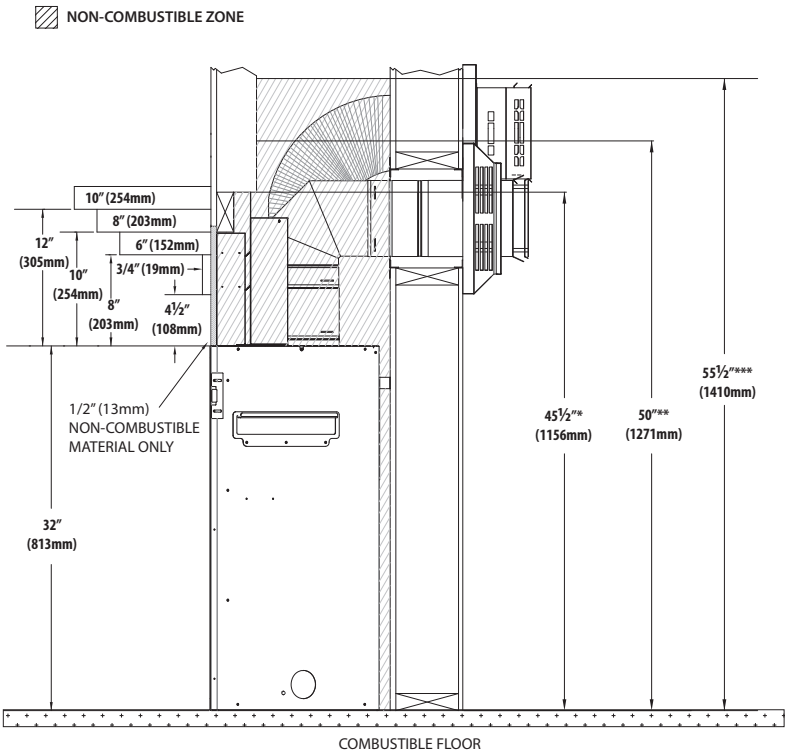

*NON-COMBUSTIBLE ZONE: 45-1/2" (1556mm) minimum chamber height for Natural Gas rear vent terminations
**NON-COMBUSTIBLE ZONE: 50" (1271mm) minimum chamber height for top vent minimum horizontal vent terminations using rigid pipe
***NON-COMBUSTIBLE ZONE: 55-1/2" (1410mm) minimum chamber height for top vent minimum horizontal vent terminations using flex pipe

Figure 4.1, Mantel and Trim Requirements

WARNING! THESE MANTEL CLEARANCES ARE FOR USE WITH SAFETY BARRIER B36-RSF2 ONLY

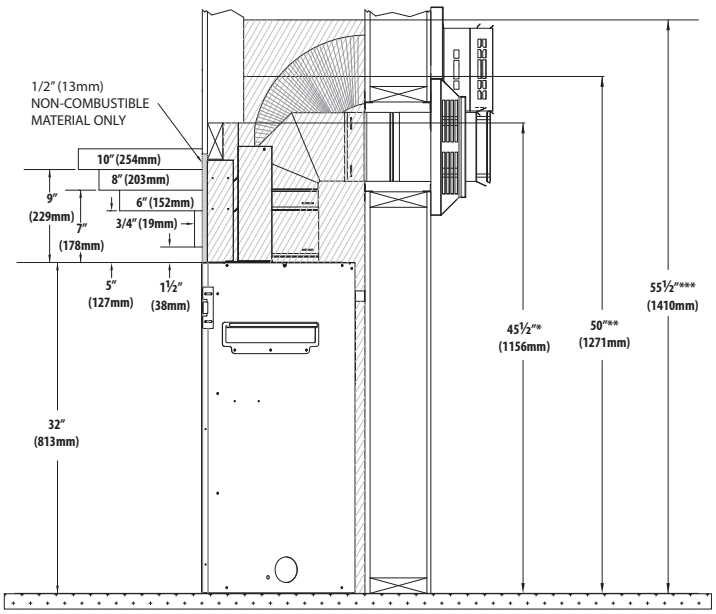

*NON-COMBUSTIBLE ZONE: 45-1/2" (1556mm) minimum chamber height for Natural Gas rear vent terminations
**NON-COMBUSTIBLE ZONE: 50" (1271mm) minimum chamber height for top vent minimum horizontal vent terminations using rigid pipe
***NON-COMBUSTIBLE ZONE: 55-1/2" (1410mm) minimum chamber height for top vent minimum horizontal vent terminations using flex pipe

Figure 4.2, B36-RSF2 Mantel Requirements

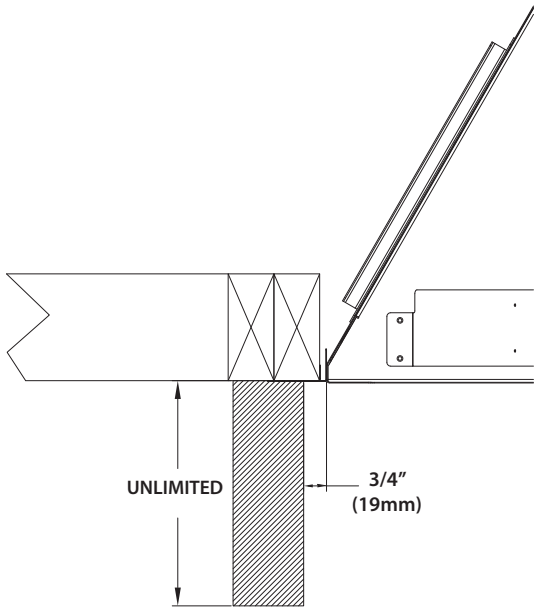

Figure 4.3, Sidewall Clearance

Nominal 2"x 4" framing used

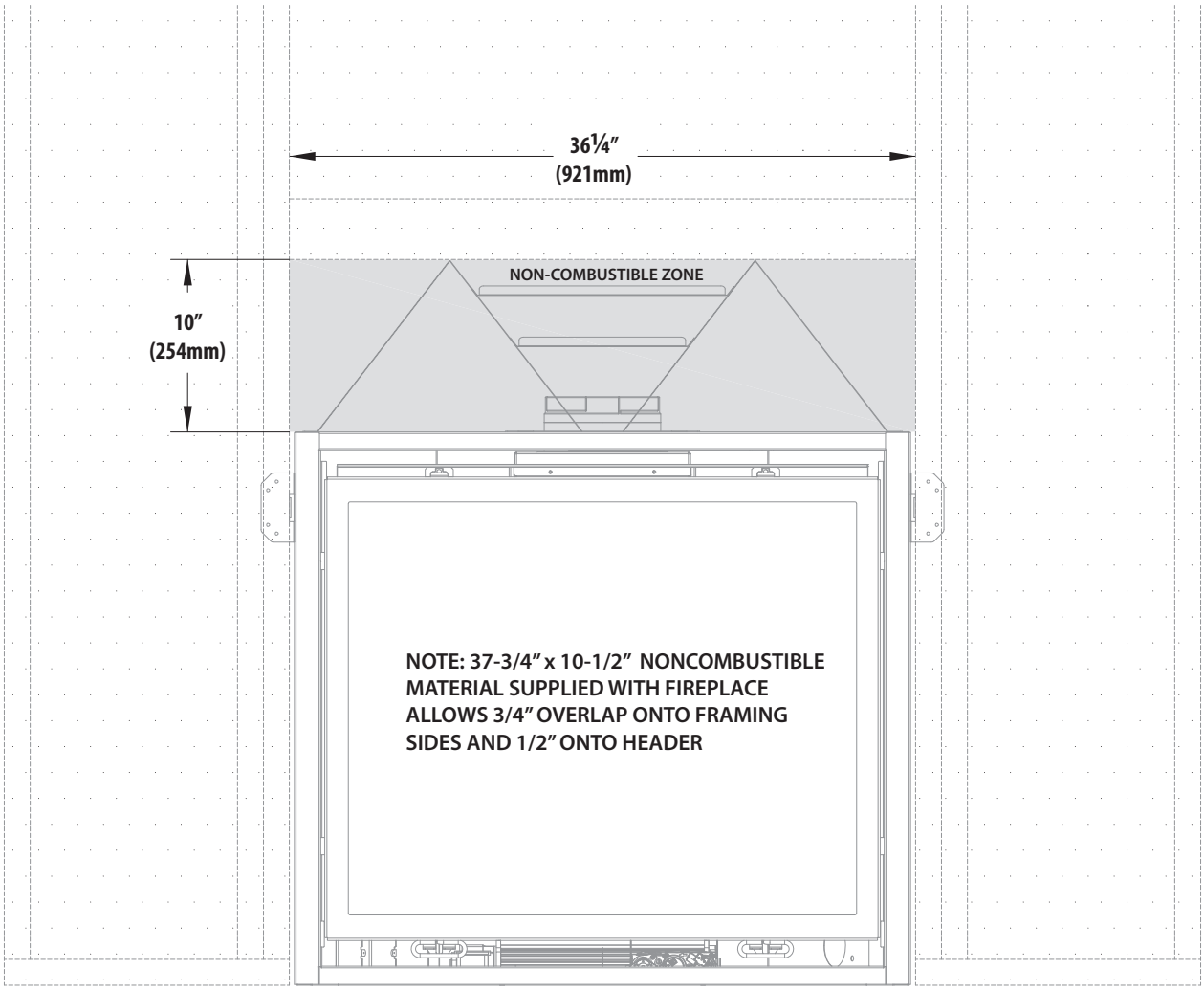

Figure 4.4, BAY-36 Non-Combustible Zone

4.2 Finishing Trim Kit Assembly #B36-FTK

IMPORTANT: This trim kit assembly must be attached before fireplace installation.

NOTE: The top trim panel must be installed with the top stand off brackets.

1. If installed, remove and discard the existing bottom frame piece.
2. Install the bottom trim panel with the flange positioned as shown below.
3. If installed, remove the top stand-offs.
4. Install the top trim panel. Align the holes in the top trim panel with the front holes in the stand-offs and attach to the fireplace top. Secure with the screws previously removed and included in the components packet.
5. If installed, remove the nailing flanges from the sides of the fireplace.
6. Install side trim panels, utilizing the existing screws from the top and bottom sides of the fireplace. Install nailing flanges after trim panels, using screws previously removed. Use screws included in the components packet to complete side panel installation.

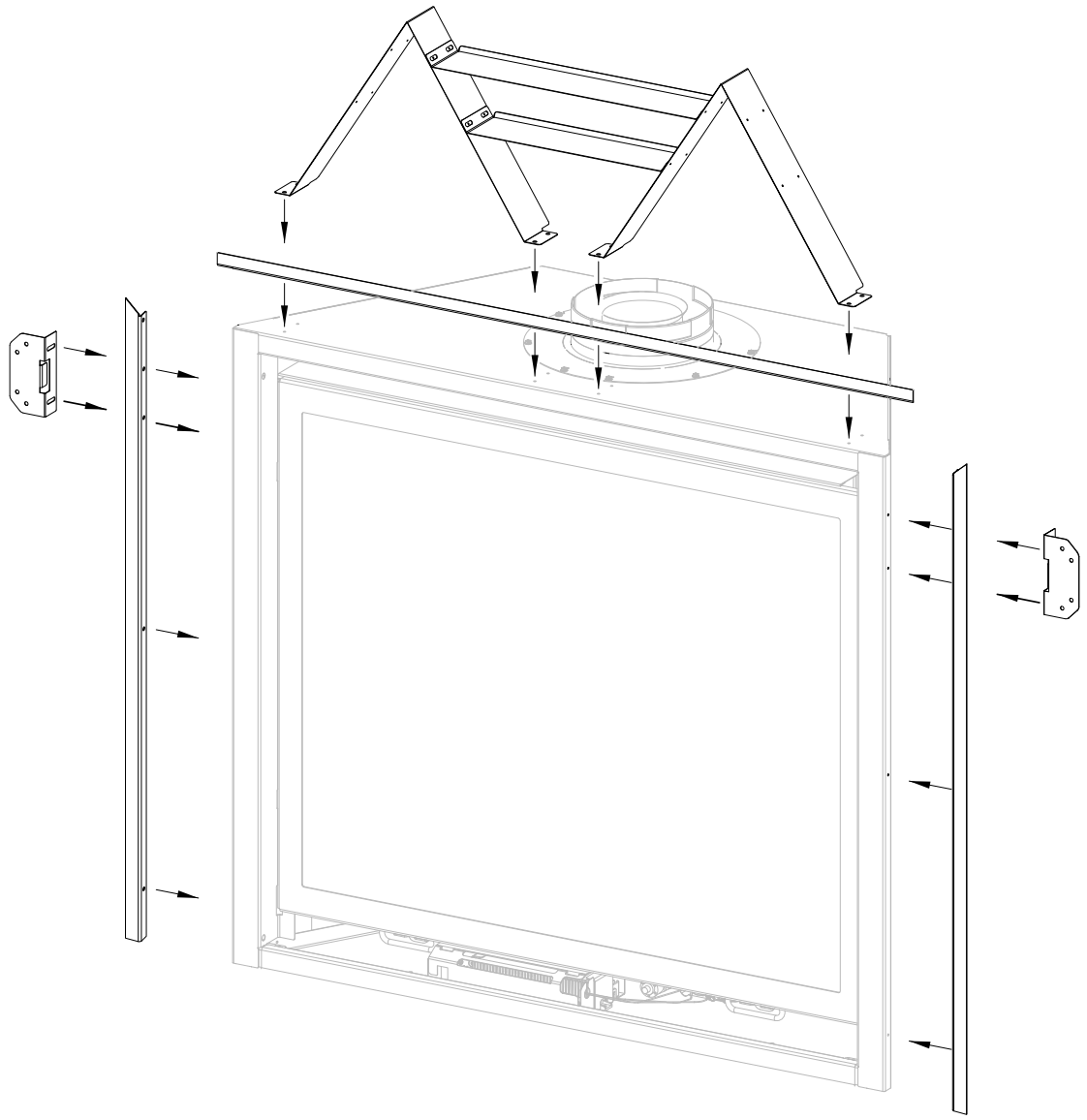

Figure 4.5, Finishing Trim Kit Installation #B36-FTK

4.3 Exterior Trim Kit Assembly

IMPORTANT: This exterior trim kit is supplied with and for use only with safety barrier #B36-RSF2.

IMPORTANT: Exterior trim kit assembly must be attached before fireplace installation.

NOTE: The top trim panel must be installed with the top stand off brackets.

1. If installed, remove the top stand-offs.
2. Install the exterior trim top panel. Align the holes in the top trim panel with the front holes in the stand-offs and attach to the fireplace top. Secure with the screws previously removed and included in the components packet.
3. If installed, remove the nailing flanges from the sides of the fireplace.
4. Install exterior trim side panels, utilizing the existing screws from the top and bottom sides of the fireplace. Install nailing flanges after trim panels, using screws previously removed. Use screws included in the components packet to complete side panel installation.

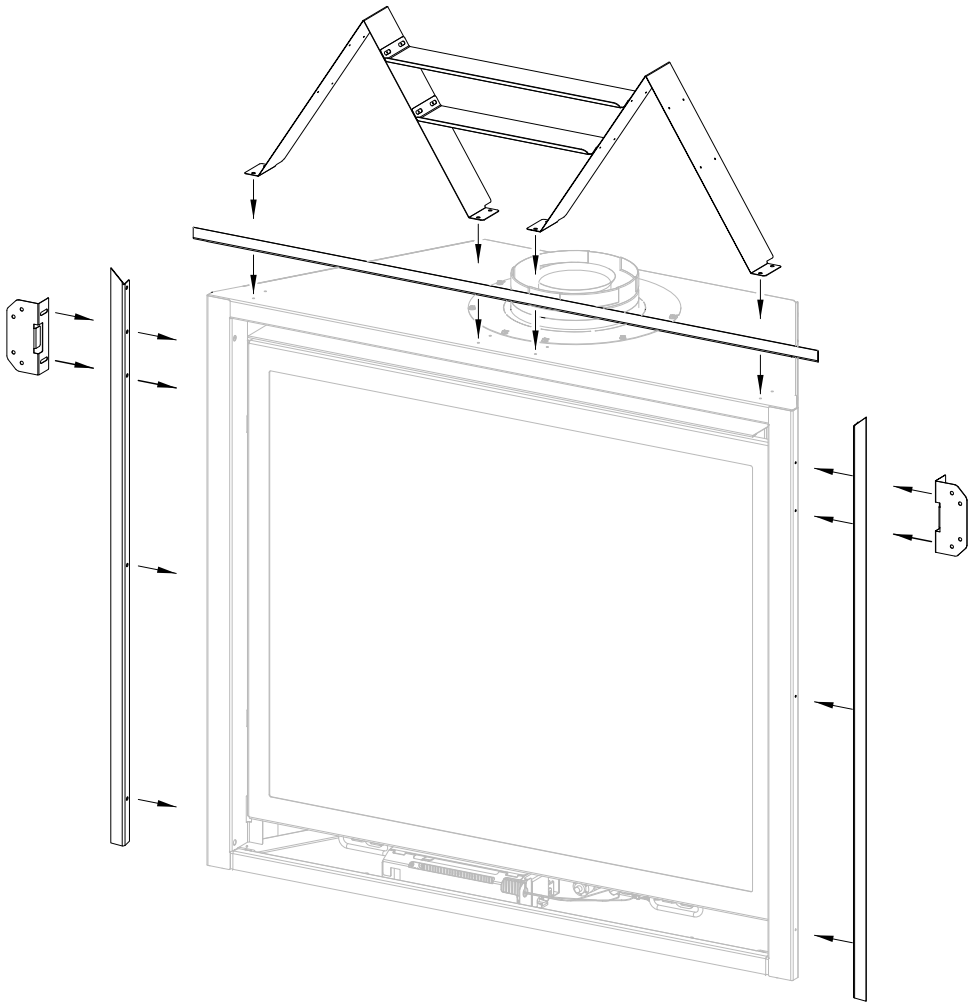

Figure 4.6, Exterior Trim Kit Installation

4.4 Safety Barrier Installations

4.4.1 Inside Fit - Recessed Installation

Model #B36-RSF2

1. Insert the upper hood flange into clips located at the top of the upper air passage. Note: this will be a fairly tight fit.
2. Install the bottom frame piece. Align the hooks on the bottom frame piece to the corresponding holes in the inside flange on each side of the firebox floor. The bottom frame piece is shipped with the unit and must be installed for safety barriers.
3. Center the screen front over the glass frame assembly, allowing the screen front's notched tabs to fit inside the air openings.
4. Align the notched tabs (located on the back) with the slots in the air openings. Raise the screen front slightly and push back into position.
5. Lower the screen front until the notched tabs are firmly in position.

- To remove safety screen: lift the screen up and out of slots.

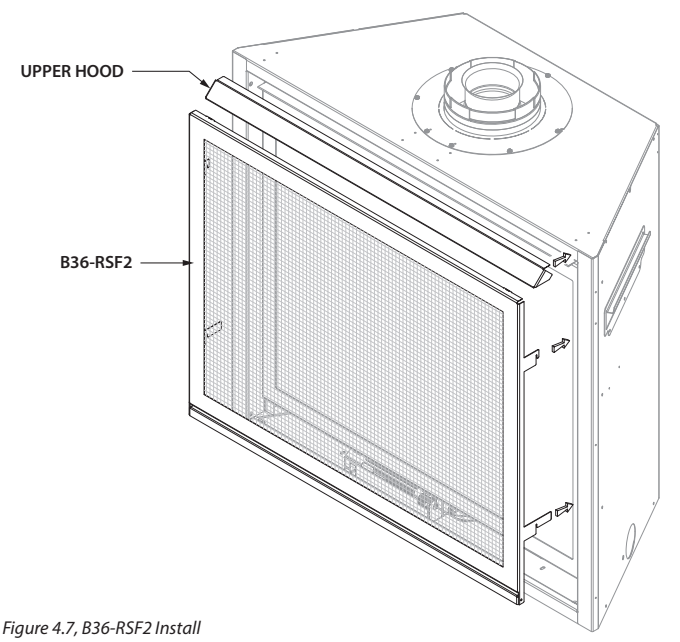

Figure 4.7, B36-RSF2 Install

4.4.2 Overlap Fit - Hanging Installation

IMPORTANT: If there is gasket rope present on the back on the safety screen, ensure the gasket makes contact with the appliance or finishing material. The gasket MUST maintain contact to achieve the mantel clearances listed in this manual.

1. Center the screen front over the glass frame assembly, allowing the screen front's mounting brackets to fit inside the air openings.
2. Align the notched tabs (located on the back) with the slots in the fireplace. Raise slightly and push back to desired position.
3. Lower the screen front until the notched tabs are firmly in position, verifying the depth accommodates finish material.

- To remove safety screen: lift the screen up and out of slots.

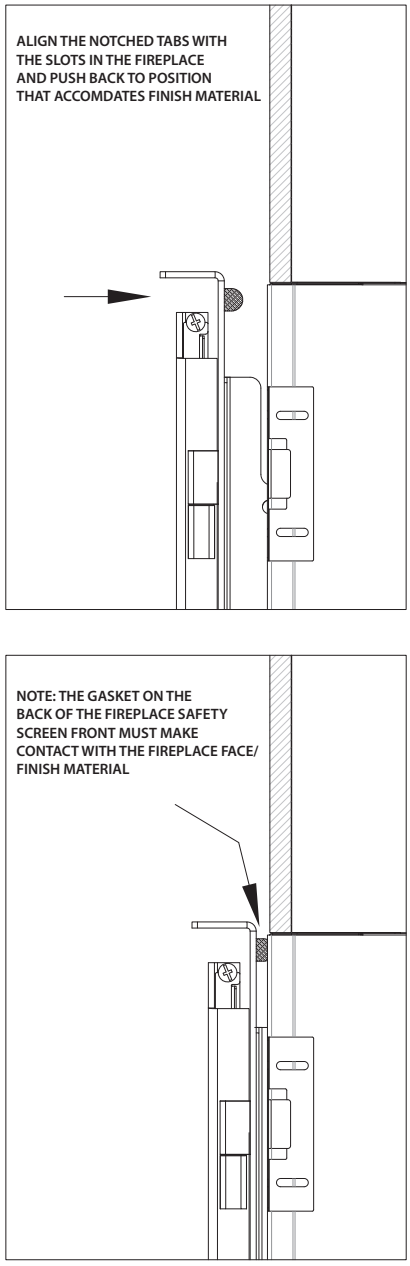

Figure 4.8, Side View Gasket Install

4.4.3 Overlap Fit - Hanging Installation with Adjustable Louvers (Closed Brackets)

Models #B36-PSF2 and #B36-FRSF2

The listed safety barriers are equipped with the louver built into the safety screen face. The hanging brackets located on the back of screen front are equipped with notches to allow the louver to be adjusted to accommodate facing material thickness. The safety barrier is shipped with the louver in the first notch position.

To adjust louver position:

1. Locate the (3) screws on each hanging bracket at the back of the screen front.
2. Loosen (6) screws on both hanging brackets. This will allow you to bend the bracket outward to adjust the louver to the desired position.
   NOTE: The position of the louver should match with the desired position of the notched tabs needed for your installation. The louver in the first notch position will match with the first notch position in the notched tabs, the louver in the second notch position will match the second notch in the notched tabs, etc.
3. Adjust the louver to the desired notch in order to accommodate facing material and to cover the control compartment as you see fit. Re-tighten screws on hanging brackets.
4. Install safety barrier. Center the screen front over the glass frame assembly, allowing the hanging brackets to fit inside the air openings.
5. Align the notched tabs with the slots in the fireplace. Raise slightly and push back to desired position.
6. Lower the screen front until the notched tabs are firmly in position. Verify the depth accommodates finish material, and the notched tabs position matches the louver notch position.
7. To remove safety screen: lift the screen up and out of slots.

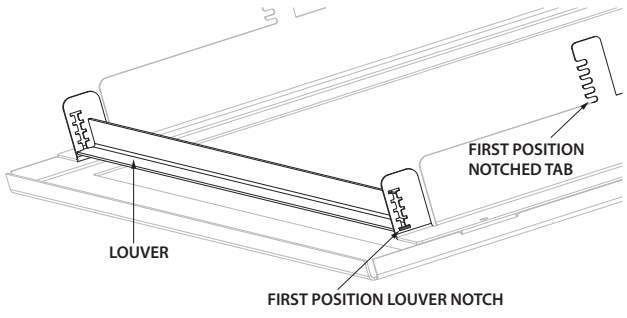

Figure 4.9, Safety Screen Louver and Notch Locations

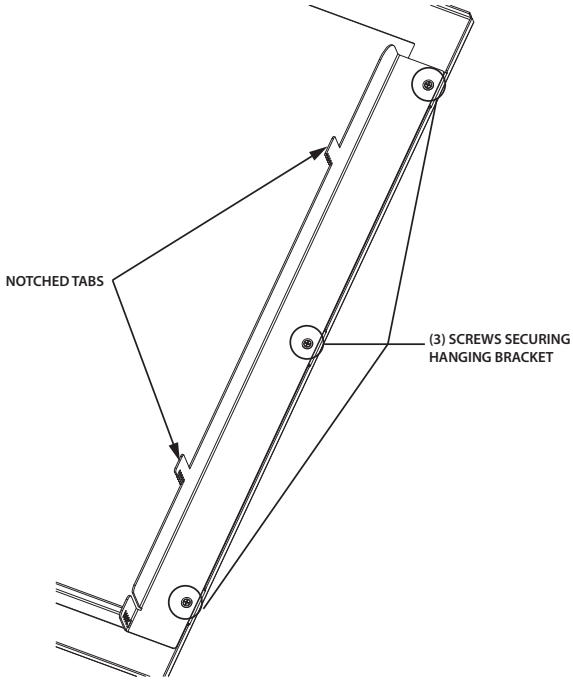

Figure 4.10, Screw Location on Hanging Bracket

Figure 4.11, Adjust Louver

5.0 GAS LINE CONNECTION

5.1 Gas Conversion (sold separately)

ATTENTION: The conversion shall be carried out in accordance with the requirements of the provincial authorities having jurisdiction and in accordance with the requirements of the ANSI Z223.1 installation code.

This fireplace is manufactured for use with natural gas. Follow the instructions included with the conversion kit if converting to Propane.

5.2 Gas Line Installation

CAUTION: Installation of the gas line must only be done by a qualified person in accordance with local building codes, if any. If not, follow ANSI 223.1. Commonwealth of Massachusetts installations must be done by a licensed plumber or gas fitter.

NOTE: The appliance and its individual shutoff valve must be disconnected from the gas supply piping system during any pressure testing of that system at pressures in excess of ½ psi (3.5 kPa). For test pressures equal to or less than ½ psi (3.5 kPa), the appliance must be isolated from the gas supply piping system by closing its individual manual shut-off valve.

- A listed (and Commonwealth of Massachusetts approved) ½" (13mm) tee handle manual shut-off valve and flexible gas connector are to be connected to the ½" (13mm) control valve inlet. If substituting for these components, please consult local codes for compliance.
- This fireplace is equipped with a 3/8" (10mm) x 18" (457mm) long flexible gas connector and manual shut-off valve.
- Run gas line into fireplace, preferably through left or right gas line holes provided. The gas line should be run to the point of connection where the shut-off valve and flexible gas line will connect. See Figure 2.1, Appliance Dimensions on page 9 for gas line access.
- Do not run gas line in a manner that would obstruct fan operation.
- For high altitude installations, consult the local gas distributor or the authority having jurisdiction for proper rating methods.

Table 5.1, Inlet Gas Supply Pressures

Fuel	Minimum Pressure	Maximum Pressure
Natural Gas	5" WC (1.25 kPa) *7" WC 1.74 kPa recommended*	10.5" WC (2.62 kPa)
Propane	12" WC (2.99 kPa) *recommended*	13" WC (3.24 kPa)

CAUTION: Before fireplace start-up, check all connections for leaks with soapy water, whether field or factory made.

6.0 TERMINATION LOCATIONS

6.1 Vertical Vent Cap Termination

WARNING: This gas appliance must not be connected to a chimney serving any other appliance.

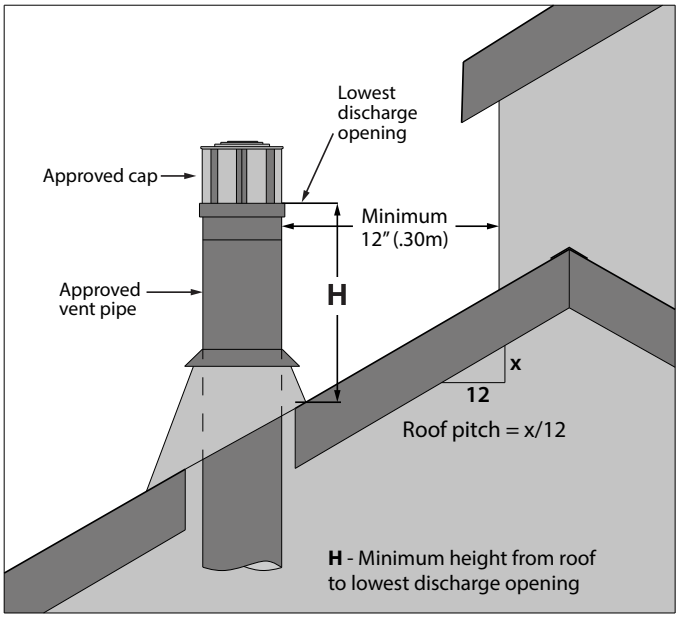

Figure 6.1, Vertical Vent Cap Clearance

	Minimum height (H) from roof	
Roof Pitch	**Feet**	**Meters**
Flat to 6/12	1.0	0.30
Over 6/12 to 7/12	1.25	0.38
Over 7/12 to 8/12	1.5	0.46
Over 8/12 to 9/12	2.0	0.61
Over 9/12 to 10/12	2.5	0.76
Over 10/12 to 11/12	3.25	0.99
Over 11/12 to 12/12	4.0	1.22
Over 12/12 to 14/12	5.0	1.52
Over 14/12 to 16/12	6.0	1.83
Over 16/12 to 18/12	7.0	2.13
Over 18/12 to 20/12	7.5	2.27
Over 20/12 to 21/12	8.0	2.44

6.2 Minimum Termination Clearances

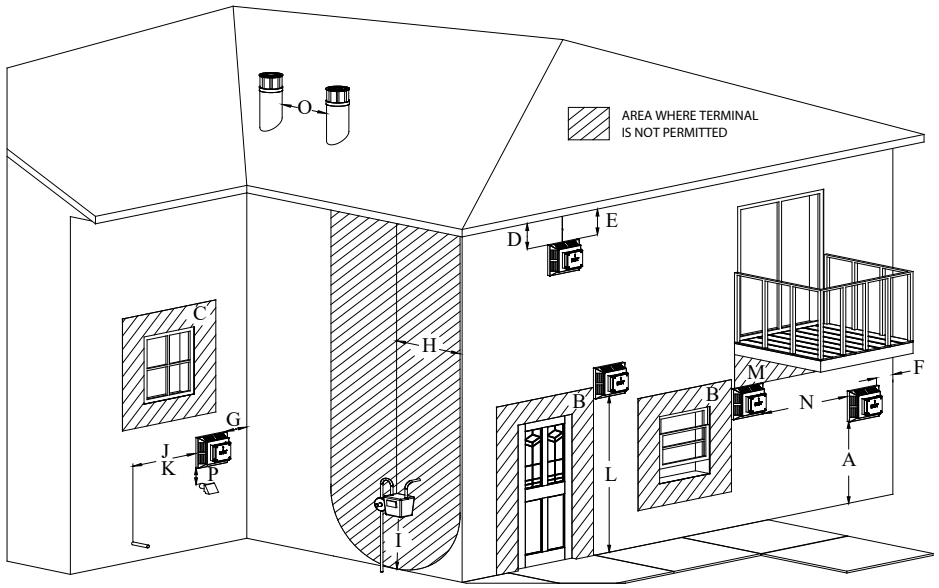

Figure 6.2, Vent Cap Locations

		Canadian installations	US installations
A	Clearance above grade, veranda, porch, deck, or balcony	12"(30cm)	12"(30cm)
B	Clearance to window or door that may be opened	12"(30cm)	9"(23cm)
C	Clearance to permanently closed window (recommended to prevent condensation on window)	12"(30cm)*	12"(30cm)*
D	Vertical clearance to ventilated soffit located above the terminal within a horizontal distance of 2 feet (61cm) from the edge of the terminal	24"(61cm)*	24"(61cm)*
E	Clearance to unventilated soffit	12"(30cm)*	12"(30cm)*
F	Clearance to outside corner	0"(0cm)*	0"(0cm)*
G	Clearance to inside corner**	12"(30cm)*	12"(30cm)
H	Clearance to each side of center line extended above meter/regulator assembly	3' (91cm) within a height 15' (4.5m) above the meter/ regulator assembly	*
I	Clearance to service regulator vent outlet	3' (91cm)	*
J	Clearance to non mechanical air supply inlet to building or the combustion air inlet to any other appliance	12"(30cm)	9"(23cm)
K	Clearance to mechanical air supply inlet	6' (1.83m)	3' (91cm) above if within 10' (3m) horizontally Massachusetts: 10' (3m)
L	Clearance above paved sidewalk or paved driveway located on public property	7' (2.13m)†	*
M	Clearance under veranda, porch deck, or balcony	12"(30cm)‡	12"(30cm)
N	Clearance between two horizontal terminations	12"(30cm)	12"(30cm)
O	Clearance between two vertical terminations (may be same height)	12"(30cm)	12"(30cm)
P	Above furnace exhaust or inlet	12"(30cm)	12"(30cm)

* Clearance in accordance with local installation codes and the requirements of the gas supplier.

** Listed snorkel termination caps require 24" (61cm) clearance to an inside corner.

† A vent shall not terminate directly above a sidewalk or paved driveway that is located between two single family dwellings and serves both dwellings.

‡ Permitted only if veranda, porch, deck, or balcony is fully open on a minimum of two sides beneath the floor.

VINYL SOFFIT, VINYL CEILING, AND VINYL OVERHANG DISCLAIMER: Clearances to heat resistant material (i.e. wood, metal). This does not include vinyl. Hussong Manufacturing Co., Inc. will not be held responsible for heat damage caused from terminating under vinyl overhangs, vinyl ceilings, or vinyl ventilated/ unventilated soffits.

7.0 VENTING

7.1 Rear Vent Conversion Instructions - Natural Gas Only

IMPORTANT: This appliance has outlets for both top and rear venting. The unused vent exit must have the cover plates in place, and the cover plates must be removed from the exit according to the instructions below to be used.

NOTE: All components removed from the top vent exit will be reinstalled for the rear vent.

7.1.1 Remove Top Vent Collars

1. REMOVE 7 SCREWS SECURING COVER PLATE

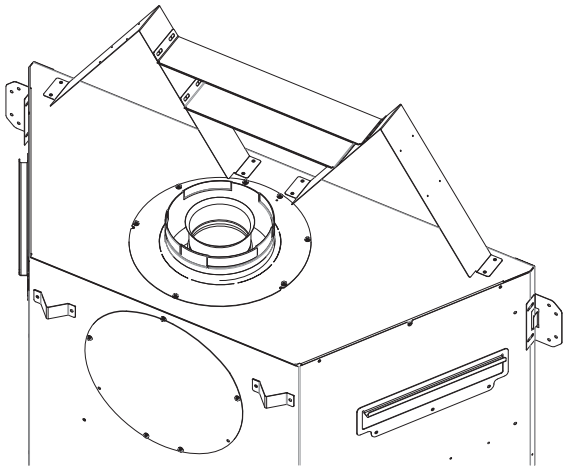

2. REMOVE (4) SCREWS SECURING 6-5/8" COMBUSTION AIR INTAKE COLLAR

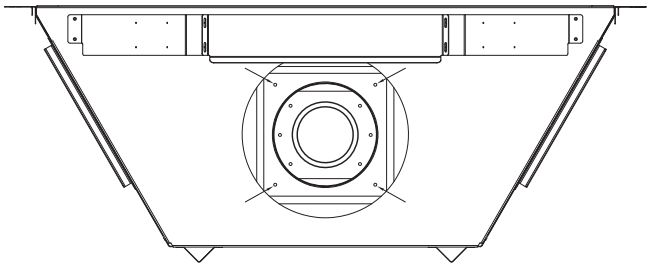

3. REMOVE (6) SCREWS SECURING 4" EXHAUST COLLAR

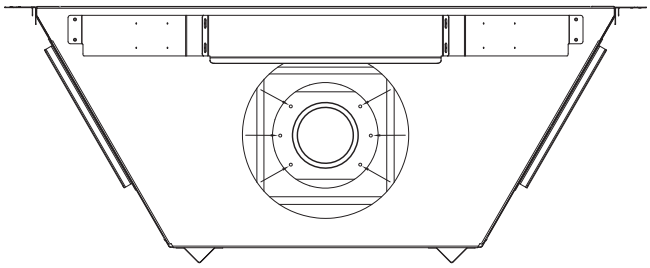

7.1.2 Remove Back Vent Combustion Air Intake and Exhaust Collars

1. REMOVE (5) ATTACHMENT SCREWS SECURING BACK COVER PLATE

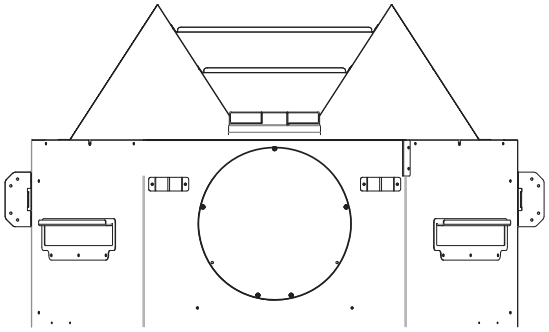

2. REMOVE (4) SCREWS SECURING COMBUSTION AIR INTAKE COVER PLATE

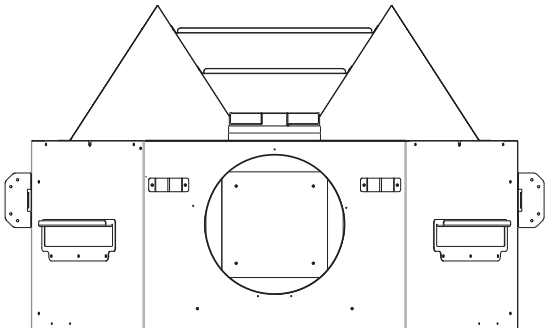

3. REMOVE (6) SCREWS SECURING EXHAUST COVER PLATE

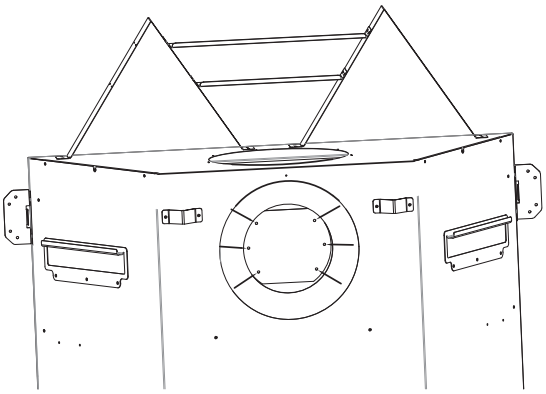

7.1.3 Install Exhaust and Combustion Air Intake Collars to Fireplace Rear

1. INSTALL 4" EXHUAST COLLAR TO REAR. VERIFY GASKET IS IN PLACE UNDERNEATH. SECURE WITH (6) SCREWS PREVIOUSLY REMOVED.

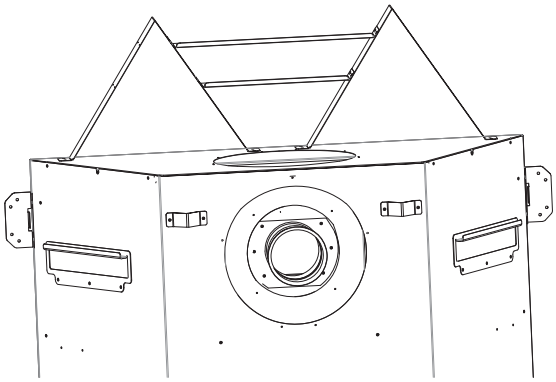

2. INSTALL 6-5/8" COMBUSTION AIR INTAKE COLLAR TO REAR. VERIFY GASKET IS IN PLACE. SECURE WITH (4) SCREWS PREVIOUSLY REMOVED.

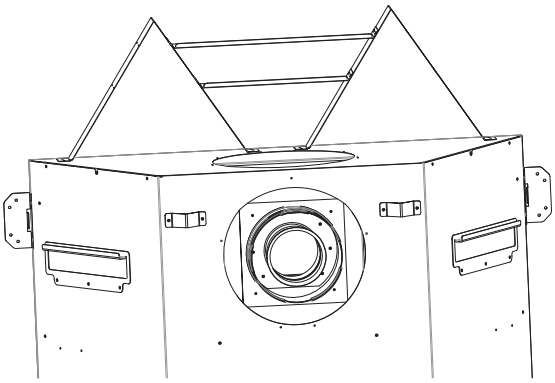

3. SECURE COVER PLATE WITH (5) SCREWS PREVIOUSLY REMOVED.

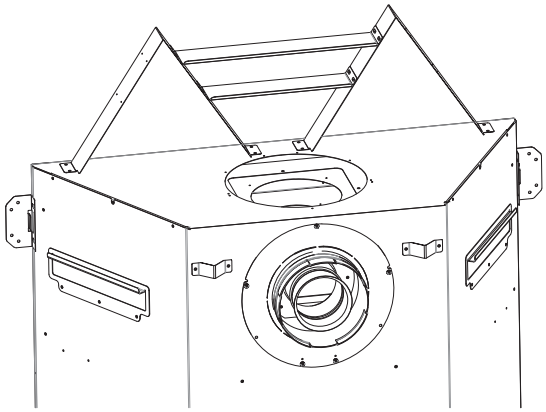

7.1.4 Install Cover Plates to Fireplace Top

WARNING: The cover plates must be installed on the top of the fireplace. DO NOT proceed with the fireplace installation until the vent conversion is completed.

1. INSTALL EXHAUST COVER PLATE TO FIREPLACE TOP. VERIFY GASKET IS IN PLACE. SECURE WITH (6) SCREWS PREVIOUSLY REMOVED.

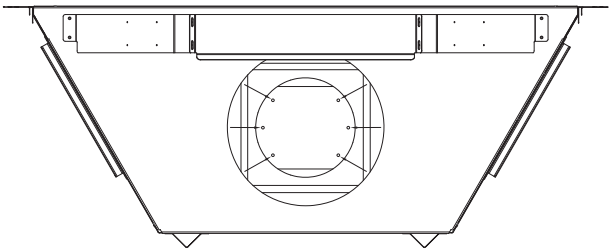

2. INSTALL COMBUSTION AIR INTAKE COVER PLATE TO AIR CHUTE. VERIFY GASKET IS IN PLACE. SECURE WITH (4) SCREWS PREVIOUSLY REMOVED.

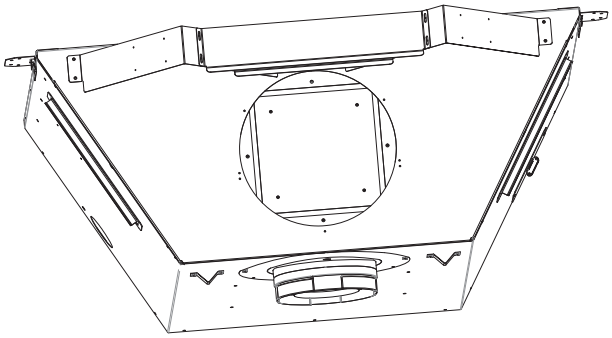

3. SECURE COVER PLATE WITH (7) SCREWS PREVIOUSLY REMOVED.

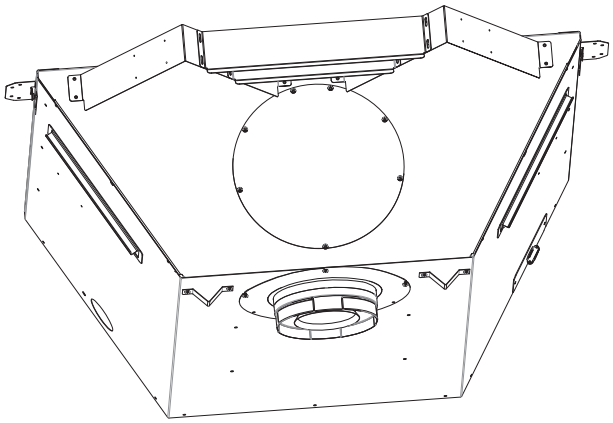

7.2 Approved Vent Systems

This appliance is equipped for use with a 4" exhaust by 6-5/8" air intake co-axial vent pipe system. This appliance is approved for use with Kozy Heat 4" x 7" #700 Series Flexible Direct Vent system (horizontal terminations only). Refer to Section 7.9 #700-2 Series Direct Vent Termination Kit(s) on page 41 for venting components and installation instructions.

This appliance is approved for use with manufacturers (horizontal and vertical terminations): American Metal Products (Ameri-Vent), BDM, ICC, Metal Fab*, Olympia Chimney Supply, Inc., Selkirk, and Simpson DuraVent.

***WHEN INSTALLING METAL FAB VENT SYSTEM** with this appliance an adapter must be used. Use adapter part number 4DDA.

The following termination caps are not allowed: BDM Snorkel 94040614, and Simpson Duravent 46DVASNK14, 46DVA-H2, 46DVA-H2-SNK14, 46DVA-H2-SNK36.

This appliance can be adapted to use 4" diameter aluminum flexible pipe when used in combination with an existing minimum 7" ID Class A metal chimney. See Section 7.7.1 Chimney Conversion Kit on page 30.

This appliance can be adapted to use 3" x 3" flexible co-linear vent pipes when used in combination with an existing minimum 6" x 8" ID masonry or 7" ID Class A metal chimney. See Section 7.8 Coaxial to Co-Linear Chimney Conversion on page 40.

The 4" x 6-5/8" vent configurations listed in this manual are shown with rigid pipe. Flexible pipe may be used for approved venting configurations by approved vent manufacturers. Refer to the vent manufacturer's installation instructions.

Refer to the vent manufacturer's installation manual for complete installation instructions. Vent installation must conform with venting requirements and restrictions as outlined in this manual.

7.3 Venting Requirements

Consult the local and national installation codes to assure adequate combustion and ventilation air is available. Venting requirements apply to both natural gas and Propane.

NOTE: Wall thimble products that comply with the required clearance to combustibles must be installed for all horizontal vent runs that pass through interior or exterior walls. These wall thimble products may be insulated using unfaced insulation products listed as noncombustible per ASTM E 136.

NOTE: Attic insulation shields may be insulated using unfaced insulation products listed as noncombustible per ASTM E 136.

- Flame height and appearance will vary depending upon venting configuration and the type of fuel used.
- The vertical vent heat shield is required when venting off of the top of the appliance. The horizontal vent heat shield must be installed when incorporating minimum horizontal venting. See Section 7.5 Vent Heat Shield Assembly Installation on page 33.Provide a means for visually checking the vent connection to the appliance after the fireplace is installed.
- A minimum of 1"(25mm) clearance on all side of the vertical pipe must be maintained.
- A minimum of 1"(25mm) clearance on the top, sides, and bottom of the horizontal vent pipes must be maintained.

7.4 Restrictor Assembly and Installation

Burner flame appearance and characteristics are affected by altitude, fuel quality, venting configuration, and other factors. To achieve desirable flame appearance, the vent exhaust may be restricted by the restrictor plate (included in components packet).

The restrictor plate is shipped with all inner rings intact, and when installed, provides the most vent restriction. There are (2) inner rings that can be knocked out. The innermost ring knocked out will create less restriction, and the outer most ring knocked out will create the least amount of restriction.

Follow Figure 7.1 for restrictor plate installation before attaching venting. Section 11.2.2 Vent Restriction (after installation) on page 55 outlines restrictor recommendations depending on burner flame appearance, and instructions on installation after venting is completed.

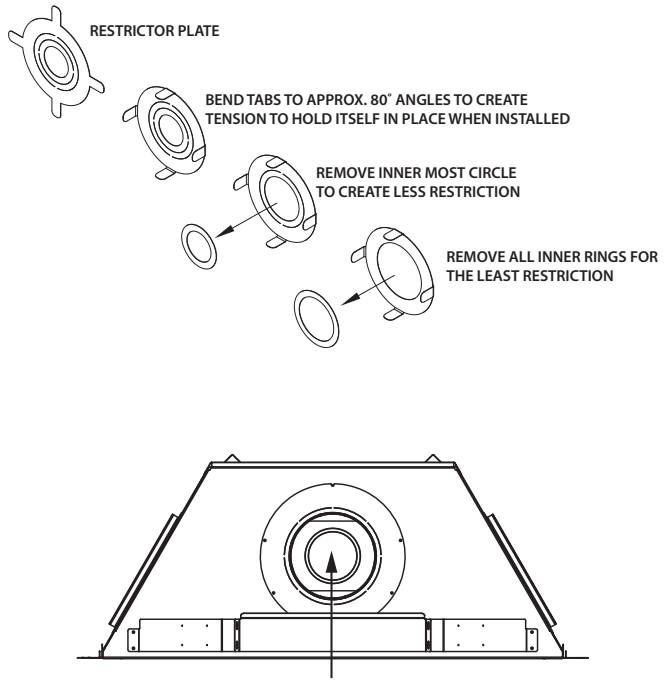

SLIDE RESTRICTOR INTO EXHAUST PIPE ON TOP OF FIREPLACE WITH TABS POINTING TOWARDS YOU PRIOR TO ATTACHING VENTING

Figure 7.1, Restrictor Assembly and Installation

7.5 Vent Heat Shield Assembly Installation

IMPORTANT: The vertical vent heat shield MUST be installed for every type of top venting application. The horizontal vent heat shield must be installed when incorporating minimum horizontal venting.

NOTE: There are (6) screw holes located in front of the flue outlet to offset the vent heat shield assembly in front of the vent pipe. Align the heat shield as necessary for your venting installation.

7.5.1 Vertical Vent Heat Shield Installation

1. Position the vertical vent heat shield in front of the vent pipe, with the flanges facing towards the fireplace face as necessary for the type of installation.
2. Align the (2) slots on the vertical heat shield flanges with corresponding screw holes located in front of the flue outlet on the top of the fireplace.
3. Secure the vertical vent heat shield to the fireplace with (2) attachment screws (provided in the components package).

7.5.2 Minimum Horizontal Venting

1. Bend perforation on the (3) hand-tabs down on the horizontal vent heat shield.
2. Locate (3) screw holes on the vertical vent heat shield.
3. Align the (3) slots on horizontal vent heat shield tabs to the (3) screws holes on the vertical vent heat shield.
4. Attach the horizontal vent heat shield with screws (provided) through the screw holes on the vertical vent heat shield. The 1"(25mm) vent stand-off tab will rest on top of the vent pipe.

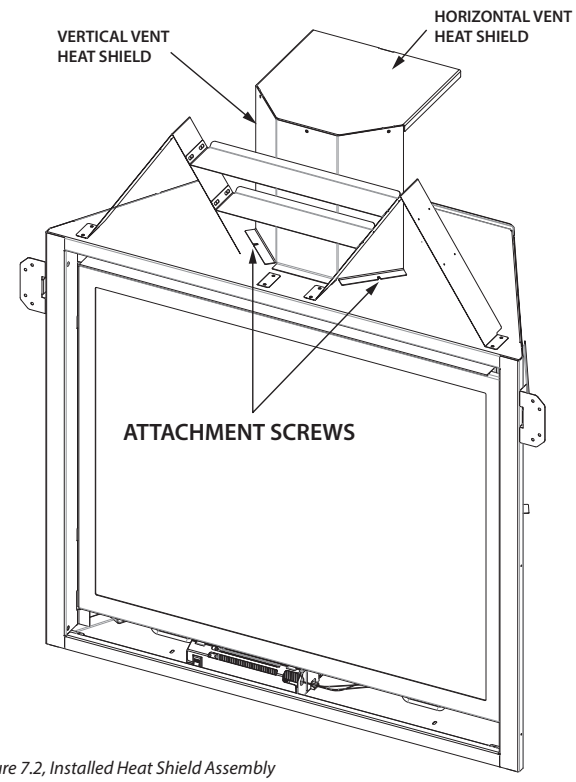

Figure 7.2, Installed Heat Shield Assembly

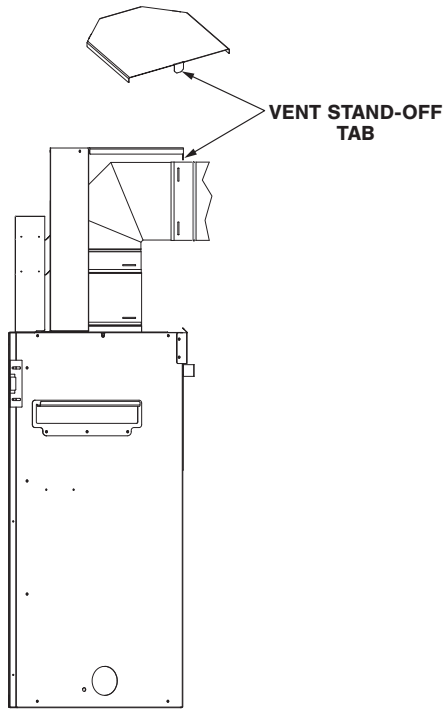

Figure 7.3, Installed Horizontal Heat Shield

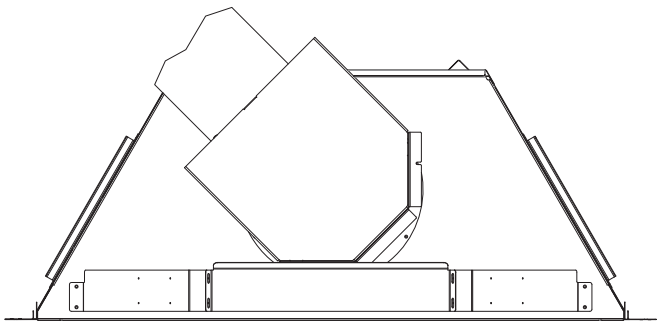

Figure 7.4, Vent Heat Shield on a Corner Installation

7.6 Coaxial Rigid Pipe Venting Configurations

7.6.1 Top Venting

IMPORTANT: The vertical vent heat shield MUST be installed for every vent installation off the top of the appliance. See Section 7.5 on page 33.

Flexible pipe may be used for approved venting configurations by vent manufacturers listed in Section 7.2 Approved Vent Systems on page 31.

7.6.1.1.1 Vertical Terminations

(i) ***Minimum/ Maximum Vertical Venting:***

3' (914mm) minimum vertical length / 50' (15.24m) maximum vertical length + termination cap

DIAG.1 TOP VENTING (VERTICAL TERMINATIONS)

(A) Stand-off Brackets
(B) Stand-off Heat Shields
(C) 90° Elbow (not applicable)
(D) Vertical Vent Heat Shield
(E) Horizontal Vent Heat Shield (not applicable)
(F) Termination Cap

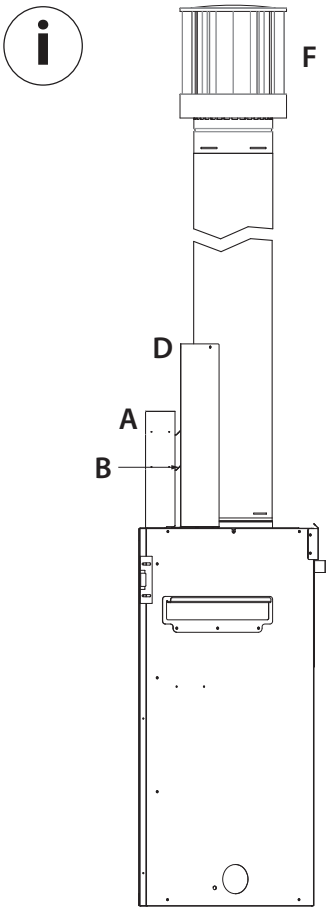

7.6.1.1 Combination Venting

IMPORTANT: Horizontal vent sections require at least ¼" (6mm) rise for every 12"(305mm) of travel.

IMPORTANT: The vent heat shield assembly must be installed when incorporating minimum horizontal venting off the top of the appliance. See Section 7.5 on page 33.

Flexible pipe may be used for approved venting configurations by vent manufacturers listed in Section 7.2 Approved Vent Systems on page 31.

(i) ***Minimum Vertical Rise, Minimum / Maximum Horizontal Terminations:***

6" (152mm) minimum vertical rise + 90° horizontal elbow + 6" (152mm) minimum horizontal run / 4' (1219mm) maximum horizontal run + termination cap

DIAG.2 TOP VENTING (COMBINATION VENTING)

(A) Stand-off Brackets
(B) Stand-off Heat Shields
(C) 90° Elbow
(D) Vertical Vent Heat Shield
(E) Horizontal Vent Heat Shield
(F) Termination Cap

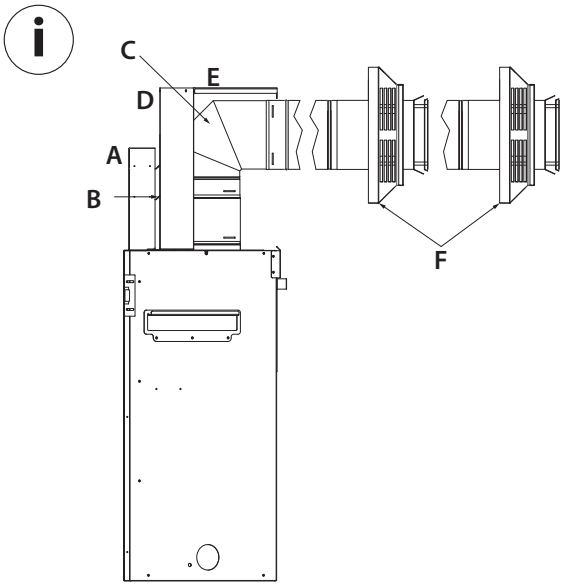

7.6.2 Natural Gas and Propane Maximum Vertical & Maximum Horizontal Top Vent Combination Venting

For top vent maximum vertical and maximum horizontal combination venting, the vent terminations must be within the shaded area in Figure 7.5.

Flexible pipe may be used for approved venting configurations by vent manufacturers listed in Section 7.2 Approved Vent Systems on page 31.

- 25' (7.6m) maximum vertical rise + 25' (7.6m) maximum horizontal run = 50' (15.2m) of total length
- Maximum of (5) 90° elbows.
- For each additional 90° elbow used after the first elbow, 3' (914mm) must be subtracted from maximum venting allowed.
- For each 45° elbow used, 18" (457mm) must be subtracted from maximum venting allowed.
- (2) 45° degree elbows may be used in place of (1) 90° elbow.

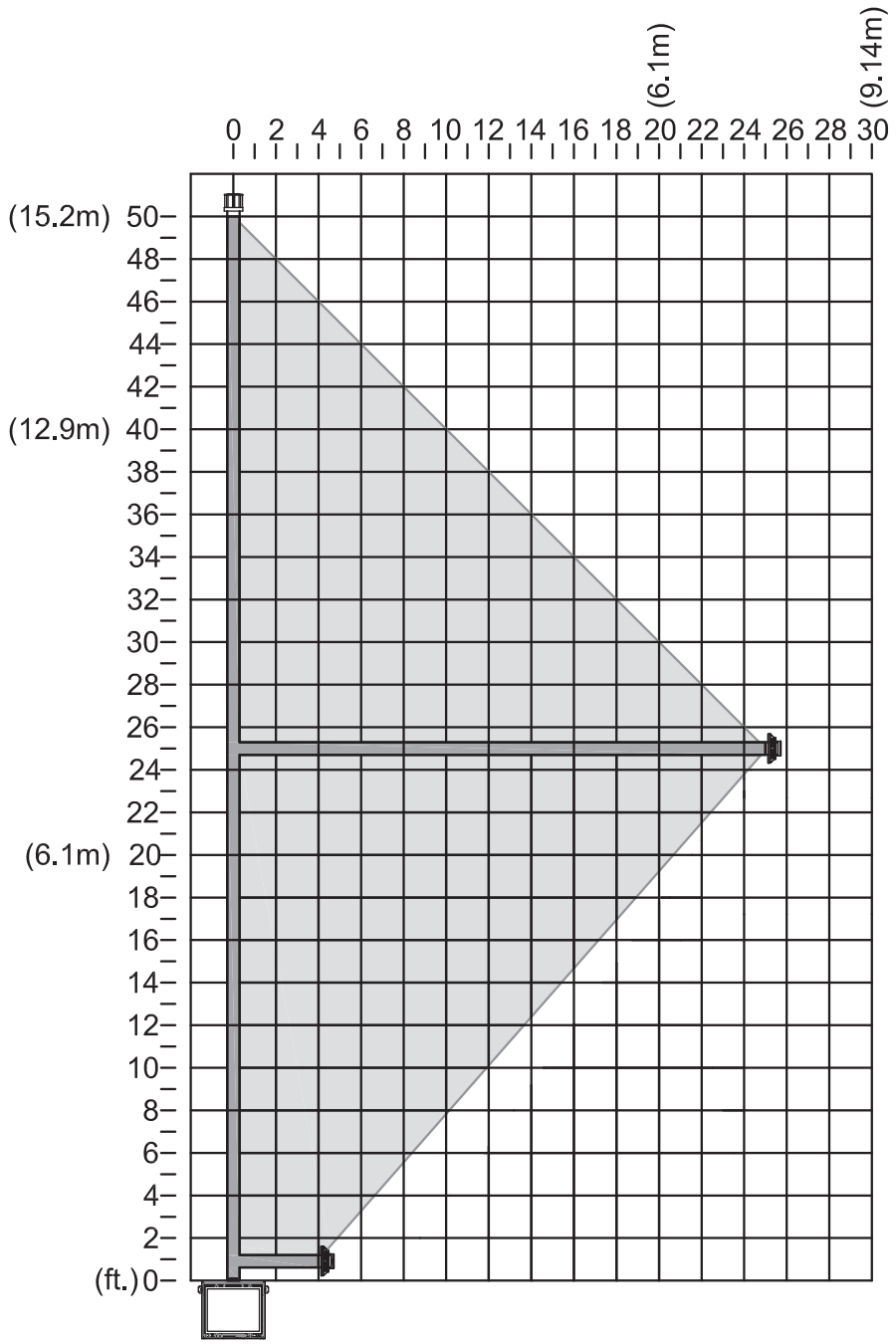

Figure 7.5, Natural Gas & Propane - Top Vent Combination Venting (V/H)

7.6.3 Rear Venting (NATURAL GAS ONLY)

IMPORTANT: Horizontal vent sections require at least ¼" (6mm) rise for every 12"(305mm) of travel.

Flexible pipe may be used for approved venting configurations by vent manufacturers listed in Section 7.2 Approved Vent Systems on page 31.

7.6.3.1 Horizontal Terminations

(i) ***Minimum / Maximum Horizontal Terminations:***

6" (152mm) minimum horizontal run / 8' (2.4m) maximum horizontal run + termination cap

7.6.3.2 Combination Venting

(ii) ***Minimum / Maximum Vertical Terminations:***

90° vertical elbow + 3' (914mm) minimum vertical length / 50' (15.2m) maximum vertical length + termination cap

DIAG.3 REAR VENTING (COMBINATION VENTING)

(A) Stand-off Brackets
(B) Stand-off Heat Shields
(C) 90° Elbow
(D) Vertical Vent Heat Shield (not applicable)
(E) Horizontal Vent Heat Shield (not applicable)
(F) Termination Cap

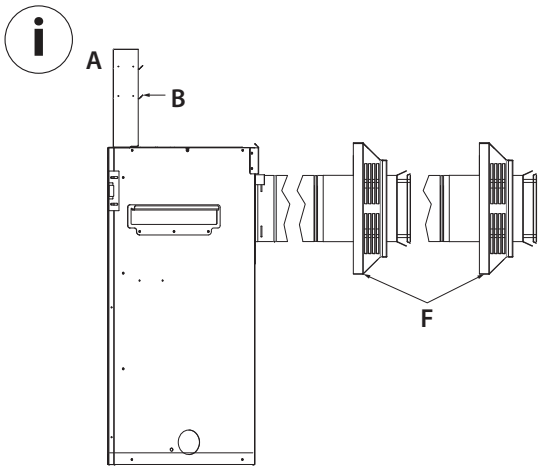

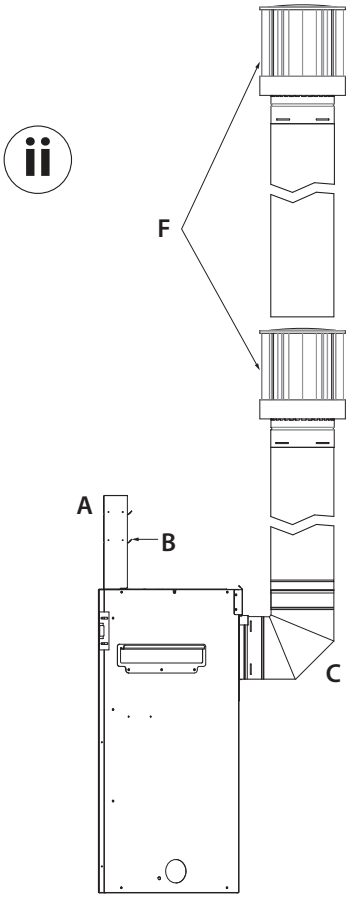

7.6.4 Natural Gas ONLY Maximum Vertical & Maximum Horizontal Rear Vent Combination Venting

For top vent maximum vertical and maximum horizontal combination venting, the vent terminations must be within the shaded area in Figure 7.6.

Flexible pipe may be used for approved venting configurations by vent manufacturers listed in Section 7.2 Approved Vent Systems on page 31.

- 25' (7.6m) maximum vertical rise + 25' (7.6m) maximum horizontal run = 50' (15.2m) of total length
- Maximum of (5) 90° elbows.
- For each additional 90° elbow used after the first elbow, 3' (914mm) must be subtracted from maximum venting allowed.
- For each 45° elbow used, 18" (457mm) must be subtracted from maximum venting allowed.
- (2) 45° degree elbows may be used in place of (1) 90° elbow.

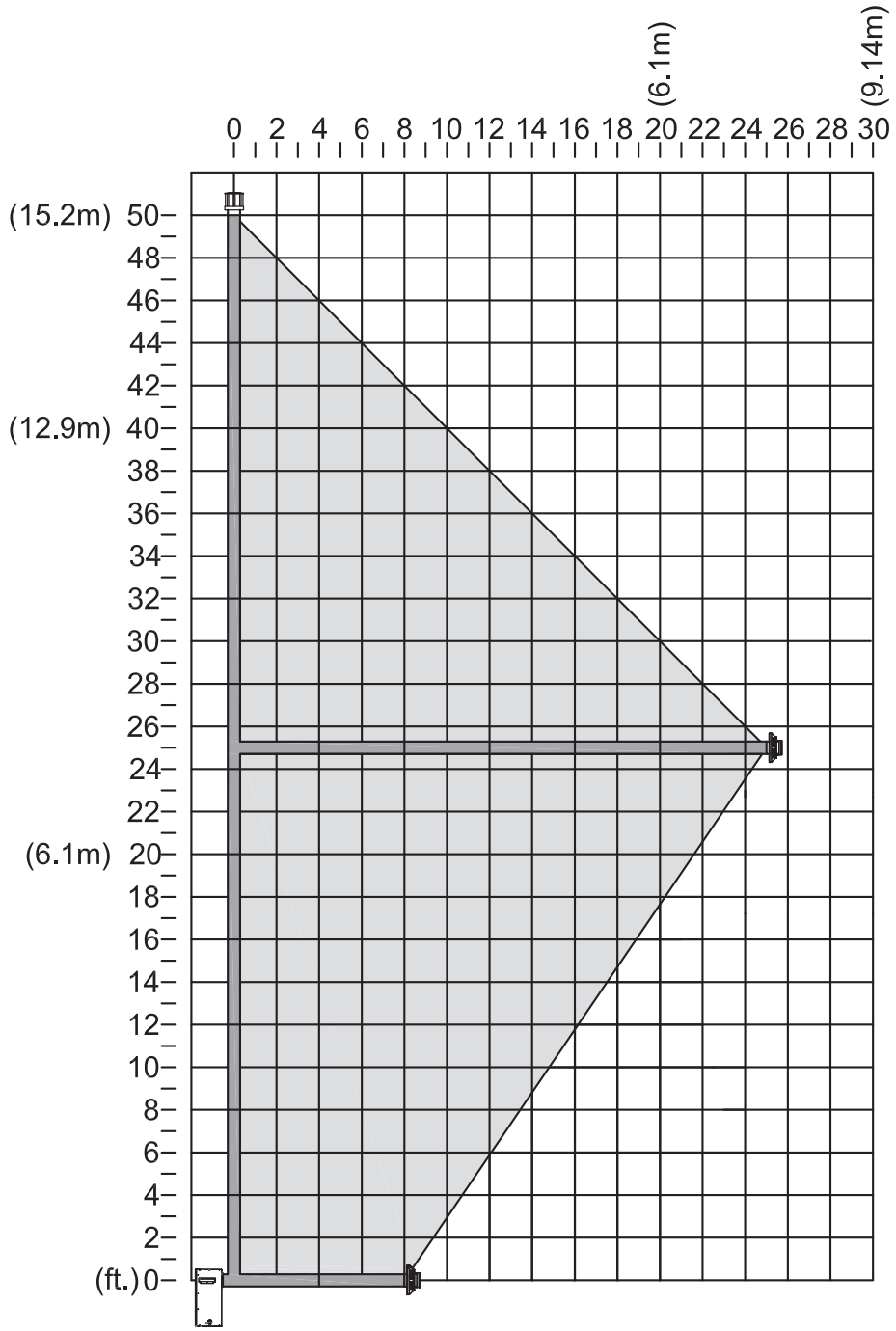

Figure 7.6, Natural Gas ONLY - Rear Vent Combination Venting (H/V)

7.7 Class A Chimney/Masonry Chimney Conversion

This appliance is approved to be adapted to convert for use with factory-built Class A metal chimneys and masonry chimneys.

Before conversion, have the existing installation inspected by a qualified chimney sweep or professional installer. The existing chimney system must be in serviceable condition, and functionally sound. Before proceeding with following installations, check with local building jurisdiction to verify this type of installation is allowed in your area.

Follow DIAG. 4 for allowable venting configurations for installation in existing through-the-ceiling, Class A/Masonry chimney. Route the exhaust gases and intake air through the existing Class A/Masonry chimney.

7.7.1 4" Flex Pipe Venting Configurations

IMPORTANT: Horizontal vent sections require at least 1/4" (6mm) rise for every 12" (305mm) of travel.

IMPORTANT: The vent heat shield assembly must be installed when incorporating minimum horizontal venting off the top of the appliance.

IMPORTANT: Care should be taken when installing flexible pipe to avoid a tight bend that may cause abrasion or damage to the flexible pipe.

The vent option listed below allows for a minimum of 0" (0mm) to a maximum of 24" (610mm) horizontal run using flexible pipe.

(i) ***Minimum / Maximum Rear Vent Vertical Terminations (NATURAL GAS ONLY):***

Retro Connector + 10' (3.05m) minimum length of 4" aluminum flexible pipe / 50' (15.24m) maximum length of 4" aluminum flexible pipe + top adapter + termination cap

DIAG.4 4" FLEX PIPE CHIMNEY CONVERSION

(A) Stand-off Brackets
(B) Stand-off Heat Shields
(C) Retro Connector
(D) Top Adapter
(E) Termination Cap

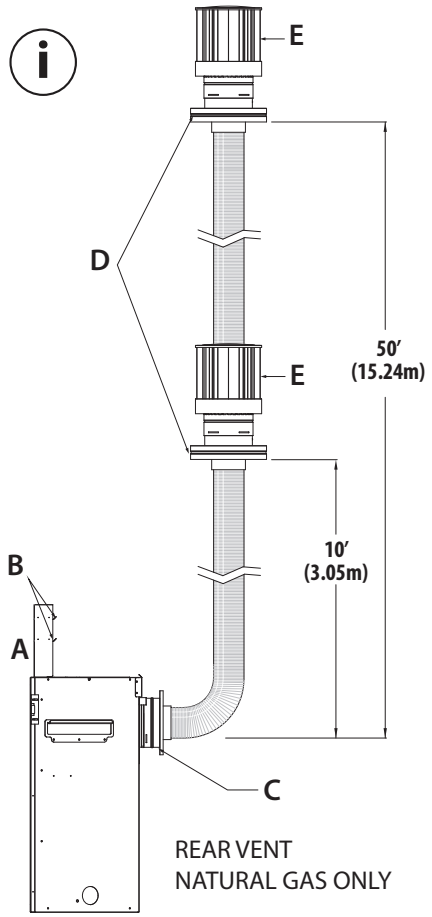

7.8 Coaxial to Co-Linear Chimney Conversion

Before conversion, have the existing installation inspected by a qualified chimney sweep or professional installer. The existing chimney system must be in serviceable condition, and functionally sound. Before proceeding with following installations, check with local building jurisdiction to verify this type of installation is allowed in your area.

Follow DIAG. 5 for allowable venting configurations for installation in existing masonry chimney. Route the exhaust gases and intake air through the existing masonry chimney.

7.8.1 Coaxial to Co-Linear Venting Configurations

IMPORTANT: Horizontal vent sections require at least 1/4" (6mm) rise for every 12" (305mm) of travel.

IMPORTANT: The vent heat shield assembly must be installed when incorporating minimum horizontal venting off the top of the appliance.

IMPORTANT: Care should be taken when installing flexible pipe to avoid a tight bend that may cause abrasion or damage to the flexible pipe.

Vent options listed below (i, ii, iii) allow for a minimum of 0" (0mm) to a maximum of 24" (610mm) horizontal run using rigid or flexible pipe.

(i) ***Minimum / Maximum Top Vent Vertical Terminations:***

Coaxial to Co-linear Adapter + 10' (3.05m) minimum length of 3" x 3" aluminum flexible pipe / 50' (15.24m) maximum length of 3" x 3" aluminum flexible pipe + termination cap

(ii) ***Minimum / Maximum Rear Vent Vertical Terminations (NATURAL GAS ONLY):***

Coaxial to Co-linear Adapter + 10' (3.05m) minimum length of 3" x 3" aluminum flexible pipe / 50' (15.24m) maximum length of 3" x 3" aluminum flexible pipe + termination cap

(iii) ***Minimum / Maximum Top Vent with Rigid Pipe Vertical Terminations:***

90° horizontal 4" x 6-5/8" elbow + maximum of 24" (610mm) of coaxial 4" x 6-5/8" rigid pipe + coaxial to co-linear adapter + 10' (3.05m) minimum length of 3" x 3" aluminum flexible pipe / 50' (15.24m) maximum length of 3" x 3" aluminum flexible pipe + termination cap

DIAG.5 COAXIAL TO CO-LINEAR

(A) Stand-off Brackets
(B) Stand-off Heat Shields
(C) 90° Elbow
(D) Vent Heat Shield Assembly
(E) Coaxial to Co-linear Adapter
(F) Termination Cap

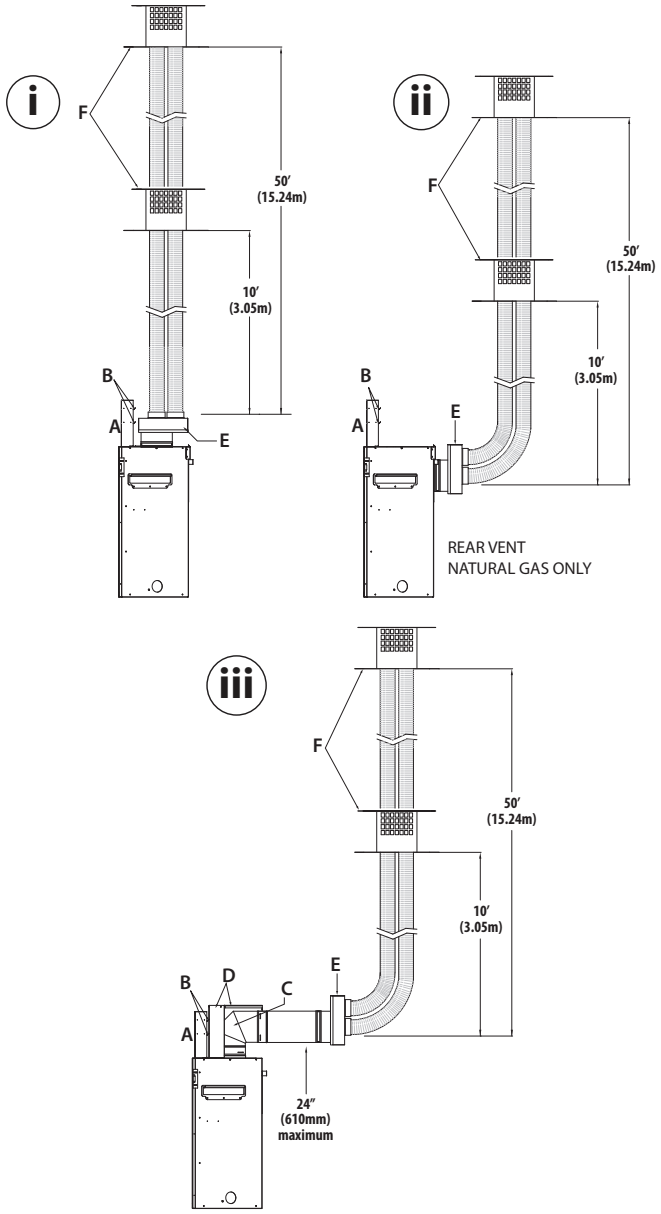

7.9 #700-2 Series Direct Vent Termination Kit(s)

WARNING: #700-2 Series is for top vent applications ONLY. Do not install off the rear of the appliance.

VIMPORTANT: The flex pipe is permanently attached to the exterior plate. DO NOT ATTACH either #745-2 or #718-2 termination kit to fireplace (or extension kit) until it has passed through the wall. Install termination plates to the outside wall exterior.

- If terminating against vinyl siding, a vinyl siding protector must be used (included with the #745-2 and #718-2 direct vent kits). Follow instructions included.
- Each #746-2 extension kit contains enough 4″ & 7″ flexible aluminum pipe to extend chimney an additional 6′ (1.83m).

7.9.1 #700-WPT Installation Instructions

IMPORTANT: The heat shield within the wall thimble must overlap a minimum of 1-1/2″ (38mm). An extension will be needed if going through a thicker wall than 6-1/2″ (165mm). Refer to BDM vent manufacturer if wall extension is necessary.

1. Hand bend the (2) tabs on the top of the wall pass through at the 1″ (25mm) top required clearance. Hand bend the (6) tabs on the sides and bottom of the wall pass through. Repeat for the other section.
2. From the interior, install one section of the wall pass through. Secure with (4) screws (not provided).
3. From the exterior, install the other section of the wall pass through, overlapping the heat shields as necessary to accommodate wall thickness. The sections must overlap a minimum of 1-1/2″ (38mm). Secure to exterior wall with (4) screws (not provided).
4. Follow vent manufacturer installation instructions for vent installation.

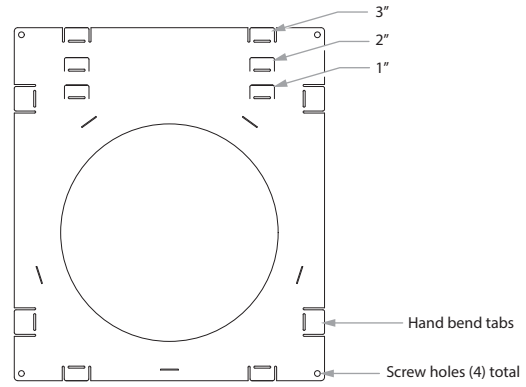

Figure 7.7, #700-WPT

7.9.2 Assembly and Installation

- The minimum bend radius to center is 6″ (152mm) required for installation of the flexible vent pipe.
- Care should be taken when installing to avoid a tight bend that may cause abrasion or damage to the flexible pipe.

5. Attach vinyl siding protector (G) (not shown).
6. Mount the required wall thimble (H) with 1″ (25mm) top clearance and 1″ (25mm) side clearance to the exterior wall, and seal.
   (OPTIONAL) insulate the wall thimble with any unfaced insulation products listed as non-combustible per ASTM E 136.
7. Apply a liberal bead of exterior sealant around outer edge of termination box (A). Place assembly through the wall-pass through in exterior wall, and secure with (4) screws through the four holes (B).
8. Form the 4″ & 7″ flexible aluminum pipes on termination kit (#745-2 or #718-2), and if applicable, on each extension kit.
9. Gently pull 4″ & 7″ pipes down to the top of the fireplace, or if applicable, the extension kit.
   IMPORTANT: DO NOT stretch extension kit beyond 6′. (1.83m); DO NOT stretch beyond what is required. It is very difficult to decompress flex pipes once stretched.
10. Place a bead of sealant outside 4″ flex pipe collar (C) (end with EXTERNAL LIP) and sliding the collar into 4″ pipe on extension kit or top of fireplace (D). Secure with 3 evenly spaced screws.
11. Place a bead of sealant inside 7″ flex pipe collar (E) (end with the INTERNAL lip), sliding the collar over 7″ pipe on top of fireplace (F). Secure with 3 evenly spaced screws.
12. If additional extension kits are required, repeat Steps 4 and 5, placing 4″ & 7″ pipes onto previous extension kit.

DIAG.6 #700-2 Assembly and Installation

(A) Termination box
(B) Holes in exterior wall plate (only 3 shown)
(C) 4″ flex pipe collar (not shown)
(D) 4″ pipe on fireplace or extension kit (not shown)
(E) 7″ flex pipe collar
(F) 7″ pipe on fireplace or extension kit
(G) Vinyl siding protector (not shown)
(H) Wall Thimble with 1″ (25mm) top clearance

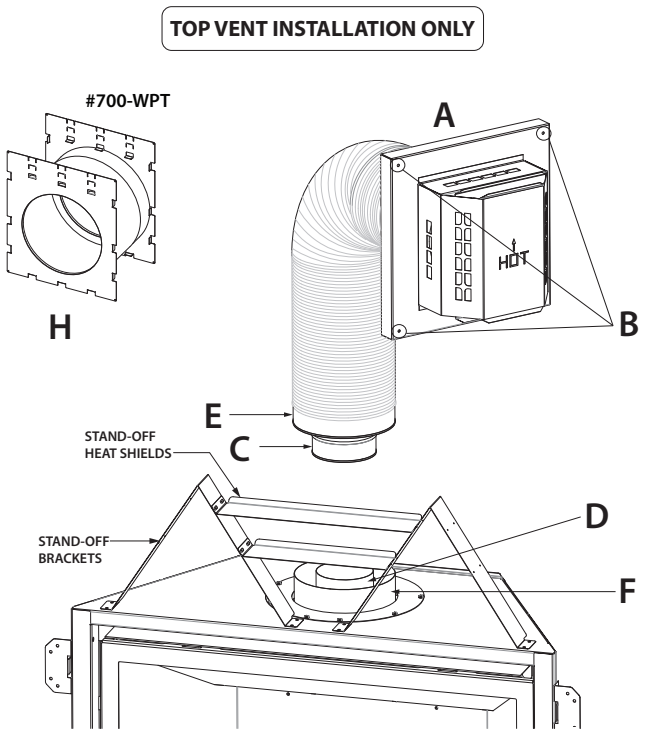

Figure 7.8, Installation and Assembly of #700-2 Series

8.0 FIREPLACE SETUP

8.1 Glass Frame Assembly

WARNING: Do not operate this fireplace with the glass removed, cracked, or broken. Replacement of the glass assembly should be done by a licensed or qualified service person.

8.1.1 Remove Glass Frame Assembly

WARNING: Do not remove the glass assembly when hot.

1. Remove the safety barrier.
2. Locate (2) spring-loaded latches securing the glass assembly at the bottom of the firebox.
3. Pull the spring-loaded latches out and down to release the bottom of the glass assembly.
4. Lift glass assembly up and off of the (2) tabs located at the top of the firebox.

8.1.2 Install Glass Frame Assembly

1. Align the slots on top of the glass assembly over the tabs at the top of the firebox while lowering the bottom of the glass assembly into position.
2. Pull the spring-loaded latches out and up to secure the bottom of glass to the bottom of the fireplace.
3. Reinstall safety barrier.

8.2 Bottom Frame Removal and Installation

To access the control module housing, the bottom frame will need to removed. It must be reinstalled after servicing to maintain clearances .

1. Remove the safety barrier.
2. Locate the bottom frame.
3. Lift the bottom frame up and out of slots on firebox floor.
4. To reinstall, align the tabs on the bottom frame and lower into position.
5. Reinstall safety barrier.

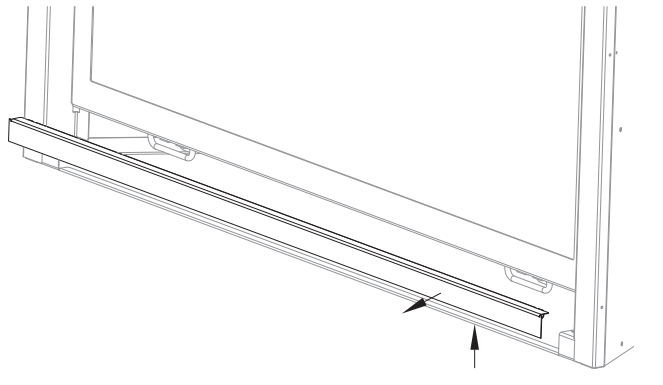

Figure 8.1, Bottom Frame Removal

8.3 Glass Media

WARNING: DO NOT BLOCK PILOT WITH GLASS MEDIA. A BLOCKED PILOT MAY CAUSE DELAYED IGNITION.

IMPORTANT: Follow instructions below for proper media installation of your specific glass media. Do not substitute materials.

The glass media dam will need to be set into correct position for you gas installation. Set into position before installing glass media.

8.3.1 Glass Media Dam

There are (2) channels located in the front of the burner cover/ media tray to install the glass media dam for natural gas or Propane installations. Proper placement of the glass media dam allows for air flow and proper flame appearance.

See below for correct installation of the glass media dam for your specific gas installation.

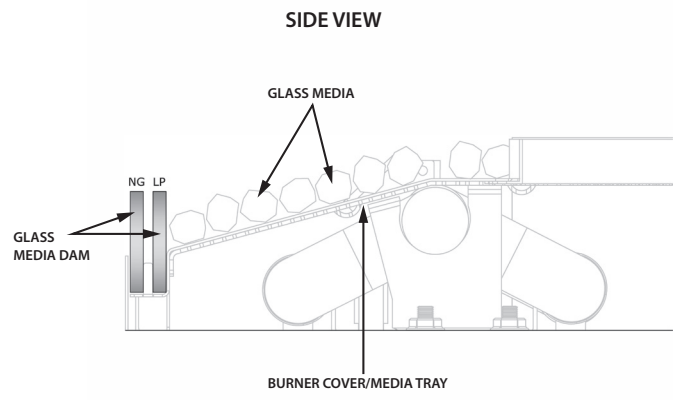

Figure 8.2, Glass Media Dam Installation

8.3.2 #101 Series Glass Media Installation

1. Remove glass media from its packaging. The glass media may be cleaned prior to installation. See section 8.3.5.
2. Install 10 lbs. (4.5 kg) of glass beads onto media tray and pilot shield.
3. Verify the glass media is one layer deep across the firebox. Do not block the pilot assembly.
4. Save any unused media for later use.

8.3.3 #201 Series Glass Media Installation

1. Remove glass media from its packaging. The glass media may be cleaned prior to installation. See section 8.3.5.
2. Install 10 lbs. (4.5 kg) of crushed glass onto media tray and pilot shield.
3. Verify the glass media is one layer deep across the firebox. Do not block the pilot assembly.
4. Save any unused media for later use.

8.3.4 #308 Series Glass Media

8.3.4.1 Natural Gas Installations

1. Remove glass media from its packaging. The glass media may be cleaned prior to installation.
2. Install 8 lbs. (3.6 kg) of crushed glass onto media tray and pilot shield.
3. Verify the glass media is one layer deep across the firebox. Do not block the pilot assembly.
4. Save any unused media for later use.

8.3.4.2 Propane Gas Installations (TOP VENT ONLY)

1. Remove glass media from its packaging. The glass media may be cleaned prior to installation. See section 8.3.5.
2. Install 7 lbs. (3.175 kg) of crushed glass onto media tray and pilot shield.
3. Remove up to 100% of glass media off of the burner and burner ports for proper flame appearance.
4. Verify the glass media is one layer deep across the firebox. Do not block the pilot assembly.
5. Save any unused media for later use.

8.3.5 Cleaning Glass Media

As a natural reaction from direct contact to heat and exposure to flame, glass media may discolor or produce a fine oil residue. Follow instructions below to clean glass media. Contact your local authorized dealer for replacement glass media.

- Remove glass media from firebox using protective gloves.
- Clean glass media with mild dish soap and water.
- Drain and rinse the glass media thoroughly. Verify the glass media is completely dry before placing on media tray.
- Follow instructions above for your specific glass media reinstallation. Do not block the pilot assembly with glass media.

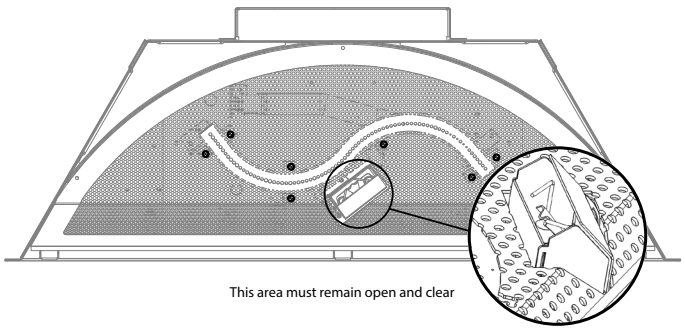

Figure 8.3, Pilot Assembly Location

8.4 Control Board Removal and Installation

WARNING: If burner and/or pilot have been burning, use appropriate protection to avoid burns or damage to personal property before removing any components. DO NOT OPERATE THIS APPLIANCE WITHOUT THE SEALING GASKET (LOCATED UNDER THE CONTROL BOARD) IN PLACE. IF GASKETING IS DAMAGED, IT MUST BE REPLACED.

CAUTION: Check all connections for leaks with soapy water, whether field or factory made.

8.4.1 Control Board Removal

1. Disconnect electrical power.
2. Locate the manual valve installed by your qualified service technician.
3. Turn the manual valve clockwise to the OFF position.
4. Remove the safety barrier and glass frame assembly.
5. Remove glass media and media dam.
6. Remove media tray from firebox (7) screws.
7. Lift burner tube up and off the burner brackets.
8. Remove halogen bulbs. Loosen (4) screws that secure light brackets to control board.
9. Pull light bracket assemblies away from control board, allowing access to screws securing control board to firebox bottom.
10. Remove and save (8) screws securing control board.
11. Lift control board out of firebox, being careful not to damage sealing gasket lying underneath.

8.4.2 Control Board Installation

1. Place the control board in firebox, aligning the holes in board with mounting studs at the bottom of the firebox.
   VERIFY SEALING GASKET IS IN PLACE.
2. Secure the control board with screws previously removed.
3. Re-attach light brackets, tighten screws. Reinstall halogen bulbs.
4. Reinstall burner tube, positioning burner venturi over burner orifice. Set the burner tube into position in burner brackets.
5. Reinstall media tray, aligning holes in cover to corresponding holes on the burner brackets. Secure with (7) screws previously removed.
6. Reinstall media dam.
7. Reinstall glass media, being careful not to block pilot.
8. Reconnect all wiring harnesses to gas valve. Plug all components into electrical outlet.
9. Reinstall glass assembly and safety barrier.
10. Turn the manual valve counterclockwise to the ON position.
11. Reconnect electrical power.
12. Verify proper glass media placement, operation of fireplace, and any electrical components.

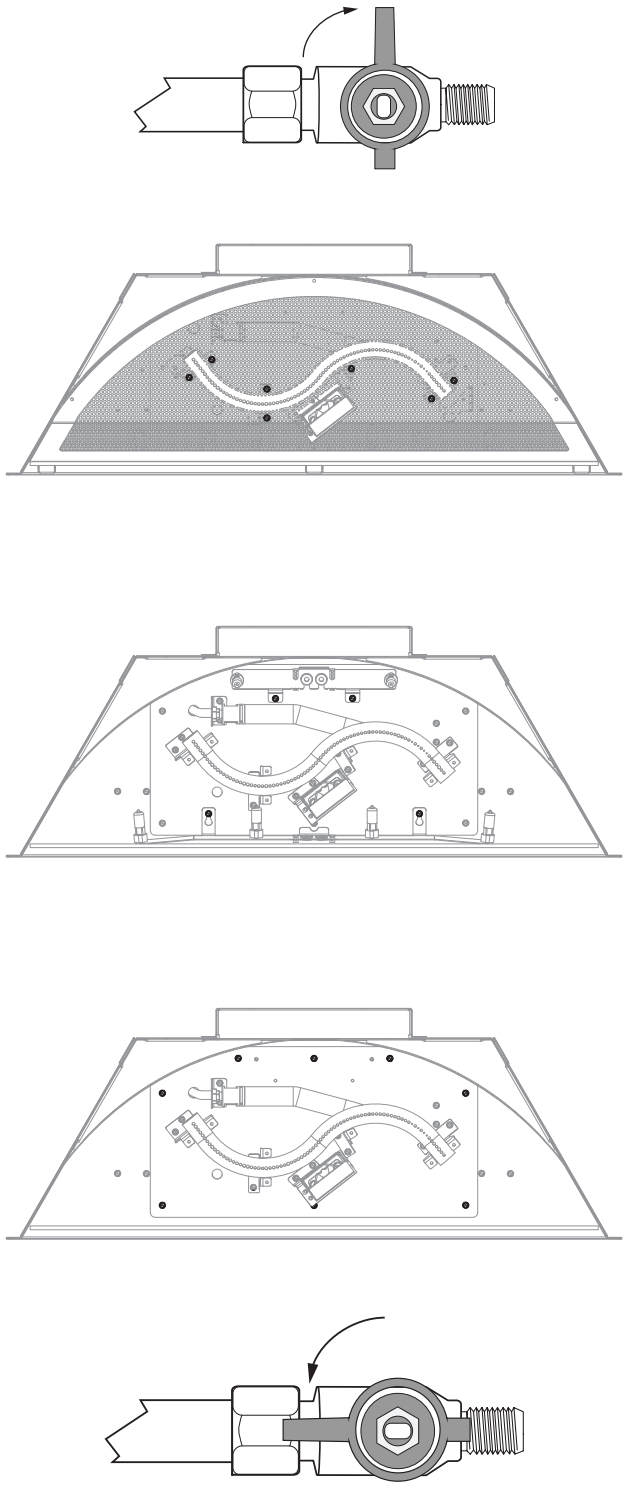

Figure 8.4, Control Board Removal and Installation

9.0 ELECTRICAL INFORMATION

WARNING: Do not use this fireplace if any part has been under water. Immediately call a qualified service technician to inspect this appliance and to replace any part of the control system and any gas control which has been under water.

WARNING - Electrical Grounding Instructions: This appliance is equipped with a three-prong (grounding) plug for your protection against shock hazard and should be plugged directly into a properly grounded three-prong receptacle. Do not cut or remove the grounding prong from this plug.

9.1 Electrical Specifications

This appliance, when installed, must be electrically grounded in accordance with local codes, or in the absence of local codes, with the National Electrical Code, ANSI/NFPA 70, or the Canadian Electrical Code, CSA C22.1.

9.2 Wiring Requirements

- The IFC System Module requires 120V of electricity and/or batteries to operate.
- Using the battery back-up will operate the burner only.
- Optional fan and light components will not function on battery back up power.

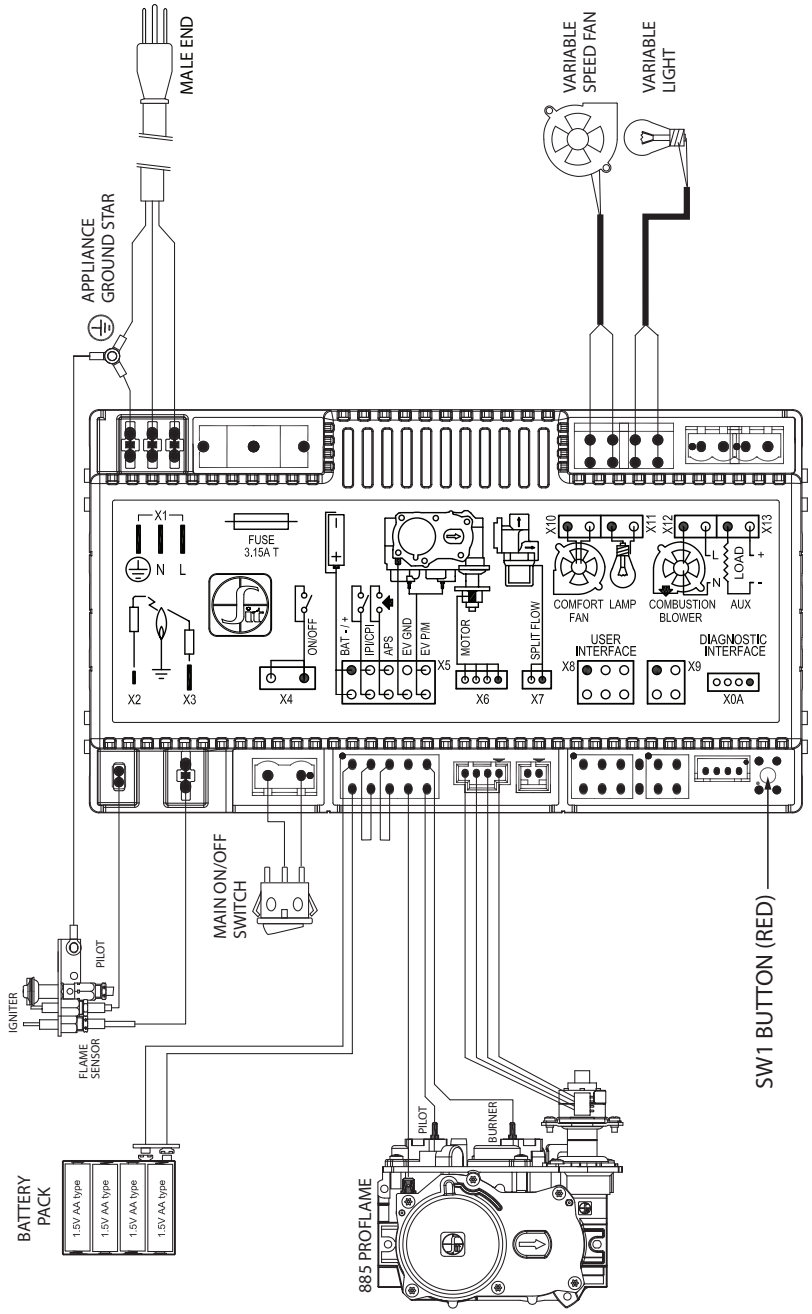

Figure 9.1, Wiring Schematics

9.3 Light Kit

ATTENTION: If converting to propane, complete the conversion before installing light kit. Follow instructions included with the gas conversion kit.

CAUTION: Disconnect all electric power from the fireplace before performing any of these tasks.

NOTE: To avoid damage and prolong the life of the halogen bulbs, never touch with bare hands. Always use a soft cloth when handling.

1. Remove the safety barrier and glass frame assembly.
2. Remove glass media and media dam.
3. Remove (7) screws securing media tray, then lift the cover out of firebox.
4. Loosen, but do not remove (4) screws securing light bars to firebox floor. Slide light bars out away from screws, tipping upwards to expose lamp bases.
5. Install (6) halogen bulbs (included in components packet) into lamp bases.
6. Reattach light bars, securing with screws previously loosened.
7. Reinstall media tray, securing with screws previously removed.
8. Reinstall all components previously removed.

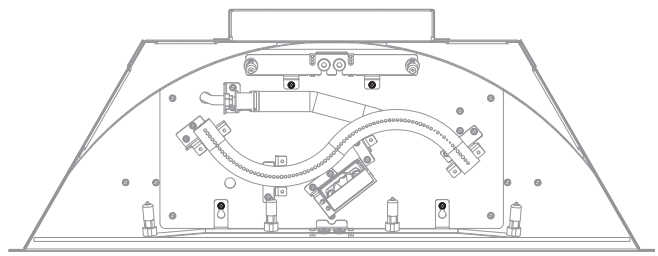

Figure 9.2, Light Bar Screw Location

9.4 #IPI-075 Optional Fan Kit

ATTENTION: Installation of this fan kit should be done only by a qualified installer.

WARNING: Verify household breaker is shut off prior to working on any electrical lines. Disconnect all electric power from fireplace before performing any of these tasks.

This kit includes:

(1) 75 CFM fans

(2) Flange nuts

1. Remove the safety barrier and glass frame assembly.
2. Remove glass media and media dam.
3. Remove the media tray, light kit assembly, and the control board from the firebox. Refer to Section 8.4 Control Board Removal and Installation on page 44 for more information.
4. Insert the fan through the opening and position on the studs at the back of the firebox. Secure with (2) flange nuts.
5. Connect the fan wires to the lead wires on the IFC module. See Figure 9.1 on the previous page.
6. Plug the fan cord in to the IFC module.
7. Reinstall all components previously removed.

10.0 OPERATING INSTRUCTIONS

FOR YOUR SAFETY READ BEFORE OPERATING

WARNING: If you do not follow these instructions exactly, a fire or explosion may result causing property damage, personal injury, or loss of life.

A. This appliance is equipped with an ignition device which automatically lights the pilot. Do not try to light the pilot by hand.

B. **BEFORE OPERATING** smell around the appliance area for gas. Be sure to smell next to the floor because some gas is heavier than air and will settle on the floor.

WHAT TO DO IF YOU SMELL GAS
- Do not try to light any appliance.
- Do not touch any electric switch; do not use any phone in your building.
- Immediately call your gas supplier from a neighbor's phone. Follow the gas supplier's instructions.
- If you cannot reach your gas supplier, call the fire department.

C. Use only your hand to turn the gas control manual valve. Never use tools. If the valve will not turn by hand, do not try to repair it; call a qualified service technician. Force or attempted repair may result in a fire or explosion.

D. Do not use this appliance if any part has been under water. Immediately call a qualified service technician to inspect the appliance and to replace any part of the control system and any gas control that has been under water.

WARNING

Do not operate appliance with the glass front removed, cracked, or broken. Replacement of the glass should be done by a licensed or qualified service person.

Under no circumstances should any solid fuel (wood, coal, paper, cardboard, etc.) be used in this appliance.

Children and adults should be alerted to the hazards of high surface temperature and should stay away to avoid burns or clothing ignition.

CAUTION

Clothing or other flammable material should not be placed on or near the appliance.

Young children should be carefully supervised when they are in the same room as the appliance. Toddlers, young children and others may be susceptible to accidental contact burns. A physical barrier is recommended if there are at risk individuals in the house. To restrict access to a fireplace or stove, install an adjustable safety gate to keep toddlers, young children and other at-risk individuals out of the room and away from hot surfaces.

OPERATING INSTRUCTIONS

1. STOP! Read all the safety information above on this page.
2. Press the wireless remote OFF button.
3. Turn off all electric power to the appliance.
4. This appliance is equipped with an ignition device which automatically lights the pilot. Do not try to light the pilot by hand.
5. Locate the manual valve installed by your qualified service technician.
6. Turn the manual valve clockwise to the OFF position.
7. Wait five (5) minutes to clear out any gas. Then, smell for gas, including near the floor. If you smell gas, STOP! Follow 'B' in the safety information above. If you do not smell gas, go to the next step.
8. Turn the manual valve counterclockwise to the ON position.
9. Turn on all electric power to the appliance.
10. Press the wireless remote ON button.
11. If the appliance will not operate, follow the instructions, "To Turn Off Gas To Appliance" and call your service technician or gas supplier.

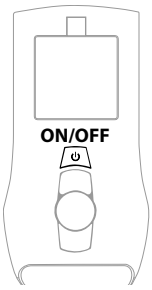

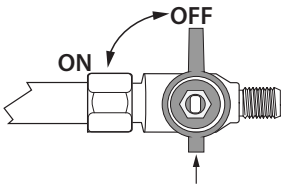

TO TURN OFF GAS TO APPLIANCE

1. Press the wireless remote OFF button.
2. Turn off all electric power to the appliance if service is to be performed.
3. Locate the manual valve installed by your qualified service technician.
4. Turn the manual valve clockwise to OFF position.

NOTE

When this fireplace is initially lit, condensation will appear on the glass. This is normal in all gas fireplaces and will disappear after several minutes. A paint smell will occur during the first few hours of burning. It is recommended to leave the fan off during this period to help speed the paint curing process. This fireplace may produce noises of varying degree as it heats and cools due to metal expansion and contraction. This is normal, and does not affect the performance or longevity of the fireplace.

10.1 Setup Proflame 2 IFC Module

1. Set the main ON/OFF rocker switch in the OFF position.
2. Install (4) AA batteries (not included) into backup battery holder on the control module.
3. Install (3) AAA batteries (included in the components packet) in the remote control battery bay, located at the base of the remote.
4. Connect the IFC Module to an AC power supply.

10.2 Initialize the Control System

IMPORTANT: Remove all packaging and combustible material from the firebox before initializing the control system.

NOTE: Performing the next steps will initiate pilot start-up in manual mode, where the pilot igniter will spark repeatedly. The pilot will ignite if gas is supplied to the fireplace.

1. Locate the red SW1 button the IFC module.
2. Press the SW1 button. The IFC module will BEEP (3) times and illuminate an amber LED. This indicates the receiver is ready to synchronize with the transmitter.
3. Within (5) seconds, push the ON/OFF button on the remote control. The receiver will BEEP (4) times to indicate the transmitter's command is accepted, and is set to the transmitter's particular code. The pilot will automatically ignite.
4. Press the remote control ON/OFF button again. The pilot will extinguish, confirming the remote control command. The control system is now initialized.
5. Set the main ON/OFF rocker switch to ON position for remote control operation of the main burner and fireplace features.

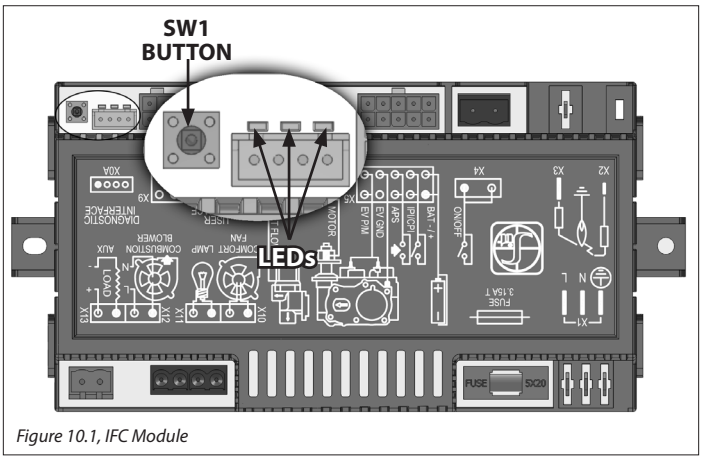

Figure 10.1, IFC Module

10.3 Reset the System for Manual Operation

1. Set the ON/OFF rocker switch to OFF position.
2. Press the red SWI button on the IFC module until it emits (3) beeps and an amber LED is illuminated.
3. Within (5) seconds, press the red SWI button again. This will close synchronization with the remote control. The pilot will automatically light.

- Turn the main burner ON by setting the ON/OFF switch in ON position. The main burner will only operate on HI.
- Turn the main burner OFF by setting the ON/OFF switch in the OFF position. The pilot will remain lit even if burner is turned off, provided CPI mode is turned on.

10.4 Automatic Safety Restart

- This system will execute an automatic turn OFF command for approximately (5) seconds within (24) hours of a continued pilot flame ignition to perform a safety check. This allows the system to verify correct safety functions.
- After the turn OFF sequence is completed, the IFC module will re-execute the latest command.

10.5 Backup Battery Operation

This appliance will operate on the backup battery pack when electric power is interrupted, or in a power outage. The lifespan of the backup batteries depend on various factors, such as the quality of the batteries, number of ignitions, et cetera.

- When the backup battery pack is low, the IFC module will emit a double-beep while receiving an ON/OFF command.
- No commands will be accepted after this alert until the back up batteries are replaced.
- Once replaced, the IFC module will emit a 'beep' as soon as it is powered.

10.6 Control System 7 Day Timeout

- If you have your Proflame 2 system set to CPI (continuous pilot ignition) with **7 consecutive days** without ignition of the main burner, the pilot will turn off. This a standard safety feature of the SIT Proflame 2 system.
- Once you turn CPI on, the **7** day timer will start. If at any time during the following **7** days your main burner ignites, it will reset the timer back to **7** days.
- See Section 10.9.3 Pilot Ignition Selection (IPI/CPI) on page 50 for more information.

How to check if your system is set to CPI:
The LCD screen will display the snowflake icon.

To select the preferred pilot ignition feature,

1. With the system in the OFF position, press the mode key to index the CPI mode icon.
2. Press the up arrow key to activate CPI.
3. Press the down arrow key to return to IPI. A single 'beep' will confirm reception of the command.

To Turn ON the appliance:

1. With the system in the OFF position, press the remote control ON/OFF key to turn ON the appliance.
   A single 'beep' will emit from the IFC module to confirm reception of the command.

The LCD screen will display all active icons, and the IFC module will start the ignition sequence.

10.7 IFC Module Ignition Sequence

The IFC module will try (2) times for ignition, each lasting approximately (60) seconds, with approximately (35) seconds between each attempt.

1. With the system in OFF position, press the remote control ON/OFF key. Approximately (4) seconds after this key is depressed, the IFC module will generate sparks to the pilot hood.
2. First ignition attempt will generate sparks for (60) seconds.
3. If there is no flame ignition (rectification) within the (60) second time frame, the IFC module will stop generating sparks for approximately (35) seconds.
4. After (35) seconds of wait time, the IFC module will generate sparks for another (60) seconds for the second ignition attempt.
5. If there is no positive rectification after (60) seconds, the IFC module will go into a lock out. The red LED will blink (3) times, in intervals, until the system is reset.

10.7.1 Reset IFC Module after Lockout

10.7.1.1 ON/OFF Rocker Switch

1. Set the ON/OFF rocker switch to the OFF position.
2. After approximately (2) seconds, move the switch to the ON position. The ignition sequence will start again.

10.7.1.2 Remote Control ON/OFF Key

1. Press the remote control ON/OFF key to turn the system OFF.
2. After approximately (2) seconds, press the ON/OFF key again. The ignition sequence will start again.

10.7.1.3 Cycling Flame

1. Press the remote control down arrow key during flame adjustment mode to reduce the flame to OFF (indicated by OFF displayed on the LCD screen).
2. After approximately (2) seconds, press the up arrow key. The ignition sequence will start again.

10.8 Additional Diagnostic Information

Low Battery Condition (<4V) Remote Control:

- Battery Icon will appear on LCD remote control display.
- Replace batteries.

Low Battery Condition (<4V) Battery Backup:

- The red LED Indicator will blink (1) time in intervals.
- A low double-beep emits from the IFC control module when it receives an ON/OFF command from the remote control..
- Replace Batteries.

Pilot Flame Error Condition:

- Red LED Indicator will blink (2) times in intervals. Contact your dealer if this occurs.

System Lock Out Condition:

- Red LED Indicator will blink (3) times in intervals.
- Verify gas is turned on.
- Verify sensor is not shorted.
- Follow Section 10.2 Initialize the Control System.

PROFLAME 2 TRANSMITTER

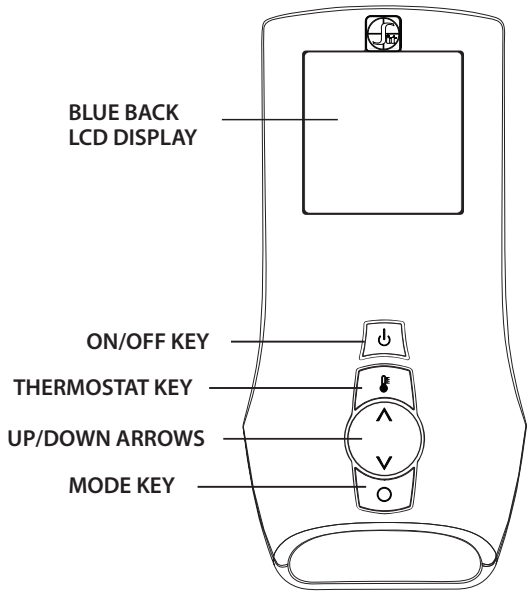

LCD DISPLAY

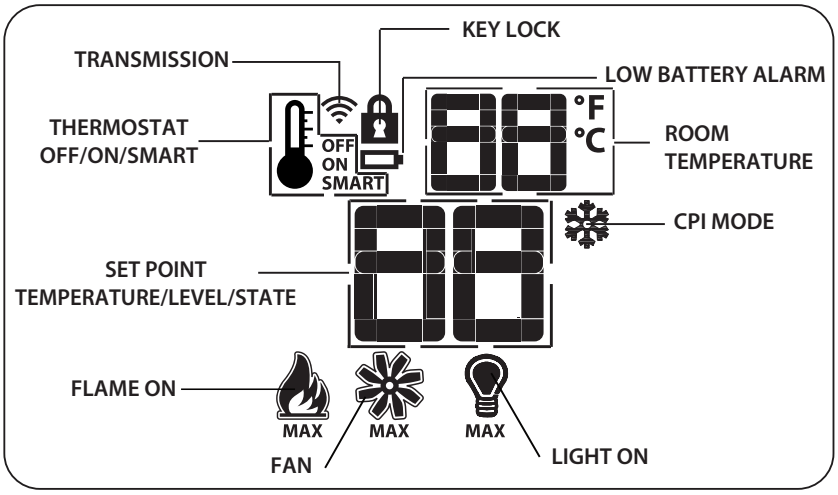

10.9 Remote Control Operation

10.9.1 Temperature Display

1. With the system in the OFF position, simultaneously press the thermostat key and the mode key to change degrees from °F to °C.
2. Visually check the LCD screen to verify either °F or °C is displayed on the right side of the room temperature display.

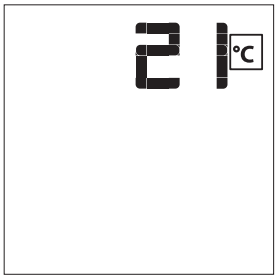

10.9.2 Key Lock

This function locks the keys to avoid unsupervised operation. Once activated, a lock icon will appear on the LCD screen.

1. Simultaneously press the mode key and the up arrow key to activate or deactivate this function.

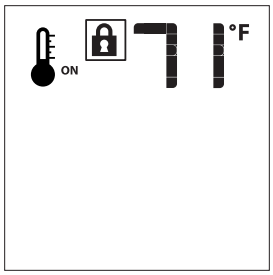

10.9.3 Pilot Ignition Selection (IPI/CPI)

This system has the option of a continuous (standing) pilot. This features allows the system to change from a spark-to-pilot system to the standing pilot option. The standing pilot will keep the firebox warm and establish a draft in the vent, which allows the main burner to ignite with less air-flow disruption.

When the system is OFF, the LCD screen will display the snowflake icon during the setup of either IPI or CPI mode. To select the preferred pilot ignition feature,

1. With the system in the OFF position, press the mode key to index the CPI mode icon.
2. Press the up arrow key to activate CPI.
3. Press the down arrow key to return to IPI. A single 'beep' will confirm reception of the command.

When the system is ON,

IPI mode: LCD screen will not display the snowflake icon

CPI mode: LCD screen will display the snowflake icon

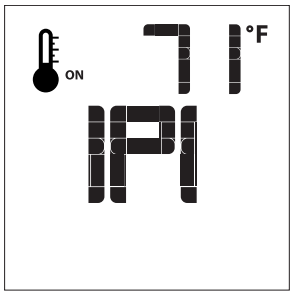

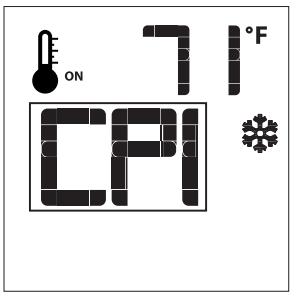

10.9.4 Turn ON the Appliance

1. With the system in the OFF position, press the remote control ON/OFF key to turn ON the appliance.
   A single 'beep' will emit from the IFC module to confirm reception of the command.

The LCD screen will display all active icons, and the IFC module will start the ignition sequence.

10.9.5 Turn OFF the appliance

1. With the system in the OFF position, press the remote control ON/OFF key to turn ON the appliance.
   A single 'beep' will emit from the IFC module to confirm reception of the command.

The LCD screen will only display the room temperature and its icon, and the IFC module will turn off the main burner.

10.9.6 Remote Control Flame Adjustment

This control system has (6) flame levels. If the smart thermostat operation is activated, then the manual adjustment of the flame height will be disabled.

1. Verify the system is in the ON position and the flame level is set at maximum.
2. Press the down arrow key once to reduce flame height by one level until the flame is turned off.
3. Press the up arrow key once to increase flame height by one step. If the up arrow key is pressed while the system is on, but the flame is off, the flame will ignite on HI.
4. A single 'beep' will confirm reception of the command.

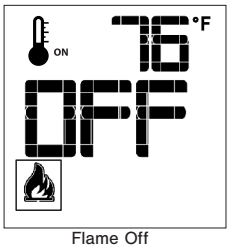

Flame Off

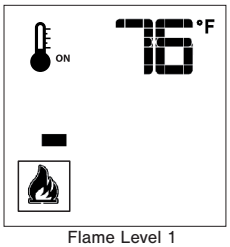

Flame Level 1

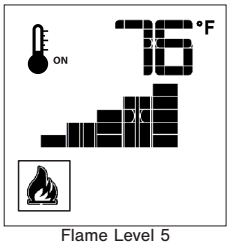

Flame Level 5

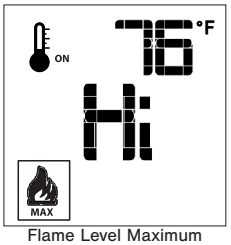

Flame Level Maximum

10.9.6.1 Deactivate Flame Modulation

1. Verify all (3) AAA batteries are installed in the remote control battery bay.
2. Remove (1) AAA battery.
3. Press and hold the on/off key and the mode key at the same time.
4. Reinsert (1) AAA battery.
5. While still holding the on/off key, let go of **ONLY** the mode key.
6. Index over to the flame graphic on the LCD screen to edit. Use the up or down arrow key to choose 'ON' or 'OFF'.

10.9.7 Remote Control Thermostat Operation

10.9.7.1 Room Thermostat

The remote control can operate as a room thermostat. The thermostat can be set to a desired temperature to control a room's comfort level. To activate this function,

1. Press the thermostat key. The LCD screen will display a temperature bulb graphic, the room temperature and set temperature.
2. To adjust the set temperature, press the up or down arrow keys until the desired temperature is displayed on the LCD screen.

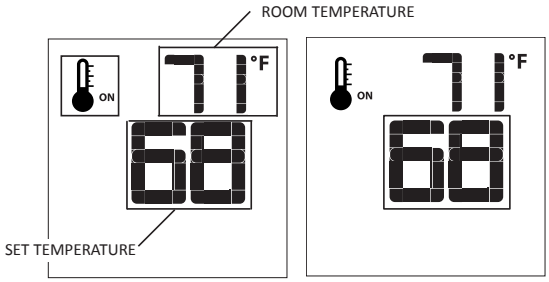

10.9.7.2 Smart Thermostat

The smart thermostat function will adjust the flame height based on the set temperature and the actual room temperature. The smart thermostat function automatically adjusts the flame down when the room temperature reaches the set point. To activate this function,

1. Press the thermostat key until the 'SMART' appears on LCD screen on the right side of the temperature bulb graphic.
2. To adjust the set temperature, press the up or down arrow keys until the desired temperature is displayed on the LCD screen.

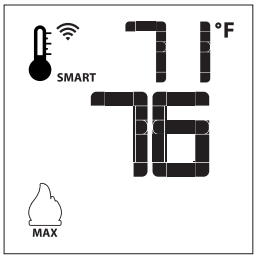

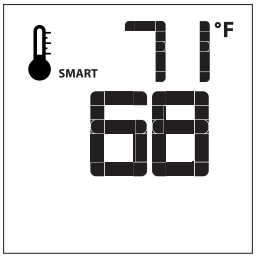

10.9.7.3 Deactivate Remote Control Thermostat Operation

The thermostat operation function can be deactivated. The remote control will still operate the main burner on and off, and function flame, fan, and light modulation. To deactivate this function,

1. Verify all (3) AAA batteries are installed in the remote control.
2. Remove (1) AAA battery.

3. While reinserting the battery, push and hold the thermostat key. The temperature bulb graphic will not be displayed on the LCD screen.
4. To reactivate remote thermostat operation, follow the same key sequence procedure above. The temperature bulb graphic will reappear on the LCD screen.

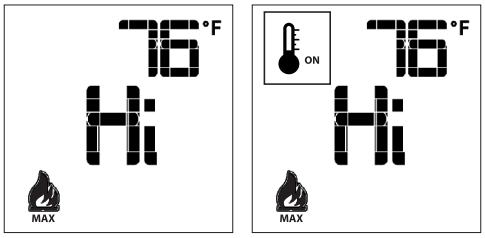

10.9.8 Fan Speed Control (optional)

Fan speed can be adjusted through (6) speeds. To activate this function,

1. Press the mode key to index to the fan control icon.
2. Press the up or down arrow keys to turn on, off, or to adjust fan speed.

Thermostat mode: Fan(s) have a (5) minute delay time when the fireplace is lit. This allows time for heat to build in fireplace before fan operation. The fan will continue to operate for approximately (12) minutes after the fireplace has been turned off.

Manual mode: Fan(s) will operate at previous setting. There is no delay in start up or stop time.

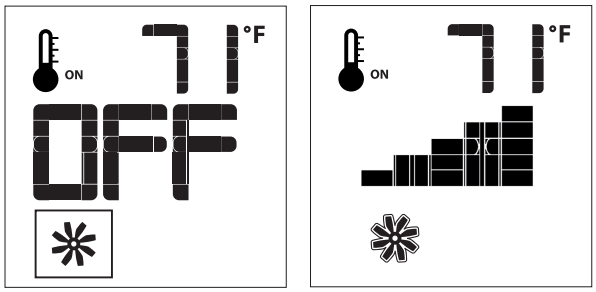

10.9.9 Accent Light Kit (if applicable)

The light intensity can be adjusted through (6) levels.

1. Press the mode key to index to the light icon.
2. Press the up or down arrow keys to adjust the intensity level.
3. A single 'beep' will confirm reception of the command.

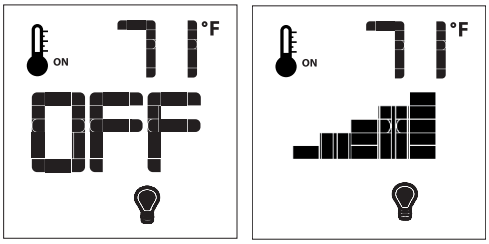

10.9.9.1 Deactivate Light Kit Modulation

1. Verify all (3) AAA batteries are installed in the remote control battery bay.
2. Remove (1) AAA battery.
3. Press and hold the on/off key and the mode key at the same time.
4. Reinsert (1) AAA battery.
5. While still holding the on/off key, let go of **ONLY** the mode key.
6. Index over to the bulb graphic on the LCD screen to edit. Use the up or down arrow key to choose 'SET' or 'CLR'.

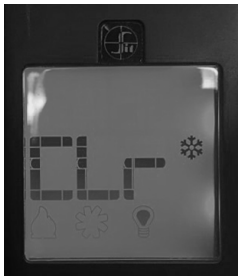

10.9.10 Remote Control Low Battery Detection

Remote control battery lifespan depends on various factors including battery quality, number of ignitions, changes to room thermostat set point, etcetera.

- When the remote control battery are low, a battery icon will appear on the LCD display before all battery power is lost.
- When the batteries are replaced, this icon will disappear.

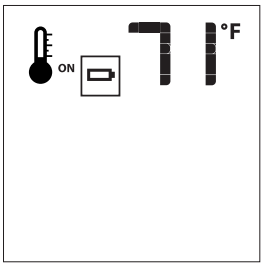

11.0 ADJUSTMENT

11.1 Pressure Testing

NOTE: The appliance and its appliance main gas valve must be disconnected from the gas supply piping system during any pressure testing of the system at test pressures in excess of ½ psi (3.5 kPa).

IMPORTANT: Pressure check taps for manifold (outgoing) and inlet (incoming) pressure have been incorporated into the valve. The pressure tap marked OUT measures outgoing pressure. The pressure tap marked IN measures incoming pressure.

11.1.1 Inlet Pressure Test

NOTE: Make sure to apply incoming pressure test with all other gas appliances on, or at full capacity in the house for proper pressure reading.

IMPORTANT: If the inlet pressure reading is too high or too low, contact the gas company. Only a qualified gas service technician should adjust incoming gas pressure.

1. Loosen the inlet (IN) pressure tap by turning screw counter-clockwise. See (A) in Figure 11.1.
2. Attach manometer using a ¼ in (6mm) I.D. hose.
3. Light pilot and burner. Check pressure to ensure it is between the minimum and maximum recommended pressure settings.
4. Turn off burner and pilot.
5. Disconnect hose and tighten the inlet (IN) pressure tap by turning screw clockwise. Screw should be snug. Do not over tighten.
6. Relight pilot and burner. Then reattach manometer to the inlet pressure tap (A) to verify the tap is completely sealed. Manometer should read no pressure.

11.1.2 Manifold Pressure Test

1. Light pilot.
2. Loosen manifold (OUT) pressure tap by turning screw counter-clockwise. See (B) in Figure 11.1.
3. Attach manometer to pressure tap using a ¼" (6mm) I.D. hose.
4. Light burner. Check manometer reading.
5. Turn burner and pilot off.
6. Disconnect manometer hose and tighten the manifold (OUT) pressure tap by turning screw clockwise. Screw should be snug. Do not over tighten.
7. Attach the manometer to the manifold pressure tap (B) to verify it is completely sealed. The manometer should read no pressure when pilot and burner are on.

Table 11.1, Inlet Pressures

Fuel	Natural Gas	Propane
Gas Supply	**Min - Max**	**Min - Max**
Inlet Pressure Tap (A)	5" - 10.5"WC (1.25 - 2.62 kPa)	12" - 13"WC (2.99 - 3.24 kPa)

Table 11.2, Manifold Pressure

Fuel	Natural Gas	Propane
Gas Supply	**Low - High**	**Low - High**
Manifold Pressure Tap (B)	1.1" - 3.8"WC (.27 - .95 kPa)	2.9" - 11"WC (.72 - 2.74 kPa)

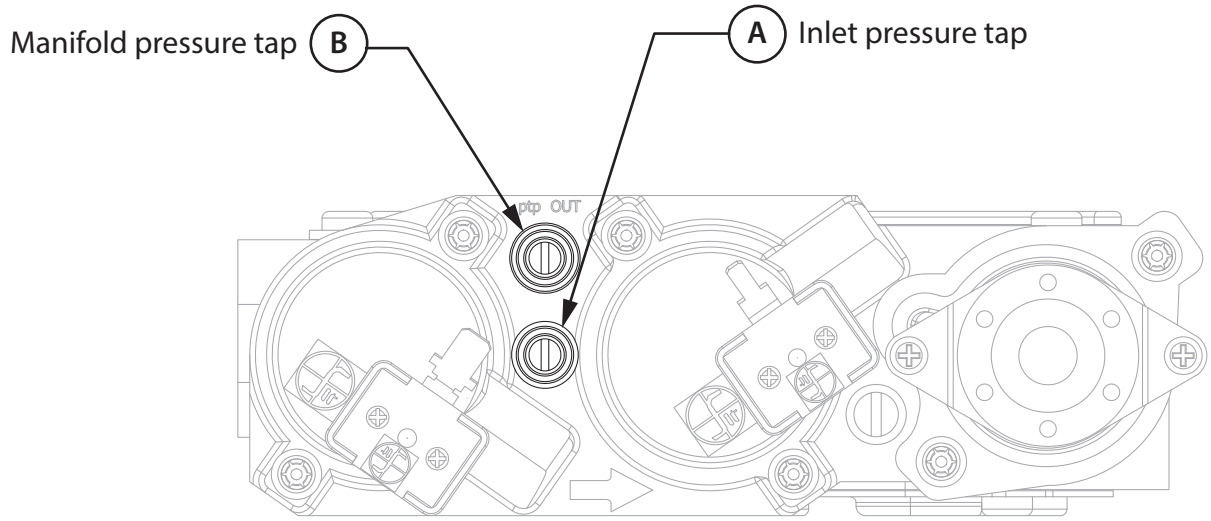

Figure 11.1, Pressure Check Taps

11.2 Flame Appearance Adjustments

WARNING: To avoid property damage or personal injury, allow the fireplace ample time to cool before making any adjustments.

Burner flame appearance and characteristics are affected by altitude, fuel quality, venting configuration, and other factors. After installation, this appliance may need additional adjustments to achieve optimum flame appearance and visual aesthetics.

11.2.1 Burner Venturi

WARNING: VENTURI ADJUSTMENT MUST BE DONE BY A QUALIFIED SERVICE TECHNICIAN.

NOTE: Burner venturi air shutter settings have been factory set. Refer to Table 11.3.

When this appliance is first lit, the burner flames will appear blue. During the first 15 minutes of operation, flame appearance will gradually turn to the desired yellow appearance. If the flames remain blue, or become dark orange with evidence of sooting (black tips), adjustment of the air shutter opening may be necessary.

Regardless of venturi orientation, closing the air shutter will achieve a desired yellow flame, but may produce soot on the glass. Opening the air shutter will cause a short, blue flame that may lift off the burner.

Table 11.3, Factory Set Venturi Openings

Fuel	Air Shutter Opening
Natural Gas	1/8"(3mm)
Propane	5/8"(16mm)

11.2.1.1 Venturi Adjustment

1. Remove the safety barrier, glass frame assembly, glass media, and media damn.
2. Remove media dam, burner cover, burner, and burner venturi housing.
3. Loosen screw on burner venturi and adjust as necessary. Re-tighten screw.
4. Reinstall all components previously removed.

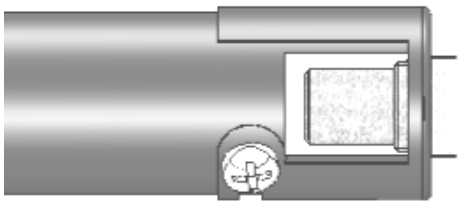

Figure 11.2, Burner Venturi

IMPORTANT: Slight adjustments to the venturi opening will create dramatic results. Adjust at slight increments until desired look is achieved. Always burn the fireplace for at least 15 minutes, and always allow the appliance ample time to cool before making any further adjustments.

Table 11.4, Venturi Adjustment Guidelines

Flame Characteristic	Cause	Solution
Dark, orange flame with black tips	Venturi closed too far	Open venturi slightly
Short, blue flames	Venturi open too far	Close setting slightly
Lifting (ghosting) flames	Gas pressure too high Venturi closed too far	Check manometer settings Open venturi setting slightly

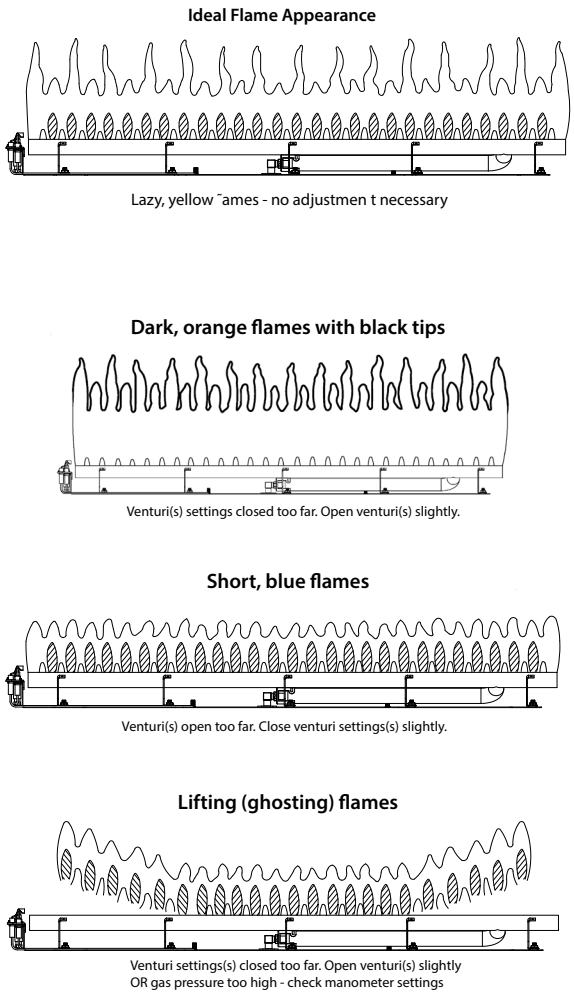

Figure 11.3, Flame Appearance and Characteristics

11.2.2 Vent Restriction (after installation)

WARNING: To avoid property damage or personal injury, allow the fireplace ample time to cool before making any adjustments.

WARNING: Improper vent installation may cause the burner flames to lift or "ghost." Perform a visual check on flame appearance after restrictor adjustment to ensure proper performance.

Vertical terminations may display an active, compact flame. If this appearance is not desirable, a restrictor may need to be installed or modified after vent termination installation. Access to the vent exit for restriction can be reached through the fireplace baffle. Allow the fireplace to burn for 15 minutes before making any adjustments.

Table 11.5, Restrictor Adjustment Guidelines

Flame Appearance	Draft Problem	Solution
Short, flickering	Excessive draft Not enough restriction	Add restrictor
Lifting or ghosting*	Insufficient draft	Remove inner ring(s) on restrictor, or Remove restrictor

*If flames continue to lift or ghost after opening the restrictor and verifying correct vent installation, shut off the gas supply and call a qualified service technician.

11.2.2.1 Restrictor Installation

1. Remove the safety barrier and glass frame assembly.
2. Remove refractory (if installed) and log set.
3. Remove (3) screws securing the fireplace baffle.
4. Bend the tabs on the restrictor (included in fireplace components packet) to approximately 80° angles. This will create tension when the restrictor is inserted into the exhaust pipe.
5. Insert restrictor into the 4"(102mm) exhaust pipe with the tabs pointing towards you.
6. Reinstall fireplace baffle with (3) screws previously removed.
7. Reinstall all components previously removed.

11.2.2.2 Restrictor Modification

1. Remove the safety barrier and glass frame assembly.
2. Remove refractory (if installed) and log set.
3. Remove (3) screws securing the fireplace baffle.
4. Remove the restrictor from the 4"(102mm) exhaust pipe by pulling the restrictor down and out.
5. Make necessary modifications to achieve desired flame appearance.
6. Insert restrictor into the 4"(102mm) exhaust pipe with the tabs pointing towards you.
7. Reinstall fireplace baffle with (3) screws previously removed.
8. Reinstall all components previously removed.

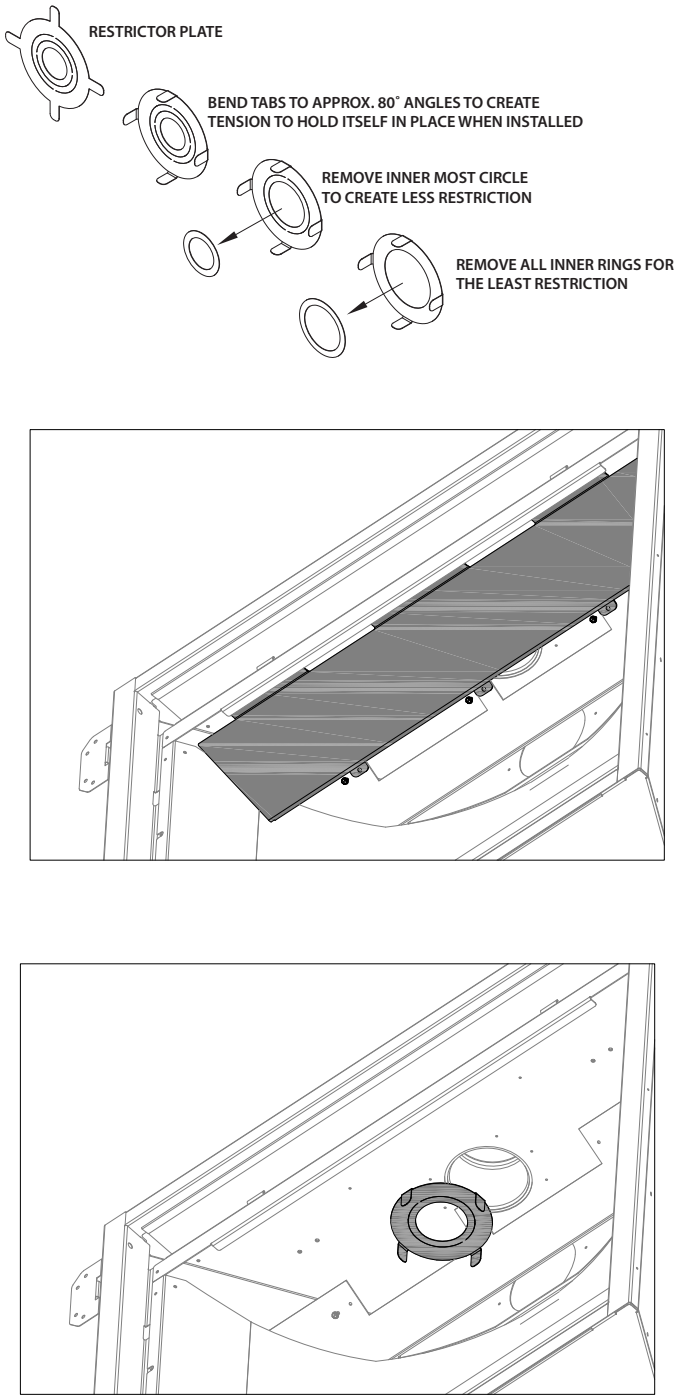

Figure 11.4, Restrictor Installation and Modification

12.0 TROUBLESHOOTING

ATTENTION: Troubleshooting must be performed by a qualified technician.

Before proceeding with the steps in the following troubleshooting guide,

- Verify proper 120VAC power supply to the control module.
- Verify the control module battery pack and the remote control batteries are fresh and installed with correct polarity.
- Verify all connections between the wire harnesses and the system components are proper and positive.
- Verify the communication link is established between the remote control and the IFC module.
- Verify inlet pressure meets the recommended inlet pressure. If necessary, adjust line pressure regulator.

Issue	Cause	Solution
Pilot will not light	Electrical power interrupted or disconnected	Restore electrical power to appliance or use battery back-up.
	Wiring disconnection	Ensure batteries are fully charged if using battery back-up as power source. Use wiring schematic in this manual to determine that all wiring connections are secure and correct.
	Gas supply turned off	Check remote shut-off valves from the appliance. Usually there is a valve near the main gas line. There may be more than (1) valve between the appliance and main gas line.
Pilot will not stay lit	No propane in tank	Check propane tank. Refill if necessary.
	Low gas pressure	Consult a plumber or a gas supplier. Can be caused by situations such as a bent line, too narrow diameter or pipe, or a low line pressure.
	Pilot flame not making contact with the flame rectification sensor on the pilot assembly	Verify the pilot flame envelopes the top of the flame sensor and extends far enough onto burner for ignition. To adjust pilot flame, turn pilot adjustment screw on the gas valve clockwise to decrease flame, and counterclockwise to increase flame.
	Pilot adjustment screw not sealed	Seal pilot adjustment screw. Do not over-tighten.
Pilot flame always on, or will not extinguish	Control system set to CPI mode	Set control system to IPI mode.
Main burner flame will not light	ON/OFF rocker switch in OFF position	Switch rocker switch to ON position.
	Gas supply turned off	Check for multiple shut-offs in the supply line. Verify gas supply is turned on.
	Low gas supply	Consult with plumber or gas supplier. Check propane tank. Refill if necessary.
	Wiring disconnection or improper wiring	Check for faulty or incorrect wiring.
	Plugged main burner orifice	Remove blockage.
	Pilot flame	Verify the pilot flame is properly directed to ignite burner. See pilot flame troubleshooting above.
	Remote control not working properly	Replace batteries.
	No call for heat	Verify remote control is powered ON and thermostat operation is turned OFF.

Issue	Cause	Solution
Pilot and burner extinguish while in operation	No propane in tank	Check propane tank. Refill if necessary.
	Incorrect glass assembly installation	Refer to Section 8.1 Glass Frame Assembly on page 42.
	Incorrect vent cap installation	Adjust if necessary.
	Vent cap blockage	Remove debris if necessary.
	Improper pitch on horizontal venting	¼" (6mm) rise per foot (30cm) is required on horizontal venting
	Inner vent pipe leaking exhaust gases back into firebox	Check for leaks and repair if necessary.
	Excessive draft	Restrictor setting may need to be adjusted.
Soot appears on glass	Improper glass media placement	Refer to Section 8.3 Glass Media on page 43.
	Improper venturi setting	Venturi air shutter may need to be opened slightly to allow more air into the gas mix. Refer to Section 11.2.1 Burner Venturi on page 54.
	Incorrect vent cap installation	Adjust if necessary.
	Vent cap blockage	Remove debris if necessary.
	Improper pitch on horizontal venting	¼" (6mm) rise per foot (30cm) is required on horizontal venting
Flame burns blue and lifts off burner	Improper venturi setting	Venturi air shutter may need to be opened slightly to allow more air into the gas mix. Refer to Section 11.2.1 Burner Venturi on page 54.
	Incorrect vent cap installation	Adjust if necessary.
	Blockage or leakage of the vent system	Check the vent pipes for leaks, and the vent cap for debris. Repair the vent pipes or remove debris from vent cap, if necessary.
No reaction to command	Battery back batteries or remote control batteries low	Replace batteries.
	No communication between remote control and IFC module	Reprogram remote control to IFC module.
	A maximum number of failed ignitions or flame restorations has been reached	Reset IFC module.

13.0 MAINTENANCE

ATTENTION: Installation and repair should only be done by a qualified service person. The appliance should be inspected before use and at least annually by a professional service person. More frequent cleaning might be required due to excessive lint from carpeting, bedding material, et cetera. It is imperative that control compartments, burners, and circulating air passageways of the appliance be kept clean. Use a vacuum to clean all components.

WARNING: The appliance area must be kept clear and free from combustible materials, gasoline and other flammable vapors and liquids.

13.1 Firebox

Performed by: Qualified Service Person

Frequency: Annually

Action:

- Vacuum and clean any debris in the firebox that is not supposed to be there.
- Inspect and operate the bottom latch assembly. Verify the assembly is free from obstruction to operate. The handles must have spring tension but be able to move forward freely.

13.2 Fan

CAUTION: Label all wires prior to disconnection when servicing controls. Wiring errors can cause improper and dangerous operation. Verify proper operation after servicing.

Performed by: Qualified Service Person

Frequency: Every 6 months

Action:

- Disconnect the fan from electrical current and vacuum.
- The bearings are sealed and require no oiling.

13.3 Vent System

NOTE: If the vent-air intake system is disassembled for any reason, reinstall per instructions provided with installation. Refer to Section 7.0 Venting on page 29.

Performed by: Qualified Service Person

Frequency: Annually

Action:

- Examination of the vent system is required.
- The flow of combustion and ventilation air must not be obstructed.

13.4 Glass Assembly

CAUTION: Do not operate appliance with the glass assembly removed, cracked, or broken. Use protective gloves to handle any broken or damaged glass assembly components.

WARNING: Do not use substitute materials.

WARNING: Avoid striking or slamming glass assembly. Avoid abrasive cleaner. DO NOT clean glass while it is hot.

IMPORTANT: Any safety screen, guard, or barrier removed for servicing the appliance must be replaced prior to operating the appliance.

Performed by: Homeowner

Frequency: Annually

Action:

- Prepare a work area large enough to accommodate the glass assembly on a flat, stable surface.
- Remove safety screen and glass frame assembly.
- Clean glass window with a suitable fireplace glass cleaner using a soft cloth. Abrasive cleaners must not be used. Be careful not to scratch the glass when cleaning.
- Reinstall glass assembly and safety screen. Do not operate fireplace without safety screen.

Performed by: Qualified Service Person

Frequency: Annually

Action:

- Clean glass window with a suitable fireplace glass cleaner using a soft cloth. Abrasive cleaners must not be used. Be careful not to scratch the glass when cleaning.
- Inspect the glass for cracks, scratches, and nicks.
- Verify the glass assembly is properly intact and not damaged.
- Replace the glass and the assembly #701-005T as necessary.
- Only Hussong Mfg. Co., Inc. will supply the replacement of glass assembly as a complete unit.

13.5 Burner and Pilot System

The burner assembly may be removed for easier access. Refer to Section 8.4 Control Board Removal and Installation on page 44 for removal and installation. Verify gas supply is turned on and filled. Consult with plumber or gas supplier as necessary.

Performed by: Qualified Service Person

Frequency: Annually

Action:

- Vacuum all components of the burner system.
- Check all accessible gas-carrying tubes, connections, pipes and other components for leaks.
- Inspect the operation of the flame safety system Pilot or Flame rectification device. Visually check pilot light when in operation.
- Inspect and ensure the lighting of the main burner occurs within (4) seconds of the main gas valve opening. Check for faulty or incorrect wiring and correct or replace as necessary. Inspect primary air openings (burner ports) for blockage, especially near the pilot.
- Visually check burner flame pattern when in operation. Flames should be steady, not lifting or floating.
- Test and measure the flame failure response time of the flame safety system. It must de-energize the safety shutoff in no more than (30) seconds.

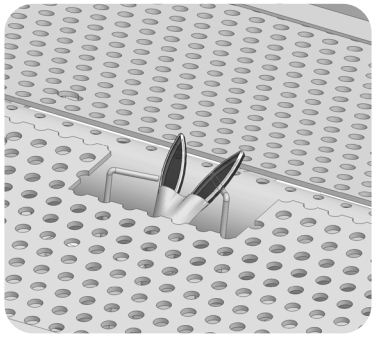

Pilot Flame

Ideal Flame Appearance

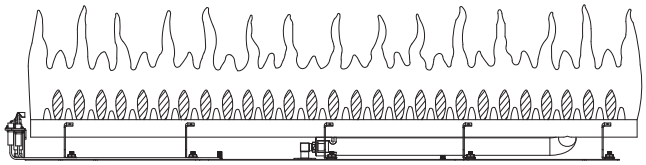

Lazy, yellow ˜ames - no adjustmen t necessary

Figure 13.2, Pilot and Burner Correct Flame Appearance

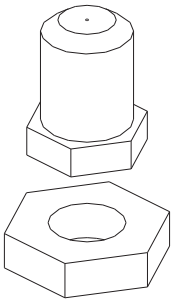

Burner oriÿce

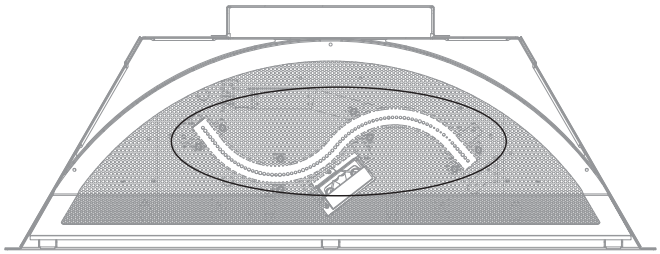

BURNER PORTS

Figure 13.1, Burner System

14.0 REPLACEMENT PARTS LIST

Replacement parts are available through your local dealer. Contact your local dealer for availability and pricing.

The following warning is for replacement parts for this appliance.

WARNING: This product can expose you to chemicals including Lead, which is [are] known to the State of California to cause cancer, birth defects, or other reproductive harm. For more information, visit www.P65Warnings.ca.gov.

CONTROL BOARD AND PARTS			
Control Board - NG	B36G-150A	Valve Step Motor - NG	700-504
Control Board - Propane	B36G-151A	Valve Step Motor - Propane	700-504-1
SIT IPI Gas Valve - NG	700-567	18" Flexible Gas Line - Black	700-213B
SIT IPI Gas Valve - Propane	700-567-1	Flexible Gas Line - Valve to Burner Connection	700-226F
Proflame 2 IFC Board	700-652	NG Burner Orifice #43	700-243
IFC Wire Harness Assembly	700-653	Propane Burner Orifice #53	700-253
Pilot Assembly - NG	700-596A	Conversion Kit - NG	NCK-B36G-SPB
Pilot Assembly - Propane	700-596A-1	Conversion Kit - Propane	LCK-B36G-SPB
Transmitter (Remote Control)	700-408	Burner Tube	B36G-035A
.023N Pilot Orifice - NG	700-123	Media Tray	B36G-350B
.014LP Pilot Orifice - Propane	700-114		

GLASS AND GLASS GASKET	
26-1/4" x 31-3/8" Glass with Gasket	701-005T
Glass Gasket	900-006
Valance	B36-005
Glass Media Dam	701-006

SAFETY BARRIERS	
Full Rectangular Screen Front	B36-FRSF2
Prairie Screen Front	B36-PSF2
Rectangle Screen Front	B36-RSF2
Arched Mission Screen Front	B36A-MSF2
Arched Full Prairie Door Screen Front	B36A-FPDSF2
Rectangular Mission Screen Front	B36R-MSF2
Portrait Screen Front	B36-PTF2

LIGHT KIT	
Light Kit (bottom)	B36-GLKT
20W 130V Halogen Bulb	600-676

FAN KIT	
Fan Kit	IPI-075

ADDITIONAL COMPONENTS	
4" Restrictor Plate	900-085
Manual Gas Shut-off Valve	700-203
Bottom Frame	B36-201B
Vent Heat Shield Assembly	B36G-HHS

Hussong Manufacturing Co., Inc.
P.O. Box 577
204 Industrial Park Drive
Lakefield, MN 56150-0577
USA
BAY-36-G

LIMITED LIFETIME WARRANTY

Warranty Coverage

Hussong Manufacturing Company, Inc. (Hussong Mfg.) warrants this Kozy Heat gas appliance from the date of purchase to the original purchaser, that it is free of defects in materials and workmanship at the time of manufacture. Registering your fireplace warranty does not require any documents to be sent in to Hussong Mfg. Please retain your proof of purchase reflecting the date of purchase along with the serial number and model of your fireplace for any future warranty claims.

If a defect is noted within the warranty period, the customer should contact their authorized dealer for service within 30 days.

30 Days: Parts & Labor*

- Paint
- Light bulbs
- Gasket material
- Glass media and media dam

Year 1: Parts & Labor*

- All parts and material except the items listed in the 30 day warranty and any exclusions or limitations that may apply.

Hussong Mfg. will issue labor reimbursement to an authorized dealer only. Hussong Mfg. will not be liable for charges occurred as a result of any service performed by a non-authorized service provider, without pre-authorization.

Years 2 through Lifetime: Parts Only

- Firebox
- Heat Exchanger
- Logs
- Burner tube or pan
- Outer shell
- Heat shield(s)
- Front Viewing Glass (thermal shock only)
- Refractory Firebox liner (excluding enamel and glass panels)

EXCLUSIONS AND LIMITATIONS

1. This appliance must be installed by a licensed, authorized service technician or contractor. It must be installed, operated and maintained at all times in accordance with the instructions in the owner's manual or the warranty is void.
2. This warranty is nontransferable and is made to the original purchaser only.
3. This warranty excludes standard wear and tear of the appliance which is considered normal usage over time.
4. Discoloration and some minor expansion, contraction or movement of certain parts, resulting in noise, is normal and not a defect.
5. Warranty is automatically voided if the appliance's serial number and/or testing label is removed or if the appliance is altered or tampered with in any way.
6. Warranty is void if the appliance is subject to submersion in water or prolonged periods of dampness or condensation. Any damage to any part of the appliance due to water or weather damage which is the result of, but not limited to, improper chimney/venting installation will also render this warranty void.
7. This warranty does not cover installation and operational related problems such as environmental conditions, nearby trees, buildings, hilltops, mountains, inadequate venting or ventilation, excessive offsets, negative air pressures caused by any mechanical systems.
8. Chimney components and other Non-Hussong Mfg. accessories used in conjunction with the installation of this appliance are not covered under this warranty.
9. Damage to plated surfaces or accessories, if applicable, caused by scratches, fingerprints, melted items or other external sources left on the surfaces from the use of cleaners is not covered under this warranty.
10. It is expressly agreed and understood that this warranty is Hussong Mfg.'s sole obligation and purchaser's exclusive remedy for defective fireplace equipment. Hussong Mfg. is free of liability for any damages caused by this appliance, as well as inconvenience expenses and materials. Incidental or consequential damages are not covered by this warranty. In some states, the exclusion of incidental or consequential damage may not apply. Hussong Mfg. shall not be held to implied warranties and this warranty shall replace all previous warranties.
11. This limited lifetime warranty is the only warranty supplied by Hussong Mfg. Any warranties extended to the purchaser by the dealer/distributor, whether expressed or implied, are hereby disclaimed and the purchaser's recourse is expressly limited to the warranties set forth herein.
12. Any part repaired or replaced during the limited warranty period will be warranted under the terms of the limited warranty for a period not to exceed the remaining term of the original limited warranty.
13. Any replacement part repaired after the warranty period will include a 90 day parts coverage
14. Hussong Mfg. may require the defective part to be returned using a pre-authorized RGA number or a photo of the defective component. Failure to provide either can result in a denied claim.
15. This warranty does not cover the appliances ability to heat a desired space, as there are many factors that can impact the heating performance in each home. Consideration should be implied to the appliance's location, room size, home design, environmental conditions, insulation, and tightness of the home.
16. Hussong Mfg. reserves the right to make changes at any time, without notice, in design, material, specifications, and prices. Hussong Mfg. reserves the right to discontinue models and products.

July 2018