HUSSONG MANUFACTURING

KOZY HEAT FIREPLACES

Quality Fireplaces for Life

INSTALLATION AND OPERATION MANUAL

INSTALLER: LEAVE THIS MANUAL WITH THE APPLIANCE.

CONSUMER: RETAIN THIS MANUAL FOR FUTURE REFERENCE.

DO NOT DISCARD

Models: #PRC-36
#PRC-36-IPI
PRINCETON

DIRECT VENT FIREPLACE

This appliance may be installed in an aftermarket permanently located, manufactured (mobile) home, where not prohibited by local codes.
A manufactured home (USA only) or mobile home OEM installation must conform with the *Manufactured Home Construction and Safety Standard, Title 24 CFR, Part 3280*, or when such a standard is not applicable, the Standard for *Manufactured Home Installations, ANSI/NCSBCS A225.1*, or Standard for *Gas Equipped Recreational Vehicles and Mobile Housing, CSA Z240.4*

WARNING: If the information in these instructions are not followed exactly, a fire or explosion may result, causing property damage, personal injury or loss of life.

- **Do not store or use gasoline or other flammable vapors and liquids in the vicinity of this or any other appliance.**

IF YOU SMELL GAS:

- **Do not light any appliance.**
- **Do not touch any electrical switch: do not use any phone in your building.**
- **Immediately call gas supplier from a neighbors phone. Follow the gas supplier instructions.**
- **If you cannot reach your gas supplier, call the fire department.**
- **Installation and service must be performed by a qualified installer, service agency or the gas supplier.**

This appliance is only for use with the type (s) of gas indicated on the rating plate.
A conversion kit is supplied with the appliance.

WARNING

HOT GLASS WILL CAUSE BURNS.

DO NOT TOUCH GLASS UNTIL COOLED.

NEVER ALLOW CHILDREN TO TOUCH GLASS.

NATIONAL FIREPLACE INSTITUTE NFI CERTIFIED www.nficertified.org

We recommend that our gas hearth products be installed and serviced by professionals who are certified in the U.S. by the National Fireplace Institute® (NFI) as NFI Gas Specialists.

Tested & Listed By O-T-L C US Portland Oregon USA
OMNI-Test Laboratories, Inc.

Report No. 216-S-10-5

www.kozyheat.com

APRIL 2011
PR-36-R-13

INTRODUCTION

Read this manual before installing or operating this appliance.
Please retain this owner's manual for future reference.

CONGRATULATIONS!

We welcome you as a new owner of a Kozy Heat gas fireplace. Kozy Heat products are designed with superior components and materials and assembled by trained craftsmen who take pride in their work. The burner and valve assembly are 100% test-fired and the complete fireplace is thoroughly inspected before packaging to ensure that you receive a quality product. Our commitment to quality and customer satisfaction have remained the same for over 30 years. We offer a complete line of gas and wood fireplaces, unique cabinets and stylish accessories to compliment any décor. Adding a fireplace is one of the best ways to increase the value of your home and we are proud to offer a network of dealers throughout the country to help make your experience everything you imagine. We pride ourselves in being dedicated to not only function and reliability, but customer safety as well. We offer our continual support and guidance to help you achieve the maximum benefit and enjoyment from your Kozy Heat gas fireplace.

Jim Hussong
President

Dudley Hussong
Board Chairman

Homeowner Reference Information
We recommend that you record the following information about your fireplace.

Model Name:_____ Date purchased/installed:_____

Serial Number:_____ Location on fireplace:_____

Dealership purchased from:_____ Dealer Phone:_____

Notes:_____

_____

_____

TABLE OF CONTENTS

INTRODUCTION	
Introduction and Homeowner Reference Information	1
CONTENTS	
Table of Contents	2
SAFETY INFORMATION	
Safety Information	3
FEATURES	
Features	4
COMMONWEALTH OF MASSACHUSETTS INFORMATION	
Commonwealth of Massachusetts Information	5
SPECIFICATIONS	
Fireplace Dimensions	6-7
Clearances	7
Components List	8
Installation Overview	8
Placement Clearance Requirements	8
PREPARE THE FIREPLACE	
Stand-Off Assembly & Installation	9
Horizontal Vent Heat Shield Installation	10
Nailing Flange Assembly & Installation	10
FRAMING	
Wall Enclosure Rough Opening	11
Minimum Finished Opening Dimensions	11
Vertical Terminations	12
Horizontal Terminations	12
TYPICAL INSTALLATION OPTIONS	
Typical Installation Options	13
MANTEL REQUIREMENTS	
Mantel Requirements	14
GLASS FRAME ASSEMBLY	
Glass Frame Assembly Removal	14
Glass Frame Assembly Installation	14
FAN INSTALLATION	
TRF-028 (PR-36 only) Optional Fan Installation	15
GAS LINE CONNECTION	
Gas Line Connection	16
PR-36 THERMOSTAT / WALL SWITCH / REMOTE	
PR-36 Thermostat / Wall Switch / Remote	17
VENTING	
Approved Venting	18
Horizontal Vent System Clearances	18
Horizontal Termination Minimum / Maximum	18
#800-WPT Wall Pass-Thru Installation Instructions	19
Horizontal Min. / Max. Venting Illustrations	20
Vertical Vent System Clearances	21
Combustion Air Intake Settings	21
Horizontal / Vertical Combination Venting	21
Vertical Min. / Max. Venting Illustrations	22

VENTING (cont.)	
Restrictor Installation	22
Horizontal & Vertical Combination Venting Illustration	23
#800 Series Flex Vent Installation Instructions	24-25
Termination Vent Cap Location	26
Vent Termination Clearances	27
LOG SET INSTALLATION	
Log Set Installation	28
CONTROL BOARD	
Control Board Removal	29
Control Board Installation	30
GRILL SET	
Grill Set Installation	31
Grill Set Removal	31
PR-36 OPERATING INSTRUCTIONS	
PR-36 Valve and Pilot Assembly Components	32
PR-36 Lighting and Shutdown Instructions	33-35
PR-36 Pressure Testing	36
PR-36-IPI OPERATING INSTRUCTIONS	
PR-36-IPI Wiring Schematics	37
PR-36-IPI Valve and Pilot Assembly Components	38
PR-36-IPI Control Module Components	39
PR-36-IPI Remote Control Components	40
PR-36-IPI Information and Remote Control Operation	41-44
PR-36-IPI Lighting and Shutdown	45-46
PR-36-IPI Pressure Testing	47
PR-36-IPI Error Codes	48
FINALIZING THE INSTALLATION	
Burner Tube Adjustment / Troubleshooting	49
Restrictor Troubleshooting / Installation after Termination Completion	50
Heat Damper Operation	51
MAINTENANCE	
Maintenance	52
TROUBLESHOOTING	
PR-36 Troubleshooting	53-55
PR-36-IPI Troubleshooting	56-57
CONVERSION KIT INSTRUCTIONS	
Conversion Kit Instructions (PR-36)	58-59
Conversion Kit Instructions (PR-36-IPI)	60-61
REPLACEMENT PARTS LIST	
Replacement Parts List	62
WARRANTY	
Warranty	63-64

SAFETY INFORMATION

This fireplace has been tested to and complies with ANSI Z21.88a-2007·CSA 2.33a-2007·CSA P.4.1-02 "VENTED GAS FIREPLACE HEATERS" by OMNI-Test Laboratories, Beaverton, OR. Installation must conform with local building codes or in the absence of local building codes, with the National Fuel Gas Code, ANSIZ223.1/NFPA 54 - Current Edition, or the Natural or Propane Installation Code, CSAB149.1

- **Installation and repair should be done only by a qualified service person. The appliance should be inspected by a qualified service person before use. Annual inspection by a qualified service person is required to maintain warranty. More frequent cleaning may be required due to excessive lint from carpeting, bedding materials, etc. It is imperative that control compartments, burners and circulation air passageways of the appliance be kept clean.**
- **If this appliance is installed directly on carpeting, tile or other combustible material other than wood flooring, the appliance shall be installed on a metal or wood panel extending the full width and depth of the appliance.**
- **Children and adults should be alerted to the hazards of high surface temperatures and should stay away to avoid burns or clothing ignition.**
- **Young children should be carefully supervised when they are in the same room as the appliance. Toddlers, young children and others may be susceptible to accidental contact burns. A physical barrier is recommended if there are at risk individuals in the house. To restrict access to a fireplace or stove, install an adjustable safety gate to keep toddlers, young children and other at risk individuals out of the room and away from hot surfaces.**
- **Clothing or other flammable material should not be place on or near the appliance.**
- **Adequate accessibility clearances for servicing and proper operation must be maintained.**
- **This appliance must not share or be connected to a chimney flue serving any other appliance.**
- **Keep area around the appliance clear of combustible materials, gasoline and other flammable vapor and liquids.**
- **The flow of combustion and ventilation air must not be obstructed.**
- **Due to high temperatures the appliance should be located out of traffic and away from furniture and draperies.**
- **The glass front or any part removed for servicing the appliance must be replaced prior to operating the appliance. Work should be done by a qualified service technician.**
- **Clean glass only when cool and only with non-abrasive cleansers.**
- **Do not operate this appliance with the glass/frame assembly removed, cracked or broken. The glass assembly, Part #PRC-057T, shall only be replaced as a complete unit, as supplied by Hussong Mfg. Co., Inc. Replacement of the glass assembly must only be performed by a licensed or qualified service person. DO NOT SUBSTITUTE MATERIALS.**
- **Do not strike or slam glass assembly.**
- **Any safety screen or guard removed for servicing the appliance must be replaced prior to operating the appliance.**
- **Under no circumstances should any solid fuel (wood, coal, paper or cardboard etc.) be used in this appliance.**
- **Keep burner and control compartment clean.**
- **Do not use this fireplace if any part has been under water. Immediately call a qualified service technician to inspect this appliance and to replace any part of the control system and any gas control which has been under water.**

FEATURES

STANDARD FEATURES

- High efficiency
- High quality lifetime glass
  23-3/4" x 30-1/4" (603 mm x 768 mm)
- Quick latch glass frame assembly
- Upper grill / hood & lower grill (black)
- Accepts rigid pipe or Kozy Heat flexible vent system
- High - Low regulator
- Patented log design
- Automatic fan kit (2) - 75 CFM*
- Refractory brick lining (sandstone)
- Combustible material backer board
- Minnesota Energy Code compliant to 50 pascals

*Standard PRC-36-IPI models
**Standard PRC-36 models

SAFETY FEATURES

- **Each unit factory tested!**
- Tested by OMNI - Test Laboratories
- Sealed combustion chamber
- Standing pilot ignition**
- Intermittent or Standing pilot ignition*
- 30-second delay pilot**
- Flame sensing system (safety shutoff)*
- Automatic pressure relief glass system
- Requires no electricity to operate
  (excluding fan & light kit)
- Bedroom and mobile home approved
- Canadian approved

*Standard on PRC-36-IPI models
**Standard on PRC-36 models

OPTIONAL FEATURES

- Brick refractory in various colors and styles
- Light Kit
- Automatic fan kit* with variable speed control ((2) 75 CFM)
- Remote control* or thermostat remote control
- Wall mount thermostat / wireless wall mount thermostat
- Decorative full door faces in various styles and finishes
- Mission design doors in various finishes
- Various cabinet & flush surrounds

*Standard on PRC-36-IPI models
**Standard on PRC-36 models

WEIGHT

- Fireplace Weight (as packaged for shipment)
  183 lbs. (83.01 kg)

COMMONWEALTH OF MASSACHUSETTS REQUIREMENTS

NOTE: The following requirements reference various Massachusetts and national codes not contained in this manual.

For all sidewall horizontally vented gas fueled equipment installed in every dwelling, building or structure used in whole or in part for residential purposes, including those owned or operated by the Commonwealth and where the side wall exhaust vent termination is less than (7) feet above finished grade in the area of the venting, including but not limited to decks and porches, the following requirements shall be satisfied:

INSTALLATION OF CARBON MONOXIDE DETECTORS

At time of installation of side wall horizontally vented gas fueled equipment, the installing plumber or gas-fitter shall observe that a hard wired carbon monoxide detector with an alarm and battery back-up is installed on the floor level where the gas equipment is to be installed. In addition, the installing plumber or gas-fitter shall observe that a battery operated or hard wired carbon monoxide detector is installed on each additional level of the dwelling, building or structure served by the side wall horizontal vented gas fueled equipment. It shall be the responsibility of the property owner to secure the services of qualified licensed professionals for the installation of hard wired carbon monoxide detectors.

In the event that the side wall horizontally vented gas fueled equipment is installed in a crawl space or attic, the hard wired carbon monoxide detector with alarm and battery back-up may be installed on the next adjacent floor level.

In the event that the requirements of this subdivision can not be met at the time of completion of installation, the owner shall have a period of thirty (30) days to comply with the above requirements; provided, however, that during said thirty (30) day period, a battery operated carbon monoxide detector with an alarm shall be installed.

APPROVED CARBON MONOXIDE DETECTORS

Each carbon monoxide detector as required in accordance with the above provisions shall comply with NFPA 720 and be ANSI/UL 2034 listed and IAS certified.

SIGNAGE

A metal or plastic identification plate shall be permanently mounted to the exterior of the building at a minimum of eight (8) feet above grade directly in line with the exhaust vent terminal for the horizontally vented gas fueled heating appliance or equipment. The sign shall read, in print no less the one-half inch (1/2) in size, **"GAS VENT DIRECTLY BELOW. KEEP CLEAR OF ALL OBSTRUCTIONS".**

INSPECTION

The state or local gas inspector of the side wall horizontally vented gas fueled equipment shall not approve the installation unless, upon inspection, the inspector observes carbon monoxide detectors and signage installed in accordance with the provisions of 248 CMR 5.08 (2) (a) 1 through 4.

EXEMPTIONS

The following equipment is exempt from 248 CMR 5.08 (2) (a) 1 through 4:The equipment listed in Chapter 10 entitled "Equipment Not Required To Be Vented" in the most current edition of NFPA 54 as adopted by the Board; and Product Approved side wall horizontally vented gas fueled equipment installed in a room or structure separate from the dwelling, building or structure used in whole or in part for residential purposes.

MANUFACTURER REQUIREMENTS - GAS EQUIPMENT VENTING SYSTEM PROVIDED

When the manufacturer of Product Approved side wall horizontally vented gas equipment provides a venting system design or venting system components with the equipment, the instructions provided by the manufacturer for installation of the equipment and the venting system shall include:

Detailed instructions for the installation of the venting system design or the venting system components; and

A complete parts list for the venting system design or venting system.

MANUFACTURER REQUIREMENTS - GAS EQUIPMENT VENTING SYSTEM NOT PROVIDED

When the manufacturer of Product Approved side wall horizontally vented gas equipment does not provide the parts for venting the flue gases, but identifies "special venting systems", the following requirements shall be satisfied by the manufacturer:

The referenced "special venting systems" instructions shall be included with the appliance or equipment installation instructions and;

The "special venting systems" shall be Product Approved by the Board, and the instructions for that system shall include a parts list and detailed installation instructions.

A copy of all installation instructions for all Product Approved side wall horizontally vented gas fueled equipment, all venting instructions, all parts lists for venting instructions, and/or all venting design instructions shall remain with the appliance or equipment at the completion of the installation.

SPECIFICATIONS

FIREPLACE DIMENSIONS

	LETTER KEY	A	B	C	D	E	F	G	H	I	J
	DESCRIPTION	Height	Width	Back Width	Depth	Opening Width	Glass Frame Height	Stand-off Height	Front to Vent Center (Vert. Term.)	Floor to Vent Center (Hor. Term.)	Front to Angled Back
FIREPLACE DIMENSIONS	INCHES	32	35-7/8	24-5/8	21-3/8	31-3/8	24-3/8	10	18-1/8"	30-1/8	10-1/4
	MILLIMETERS	813	911	625	543	797	619	254	460	765	260

WARNING: Top stand-off bracket must be attached to fireplace. Do not remove. Stand-off brackets are not load bearing. Non-combustible zone: Stand-offs provide 10" (254mm) minimum clearance to header. Use only non-combustible material in this area for entire width of fireplace. Do not use wood, sheetrock etc. in this zone. Other clearances apply. All clearances must be maintained.

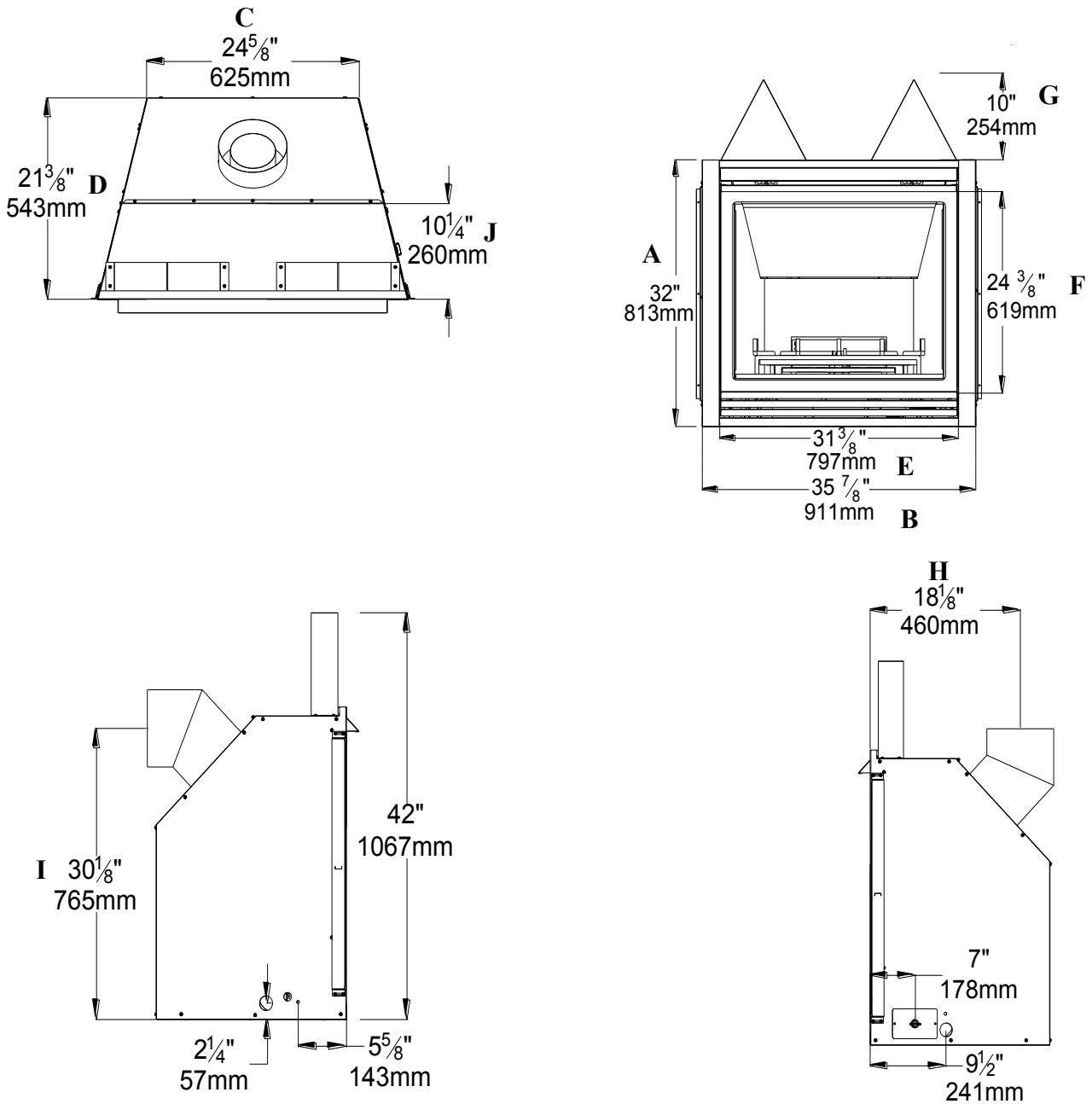

Figure 6a

SPECIFICATIONS

WARNING: Top stand-off bracket must be attached to fireplace. Do not remove. Stand-off bracket is not load bearing. Non-combustible zone: Stand-offs provide 10" (254mm) minimum clearance to header. Use only non-combustible material in this area for entire width of fireplace. Do not use wood, sheetrock etc. in this zone. Other clearances apply. All clearances must be maintained.

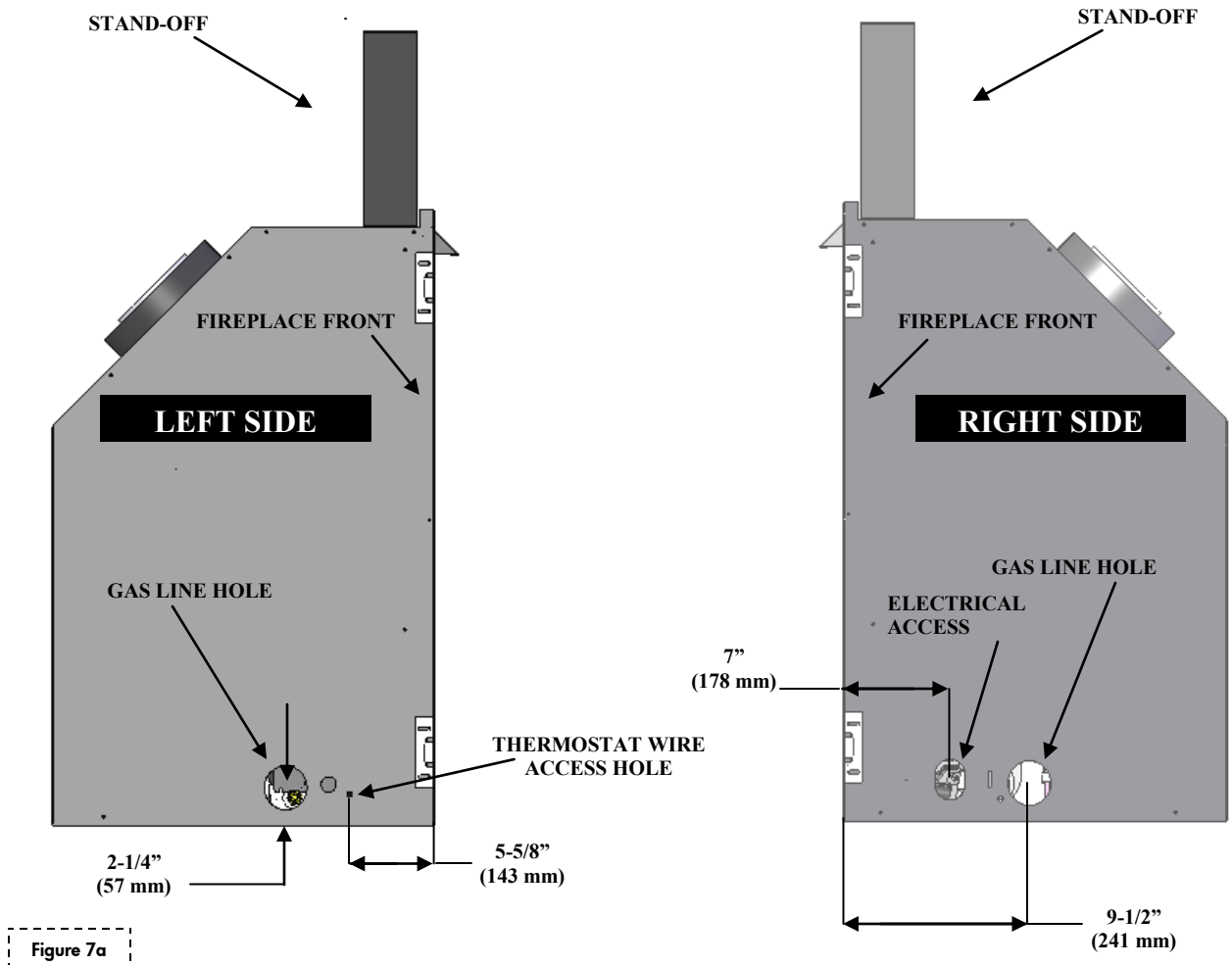

Figure 7a

CLEARANCES	
Top of unit face to header	10" (254 mm)
From unit left & right sides and back	1/2" (13 mm)
From surround sides (flush)	1/4" (6mm)
To flooring	0" (0 mm)
Unit top to ceiling	31" (787mm)
Unit side to adjacent sidewall	10" (254 mm)
Mantel 10" (254 mm) deep from top of fireplace	15" (381 mm)

SPECIFICATIONS

#PR-36 COMPONENTS LIST

PART NUMBER	DESCRIPTION
PRC-770	Millivolt Control Board Assembly
700-203	Manual Gas Shut-off Valve
PRC-135	Burner Assembly
PRC-H900	Refractory set
PRC-500	Log Package
PRC-057T	Glass Frame Assembly
OCK-S5271A	LP Conversion Kit
600-083	Receptacle / Speed Control Assembly
942-085	5” Restrictor Plate
500-PRC	3 pc. Grill Assembly

#PR-36-IPI COMPONENTS LIST

PART NUMBER	DESCRIPTION
PRC-600-IPI	IPI Control Board Assembly
700-203	Manual Gas Shut-off Valve
PRC-135	Burner Assembly
PRC-H900	Refractory Set
PRC-500	Log Package
PRC-057T	Glass Frame Assembly
OCK-A5271L-I-PRC-PSE	LP Conversion Kit
600-002	Double Receptacle Assembly
942-085	5” Restrictor Plate
500-PRC	3 pc. Grill Assembly
IPI-028	IPI Fan Kit
700-208	Remote Control

INSTALLATION OVERVIEW

NOTE: The qualified installer should follow the procedure best suited for the installation.

1. Frame an opening for the fireplace, allowing for vent installation (top or rear) and type of installation (corner or flat wall application).
2. If masonry (optional) is used, prepare foundation for the masonry load. A lintel is required to support the added weight above fireplace.
3. Attach nailing flanges to fireplace.
4. Insert fireplace into framing.
5. Install hearth (if applicable).
6. Complete gas line installation.
7. Complete electrical hook-up. Install any standard or optional electrical components at this time.
8. Complete venting installation.
9. Secure fireplace to flooring through holes in outer box bottom and to framing with nailing flanges. Verify all clearances at this point.
10. Install facing material, mantel or cabinetry, allowing room for optional full face doors, if applicable.
11. Install logs.
12. Install grills and optional decorative doors / faces.
13. Verify proper operation of fireplace and all components.

PLACEMENT CLEARANCE REQUIREMENTS

- This fireplace must be installed on a level surface capable of supporting the fireplace and venting.
- Fireplace must be placed directly on wood or non-combustible surface (not linoleum or carpet) extending entire depth and width of fireplace.
- Due to high surface temperatures, fireplace should be located out of traffic and away from furniture and draperies.
- This fireplace may be installed in a bedroom.
- Please be aware of the large amount of heat this fireplace will produce when determining a location.

PREPARE THE FIREPLACE

STAND-OFF ASSEMBLY & INSTALLATION

WARNING: Top stand-off bracket must be attached to fireplace. Do not remove. Stand-off bracket is not load bearing. Non-combustible zone: Stand-offs provide 10" (254mm) minimum clearance to header. Use only non-combustible material in this area for entire width of fireplace. Do not use wood, sheetrock etc. in this zone. Other clearances apply. All clearances must be maintained.

The top stand-off brackets are attached to fireplace top in a flat state for shipping.

1. Remove and save (4) screws securing stand-off heat shield and stand-off brackets, and (4) screws located under stand-off brackets.
2. Form each stand-off bracket as shown.
3. Re-attach stand-off brackets to fireplace using screws previously removed.

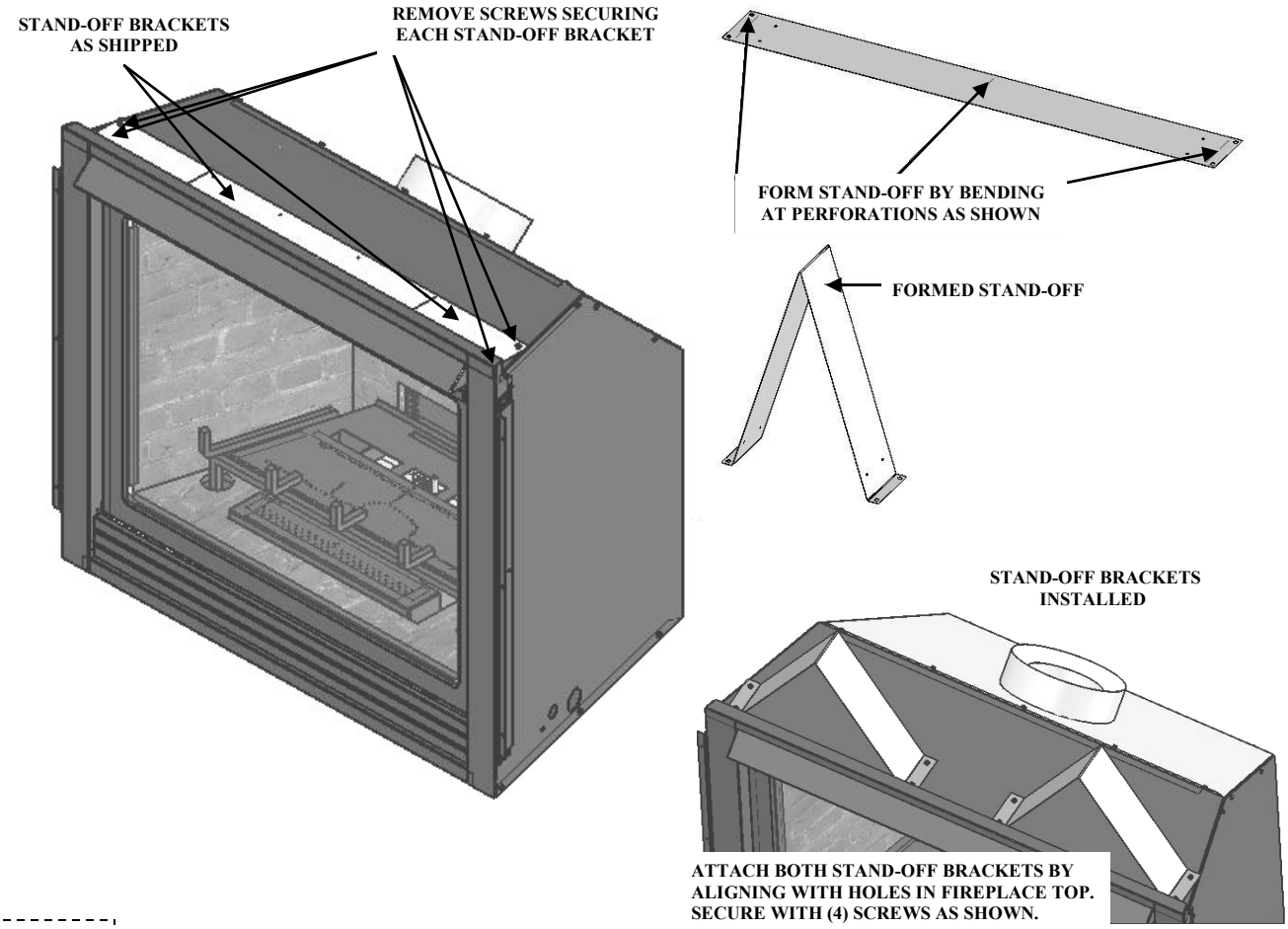

Figure 9a

PREPARE THE FIREPLACE

HORIZONTAL VENT HEAT SHIELD INSTALLATION

IMPORTANT: The horizontal vent heat shield must be installed when using a 45-degree elbow to horizontally position the vent system.
EXCEPTION: Corner installations

1. Loosen, but do not remove center three screws at back of fireplace as shown.

2. Bend horizontal heat shield at perforation to a 45° angle. Slide (3) slots on horizontal vent heat shield under loosened screws. Re-tighten screws.

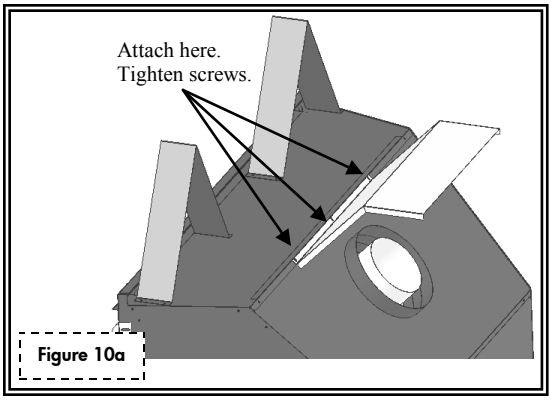

Figure 10a

NAILING FLANGE ASSEMBLY & INSTALLATION

1. Remove (4) nailing flanges from fireplace sides.

2. With the 1/4" (6 mm) stand-offs on nailing flanges facing away from fireplace, align nailing flange with holes on outside corners of fireplace. Secure with screws (provided in components packet) through slots in nailing flanges.

3. Bend perforation on nailing flange until parallel with fireplace face. Do not bend toward fireplace face.

4. Position framing stud against 1/4" (6 mm) stand-off (located on backside of nailing flange). Secure with nails or screws.

NOTE: Depending on facing material, tabs can be adjusted forward or back up to 1/2" (13 mm).

CAUTION: NEVER PERMANENTLY REMOVE THESE ASSEMBLIES FROM FIREPLACE - THEY MUST BE SECURED IN PLACE REGARDLESS OF FINISH MATERIAL USED.

When installed, nailing flanges provide the minimum 1/4" (6 mm) clearance from fireplace sides.

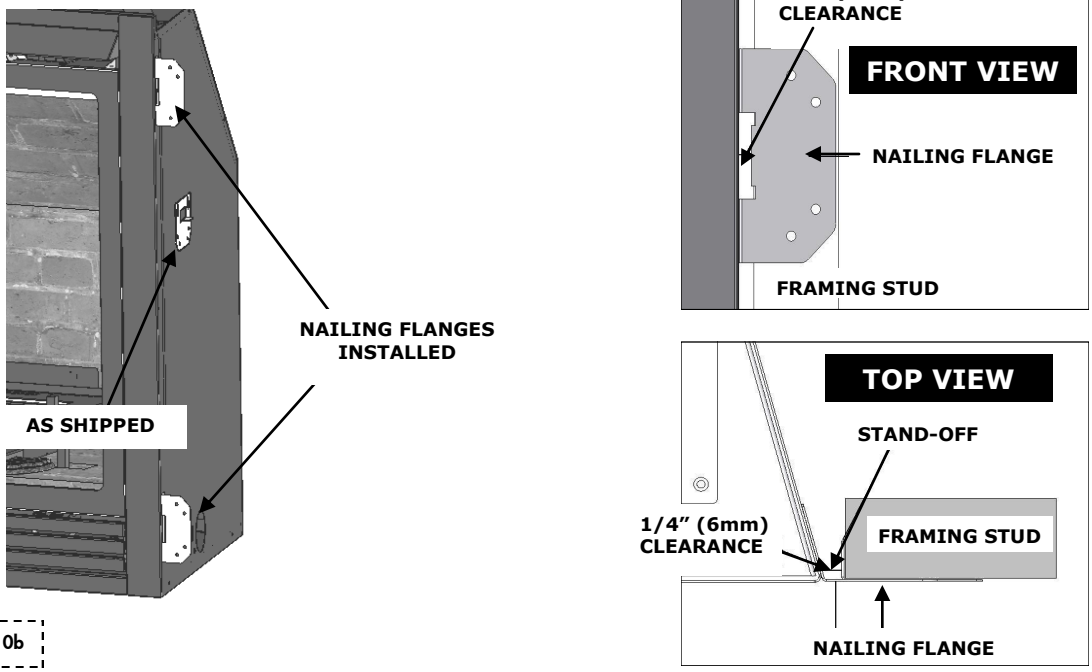

Figure 10b

FRAMING

WALL ENCLOSURE ROUGH OPENING

IMPORTANT: Framing dimensions should allow for wall covering thickness and fireplace facing materials. If using a hearth, adjust rough opening size as necessary to maintain at least minimum clearance requirements.

IMPORTANT: Non-combustible facing material may be applied over (but not directly to) fireplace face. This will prevent facing material from falling off due to heat expansion. Do not obstruct the flow of ventilation air.

MINIMUM FINISHED OPENING DIMENSIONS

HORIZONTAL VENTING

42"(1067 mm) High x 36-3/8"(924 mm) Wide x 21-7/8" (556 mm) Deep.
1/2" (13 mm) clearance at back and sides of fireplace must be maintained.

VERTICAL VENTING

42"(1067 mm) High x 36-3/8"(924 mm) Wide x 23-7/8" (607 mm) Deep.
2-1/2" (64 mm) clearance at back to maintain vent system clearance and 1/2" (13 mm) at sides of fireplace must be maintained.

NOTE: Provide adequate clearance in front of fireplace to operate lower grill, open and close optional decorative doors / full door faces, access components, installation of gas line, fan, etc.

WARNING: Do not obstruct upper and lower grill openings. Room air enters through lower passage, is heated and exits through upper passage. Blocking these passages may result is overheating, creating a potentially hazardous situation.

✻ **Illustration below requires a minimum 5" (127 mm) exterior wall depth when using minimum horizontal venting. Anything less than a 5" (127 mm) exterior wall depth requires that you add that depth to the 21-7/8" (556 mm) dimension to accommodate minimum venting.**

5" (127 mm) exterior wall depth shown*

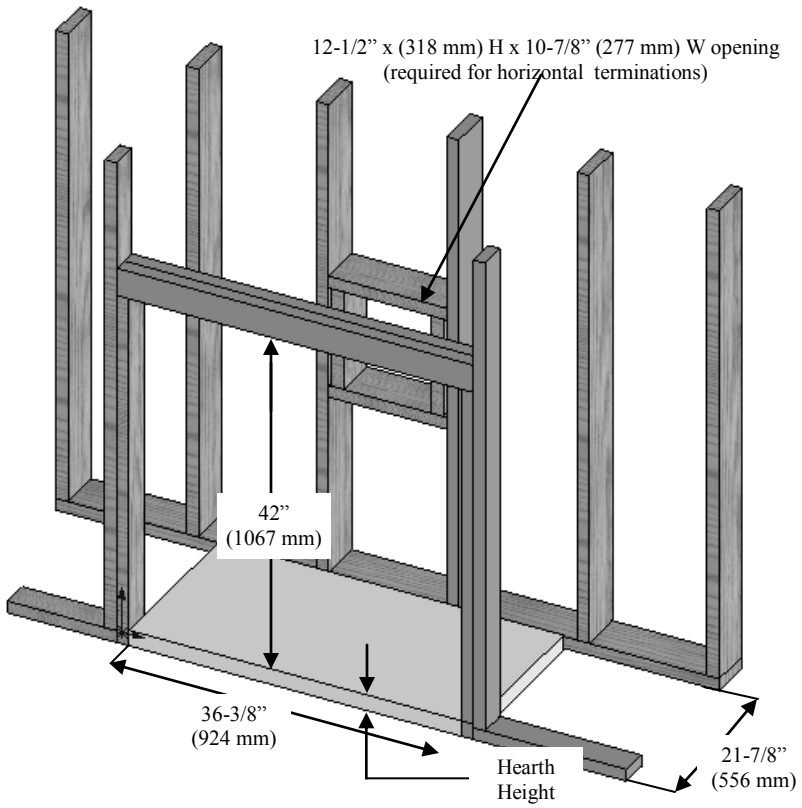

Figure 11a

FRAMING

Determine exact position of your fireplace, including hearth height, width, and depth, (if applicable). If possible, place fireplace in such a manner that vent termination will be placed between two studs, eliminating the need for additional framing.

If masonry is to be used (optional), prepare the necessary foundation for the masonry load. When masonry construction is being used, a lintel must be used over the top of fireplace to support the added weight.

HEARTH EXTENSION REQUIREMENTS

NOTE: Consider height of hearth finish material (stone, brick, etc.) when building fireplace platform. Bottom of fireplace must be level with finished hearth to allow for lower grill operation and proper fit of optional decorative full door faces.

WARNING: Install fireplace on hard metal or wood surface extending the full width and depth of fireplace. Minimum platform size: 35-7/8" (911 mm) wide x 21-3/8" (543mm) deep.

FIRE HAZARD: Do NOT install directly on carpeting, vinyl, or any combustible material other than wood.

Non-combustible material 36" (914 mm) wide x 14" (357 mm) deep required in front of fireplace when fireplace is raised less than 2 inches. If hearth is to be made of combustible material it must have a minimum height of 2" (51 mm) and a maximum depth of 6" (152 mm).

VERTICAL TERMINATIONS

Follow vent pipe manufacturer's installation instructions for vertical terminations.
A minimum 1" (25 mm) clearance on all sides of vertical vent pipe must be maintained.

HORIZONTAL TERMINATIONS

Follow vent pipe manufacturer's installation instructions for horizontal terminations. Include required 3" (76mm) top clearance and 1" (25mm) sides and bottom clearances for approved rigid vent systems and Kozy Heat #800 series flexible vent system.

NOTE: The included Horizontal Vent Heat Shield is not used for vertical configurations.

IMPORTANT: Vent cap location must be in compliance with guidelines on page 26 of this manual.

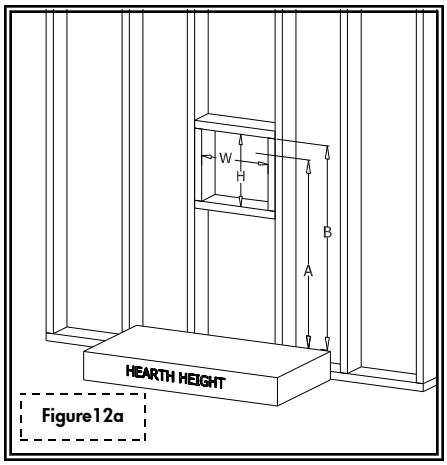

Figure12a

MINIMUM HORIZONTAL FRAMING DIMENSIONS		
	VENT PIPE TOP (A)	FRAMED OPENING TOP (B)
RIGID PIPE OPTION #1 (see pages 18 & 20)	34-3/8" (873 mm)	37-3/8" (950 mm)
RIGID PIPE OPTION #2 (see pages 18 & 20)	37-1/2" (953 mm)	40-1/2" (1029 mm)
RIGID PIPE CORNER INSTALLATION	45" (1143 mm)	48" (1219 mm)
FLEX PIPE	37-3/8" (950 mm)	40-7/8" (1038 mm)

CAUTION: Cold air transfer area. The surrounding fireplace chase must comply with all clearances as outlined in this manual and be constructed in compliance with local building codes. Outside walls should be insulated to prevent cold air from entering room.

CAUTION: Due to high temperatures, this fireplace should be located out of traffic areas and away from furniture and draperies.

TYPICAL INSTALLATION OPTIONS

IMPORTANT: Kozy Heat wall thimble pass-thru (#800-WPT or #800WPT2) must be used on all horizontal vent runs. Follow instructions on page 19 of this manual.

IMPORTANT: The horizontal heat shield included with this fireplace must be installed when using a 45-degree elbow directly off top of unit to horizontally position vent system. EXCEPTION: Corner installations.

NOTE: HORIZONTAL VENT HEAT SHIELD NOT SHOWN FOR CLARITY PURPOSES ONLY.

✻ **Illustration at right requires a minimum 5" (127 mm) exterior wall depth when using minimum horizontal venting. Anything less than a 5" (127 mm) exterior wall depth requires that you add that depth to the 21-7/8" (556 mm) dimension to accommodate minimum venting.**

TYPICAL HORIZONTAL INSTALLATION

5" (127 mm) exterior wall depth shown*

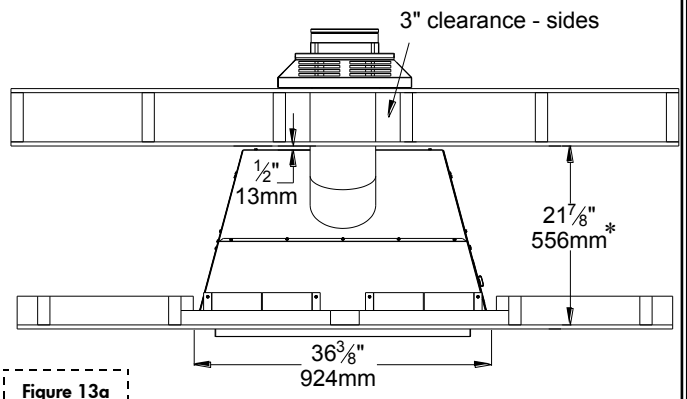

Figure 13a

TYPICAL CORNER INSTALLATION

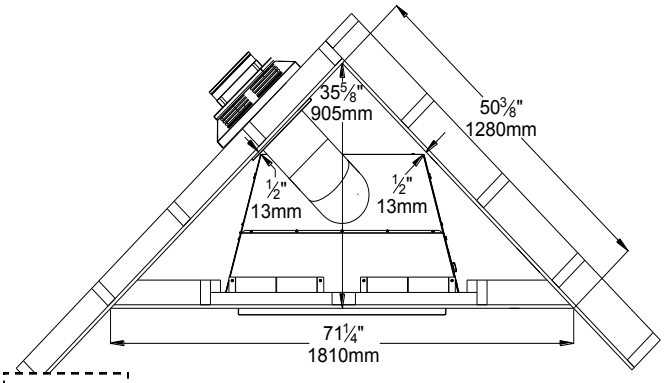

Figure 13b

TYPICAL VERTICAL INSTALLATION

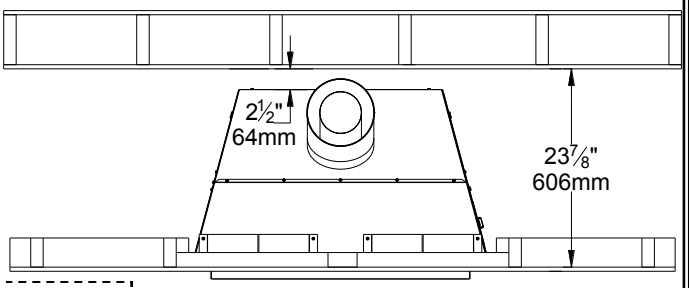

Figure 13c

MANTEL REQUIREMENTS

WARNING: TOP STAND-OFF BRACKETS MUST BE ASSEMBLED AND ATTACHED TO FIREPLACE. DO NOT REMOVE. STAND-OFF BRACKETS ARE NOT LOAD BEARING.

NON-COMBUSTIBLE ZONE:

Rigid pipe: 1-1/2" (38 mm) above elbow for entire width and depth (behind header) of fireplace.

#800 series flexible venting: 1" (25 mm) above elbow for entire width and depth (behind header) of fireplace.

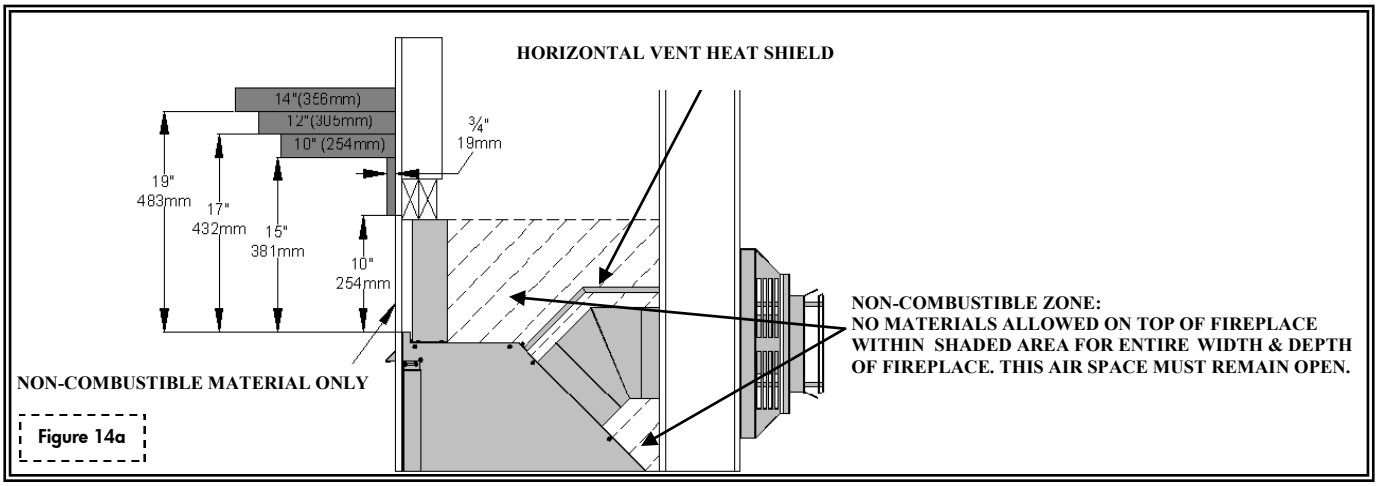

Figure 14a

GLASS FRAME ASSEMBLY

CAUTION: TO PREVENT GLASS FRAME ASSEMBLY FROM FALLING FROM FIREPLACE AND BECOMING DAMAGED, FOLLOW THESE INSTRUCTIONS EXACTLY WHEN REMOVING AND INSTALLING GLASS FRAME ASSEMBLY.

REMOVE GLASS FRAME ASSEMBLY

1. Locate spring-loaded handles securing glass frame assembly at top & bottom of firebox.
2. Pull bottom handles out and 'down' to release glass frame assembly bottom.
3. Pull top handles out and 'up' to release glass frame assembly top.

INSTALL GLASS FRAME ASSEMBLY

1. Place glass frame assembly onto fireplace front.
2. Pull top handles out and 'down' to secure glass frame assembly top.
3. Pull bottom handles out and 'up' to secure glass frame assembly bottom.

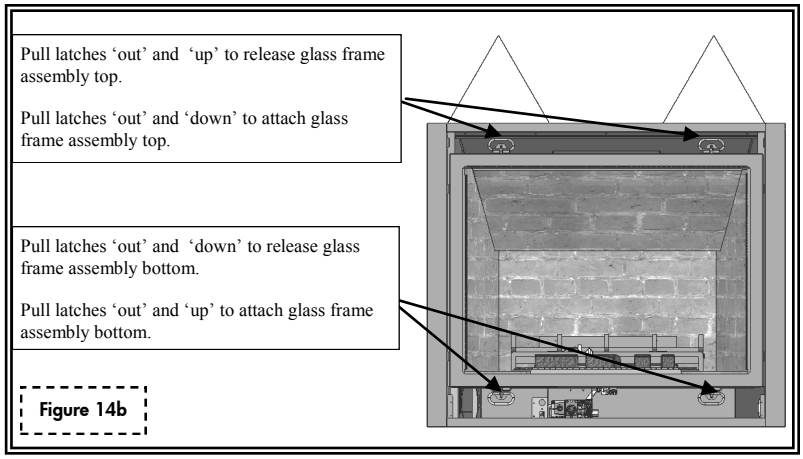

Figure 14b

OPTIONAL FAN INSTALLATION (PR-36 only)

INSTALLATION OF THIS FAN SHOULD BE DONE ONLY BY A QUALIFIED INSTALLER

WARNING: MAKE SURE HOUSEHOLD BREAKER IS SHUT OFF PRIOR TO WORKING ON ANY ELECTRICAL LINES.

WARNING: THIS APPLIANCE IS EQUIPPED WITH A THREE-PRONG (GROUNDING) PLUG FOR PROTECTION AGAINST SHOCK HAZARD AND SHOULD BE PLUGGED DIRECTLY INTO A PROPERLY GROUNDED THREE-PRONG RECEPTACLE. DO NOT CUT OR REMOVE GROUNDING PRONG FROM THIS PLUG.

IMPORTANT: If installing a fan, it is easier to complete prior to connecting millivolt board to gas supply. Wiring must be done before enclosing fireplace sides. An electrical box and romex connector are pre-installed on a removable panel on right side of fireplace. A receptacle / speed control assembly and (3) wire nuts are included in fireplace components packet.

NOTE: Code approved line voltage wiring 14 gauge or better must be used when wiring this assembly. Refer local electrical codes for specific requirements.

NOTE: This appliance must be electrically grounded and connected in accordance with local codes, or in the absence of local codes, with the National Electrical Code, ANSI/NFPA 70 Current Edition, or the Canadian electrical Code CSA C22.1.

NOTE: This fan will not operate unless speed control has been turned 'ON' and sufficient heat has been applied to temperature control switch. The fan will turn 'ON' and 'OFF' automatically as fireplace heats and cools. Adjust fan to desired speed while it is running.

Optional fan kit #TRF-028 includes: (2) 75 CFM fan with temperature control switch and 4 ft. (1219 mm) fan cord
(4) 1/4" nuts

1. Remove upper hood, upper louver & lower grill, if installed. Page 31.
2. Remove glass assembly. Page 14.
3. Insert fans through lower grill opening on left side of gas valve. Push to back of fireplace. Align mounting slots in fan brackets with mounting studs. Secure with nuts.
4. From inside lower right grill opening, loosen screw securing removable access panel (with electrical box & romex connector installed). Remove panel.
5. Insert 115V wiring (with ground) through romex connector and wire to speed control / receptacle assembly matching black (hot), white (neutral), and green (ground) wires to corresponding wires on speed control / receptacle assembly.
6. Secure speed control / receptacle assembly to electrical box with (2) screws provided.
7. Re-install electrical access panel. Tighten screw.
8. Attach temperature control switch to bottom of firebox.
9. Plug cord into electrical box receptacle.
10. Turn speed control counter-clockwise until it 'clicks'. This is the 'OFF' position.
11. Turn speed control 'ON' by turning knob clockwise past the 'click' - this is the highest setting.
12. Re-install glass assembly, lower grill, upper louver & upper hood.

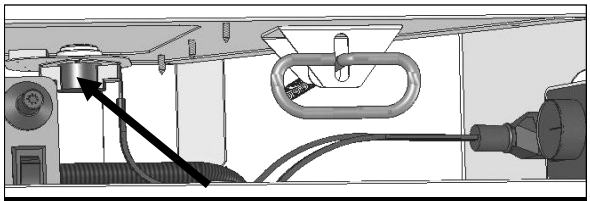

TEMPERATURE CONTROL SWITCH POSITION

Before adjusting temperature control switch, unplug 3-prong plug on fan cord from receptacle. Adjust position of temperature control switch to a warmer location under firebox to turn fan 'ON' sooner or move it to a cooler location under firebox to turn fan 'ON' later. The fan will turn on when sensor in temperature control switch reaches 110° F and will turn 'OFF' when sensor reaches 90° F. After adjustment, plug 3-prong plug on fan cord into receptacle.

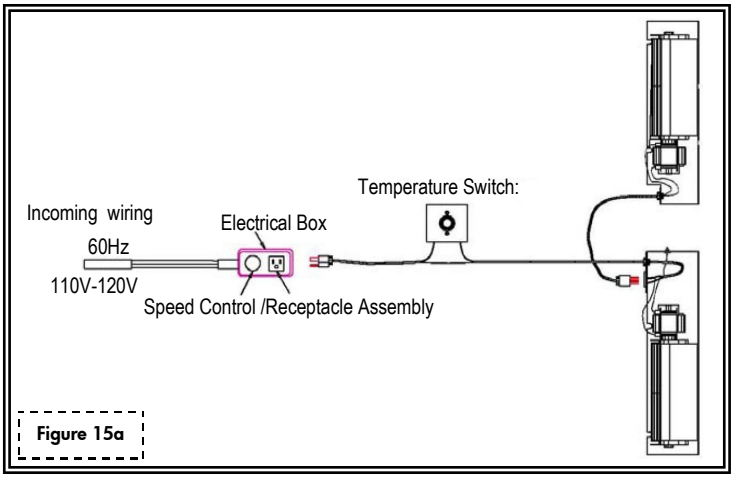

Figure 15a

GAS LINE CONNECTION

GAS CONVERSION

This fireplace is manufactured for use with Natural Gas. An LP conversion kit, is included with this fireplace. Follow instructions included with conversion kit if converting to LP gas.

ATTENTION: The conversion shall be carried out in accordance with the requirements of the provincial authorities having jurisdiction and in accordance with the requirements of the ANSI Z223.1 installation code.

CAUTION: Installation of the gas line must only be done by a qualified person in accordance with local building codes, if any. If not, follow ANSI 223.1.

Commonwealth of Massachusetts: Installation must be done by a licensed plumber of gas fitter.

NOTE: A listed (and Commonwealth of Massachusetts approved) 12" (13 mm) T- handle manual shut-off valve and flexible gas connector (included) are connected to the 1/2" (13 mm) control valve inlet. If substituting for these components, please consult local codes for compliance.

NOTE: This fireplace is equipped with a 3/8"(10 mm) x 18" (457 mm) long flexible gas connector and manual shut-off valve. The gas line should be run to the point of connection where the shut-off valve and flexible gas line will connect.

NOTE: The appliance and its individual shutoff valve must be disconnected from the gas supply piping system during any pressure testing of that system at pressures in excess of ½ psi.

NOTE: The appliance must be isolated from the gas supply piping system by closing its individual manual shut-off valve during any pressure testing of the gas line at test pressures equal to or less than ½ psi (3.5 kPa).

NOTE: For high altitude installations, consult the local gas distributor or the authority having jurisdiction for proper rating methods.

IMPORTANT: The efficiency rating of this appliance is a product of thermal efficiency rating determined under continuous operating conditions and was determined independently of any installed system.

	PR-36		PR-36-IPI	
	NATURAL GAS	LP GAS	NATURAL GAS	LP GAS
MINIMUM INLET GAS PRESSURE	5.0 inches W.C. (7.0 W.C. recommended)	11.0 inches W.C. (recommended)	5.0 inches W.C. (7.0 W.C. recommended)	11.0 inches W.C. (recommended)
MAXIMUM INLET GAS PRESSURE	10.5 inches W.C.	13.0 inches W.C.	10.5 inches W.C.	13.0 inches W.C.
MANIFOLD PRESSURE (HI)	3.5 inches W.C	10.0 inches W.C.	NA	NA
MANIFOLD PRESSURE (LO)	1.7 inches W.C.	6.3 inches W.C	NA	NA
ORIFICE SIZE	#37 & #55	#52 & #71	#37 & #55	#52 & #71
INPUT BTU/hr.	35,000	34,800	35,000	34,800
MINIMUM INPUT BTU/hr.	22,500	25,500	22,500	25,500

THERMOSTAT / WALL SWITCH / REMOTE (PR-36 only)

If desired, a thermostat (wireless style also available), wall switch, or remote control assembly may be used to turn fireplace 'OFF' and 'ON'. Only ONE of these may be installed. Follow instructions included with chosen assembly.

NOTE: INSTALLATION OF THERMOSTAT OR WALL SWITCH SHOULD ONLY BE DONE BY A QUALIFIED INSTALLER.

CAUTION: DO NOT CONNECT HIGH VOLTAGE (115V) WIRE TO GAS VALVE!

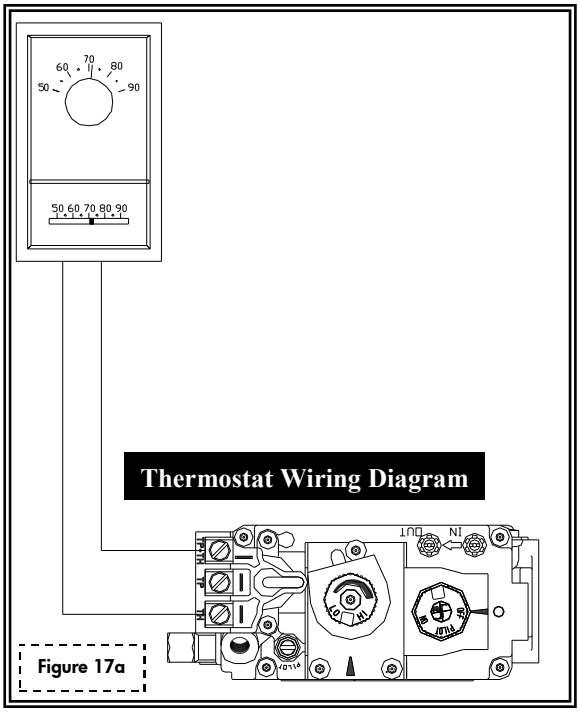

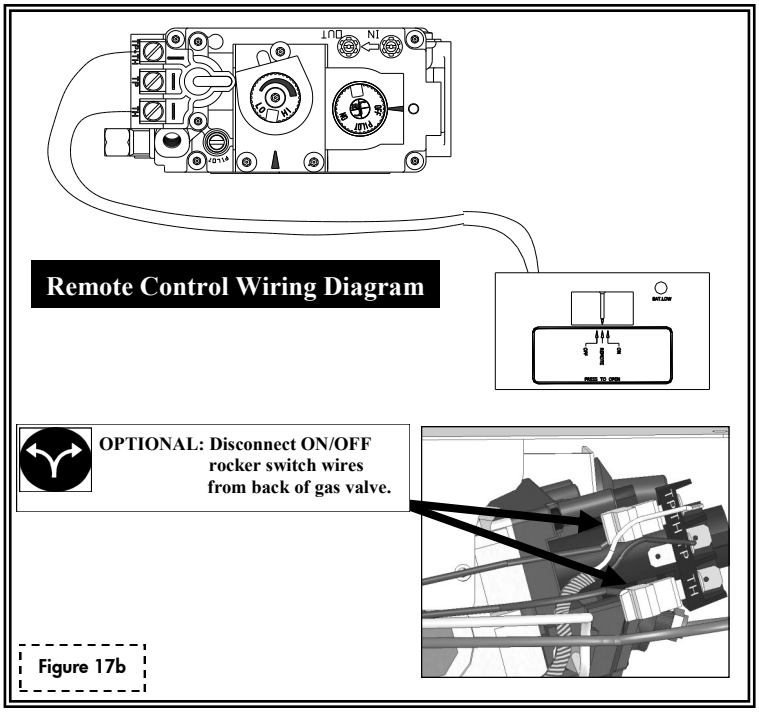

WALL SWITCH / THERMOSTAT:

Run low-voltage (thermostat) wires from terminals on gas valve to desired location of wall switch or thermostat.

Attach appropriate connectors to wall switch / thermostat wires and connect to top and bottom terminals marked TH/TPTH on gas valve.

REMOTE CONTROL:

Follow instructions included with remote control.

IMPORTANT: If ON/OFF rocker switch wires are <u>not disconnected</u>, the ON/OFF rocker switch on millivolt board must be in 'OFF' position for proper operation of any of these components.

IMPORTANT: If rocker switch is 'ON', fireplace burner will operate until it is turned 'OFF' by rocker switch. A wall switch, thermostat, or remote control will not turn fireplace 'OFF' when it has been turned 'ON' by the rocker switch. Fireplace must be turned 'ON' and 'OFF' by same method.
Example: If fireplace is turned 'ON' by remote control, it must be turned 'OFF' by remote control.

IMPORTANT: The insulated cover included with remote control must be placed over remote receiver to prevent overheating.

VENTING

IMPORTANT: Consult the local and national installation codes to assure adequate combustion and ventilation air is available.

IMPORTANT: Flame height and appearance will vary depending upon venting configuration and type of fuel used. Venting requirements apply to both Natural and LP gas.

Refer to the vent systems manufacturer's installation manual for complete installation instructions.
Installation must conform with the venting requirements and restrictions as outlined in this manual.

APPROVED VENTING

Simpson Dura-Vent DV-GS 5" x 8" direct vent system (horizontal and vertical terminations).

Ameri-Vent Direct Chimney System 5" x 8" (horizontal and vertical terminations).

Metal Fab Direct Chimney System 5" x 8" (horizontal and vertical terminations).

ICC Direct Chimney Systems 5" x 8" (horizontal and vertical terminations).

Selkirk-Metalbestos Chimney Systems 5" x 8" (horizontal and vertical terminations).

Kozy Heat #800 series flexible vent system (horizontal terminations).

HORIZONTAL VENT SYSTEM CLEARANCES

	TOP	BOTTOM	SIDES
ALL APPROVED VENTING	3 inches (76 mm)	1 inch (25 mm)	1 inch (25 mm)

VERTICAL VENT SYSTEM CLEARANCES

	TOP	BOTTOM	SIDES
ALL APPROVED VENTING	1 inch (25 mm)	1 inch (25 mm)	1 inch (25 mm)

HORIZONTAL TERMINATIONS

MINIMUM: 45° elbow + 6" (152 mm) horizontal + termination cap.

MAXIMUM: OPTION #1: 45° elbow + 5 ft. (1.52 mm) + termination cap.
OPTION #2: 6" + 45° elbow + 10 ft. (3.05 m) + termination cap.

IMPORTANT: The horizontal vent heat shield must be installed when using a 45-degree elbow to horizontally position the vent system. Exception: corner installations

Kozy Heat Wall Pass-thru, #800-WPT (4-1/2" (114 mm) - 6-1/2" (165 mm) wall thickness) or #800-WPT2 (6-1/2" (165 mm) - 12-1/2" (318 mm) wall thickness), must be used on all horizontal vent runs.

RESTRICTOR

A restrictor is included in fireplace components packet.

Each installation is unique and affected by various factors including venting configuration, altitude and climate. Therefore, after fireplace installation is complete a restrictor may be required or may need to be removed or modified.

Please refer to page 22 for installation instructions if installing restrictor in conjunction with venting.

Page 50 has information on restrictor recommendations depending on burner flame appearance and instructions on installation after venting is completed.

ELBOWS

For each additional 90° elbow used after first elbow, 3 ft. (914 mm) must be subtracted from maximum allowed venting. For each 45° elbow used, 1-1/2 ft. (457 mm) must be subtracted from maximum venting allowed.

NOTE: (2) 45° degree elbows may be used in place of (1) 90° elbow.

VENTING

#800-WPT WALL PASS-THRU

IMPORTANT: #800-WPT or #800-WPT2 WALL PASS-THRU MUST BE USED ON ALL HORIZONTAL VENT TERMINATIONS. THIS INCLUDES BOTH INTERIOR AND EXTERIOR WALLS. FOLLOW INSTRUCTIONS BELOW.

HORIZONTAL TERMINATIONS CLEARANCES

TOP: 3" (76 mm) SIDES & BOTTOM: 1" (25 mm)

FRAMING DIMENSIONS FOR #800-WPT KOZY HEAT WALL PASS-THRU

12-1/2" (318 mm) HIGH x 10-7/8" (276 mm) WIDE

WARNING: MAINTAIN ALL CLEARANCES AS STATED IN THIS INSTALLATION MANUAL.

IMPORTANT: If using Kozy Heat series flexible vent system, remove inner ring on each wall thimble section with a tin snips. This will provide adequate room for the flexible vent system.

A. Measure wall thickness; cut insulation panel (included) this length.

B. Install wall pass-thru section marked #1 (with 3/8" (10 mm) flange) into framed opening. Secure to interior wall with screws (not provided).

C. From the exterior, place insulation between flange and top of framed opening in wall pass-thru section #1.

D. Install section marked #2 of wall pass-thru into framed opening, overlapping metal sections as necessary to accommodate wall thickness. Secure to exterior wall with screws (not provided).

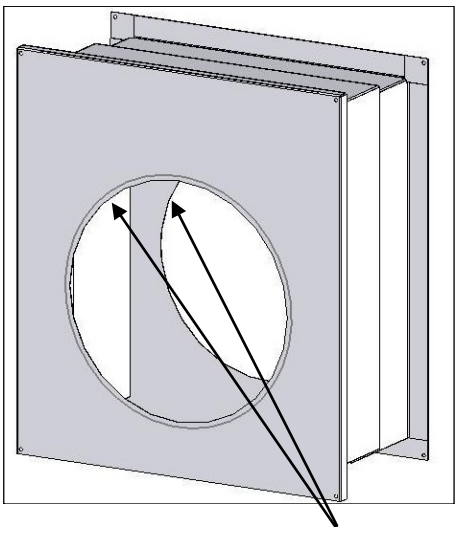

CUT RING OUT OF BOTH SECTIONS IF USING #800 SERIES FLEX VENTING.

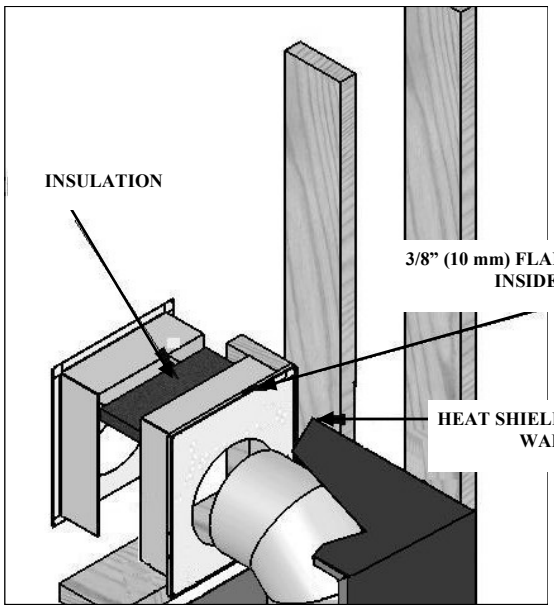

Figure 19a

VENTING

HORIZONTAL TERMINATIONS

NOTE: Horizontal sections require 1/4" (6 mm) rise for every 12" (305 mm) of travel.
NOTE: Page 22 has information on restrictor installation in conjunction with venting installation. Page 50 has information on restrictor recommendations depending on burner flame appearance and instructions on installation after venting is completed.

CAUTION: This gas appliance must not be connected to or joined with any other chimney flue serving another appliance.

IMPORTANT: The horizontal vent heat shield must be installed when using a 45-degree elbow to horizontally position the vent system. Exception: corner installations

Kozy Heat Wall Pass-thru, #800-WPT (4-1/2" (114 mm) - 6-1/2" (165 mm) wall thickness) or #800-WPT2 (6-1/2" (165 mm) - 12-1/2" (318 mm) wall thickness), must be used on all horizontal vent runs.

MINIMUM HORIZONTAL VENTING

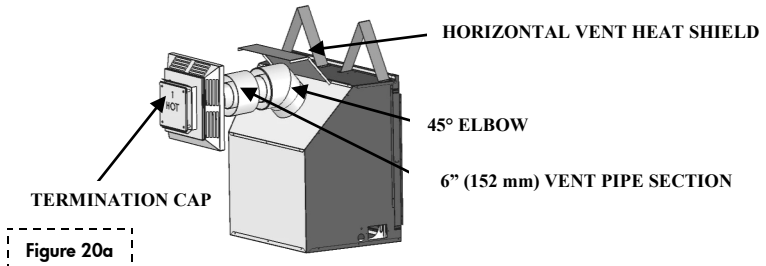

Figure 20a

MAXIMUM HORIZONTAL VENTING: OPTION #1

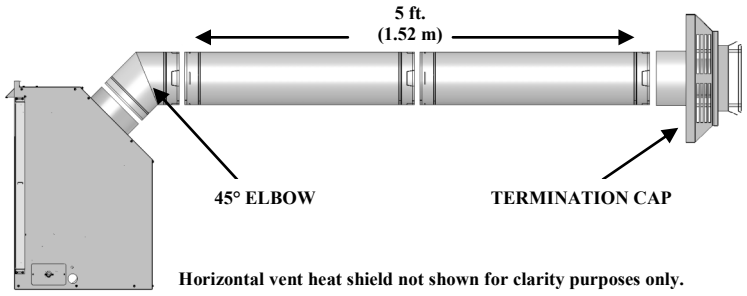

Horizontal vent heat shield not shown for clarity purposes only.

Figure 20b

MAXIMUM HORIZONTAL VENTING: OPTION #2

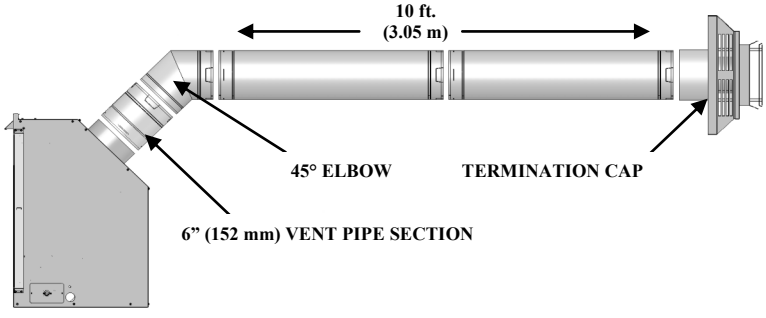

Figure 20c

TYPICAL CORNER INSTALLATION

Vent Opening Dimensions:
Refer to vent pipe manufacturer's instructions.

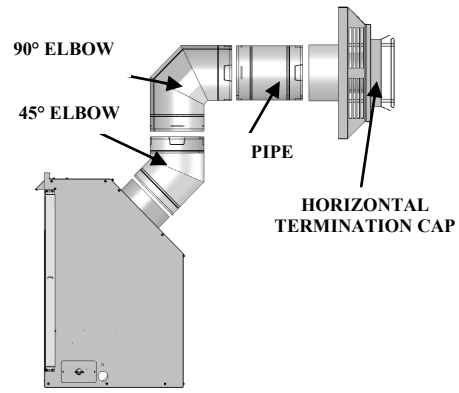

Figure 20d

VENTING

VERTICAL VENT SYSTEM CLEARANCES			
	TOP	**BOTTOM**	**SIDES**
ALL APPROVED RIGID PIPE	1 inch (25 mm)	1 inch (25 mm)	1 inch (25 mm)
KOZY HEAT #800 SERIES	DO NOT USE FOR VERTICAL TERMINATIONS		

VERTICAL TERMINATIONS

MINIMUM: 45˚ elbow + 2 ft. (610 mm) + termination cap.

MAXIMUM: 45˚ elbow + 30 ft. (9.14 m) + termination cap.

NOTE: VERTICAL TERMINATIONS ONLY: The combustions air intake shield (located against lower back wall of firebox interior) will require adjustment depending on venting height / configuration and type of fuel used. Use the chart below as a guideline when adjusting to achieve desired flame appearance.

COMBUSTION AIR INTAKE SETTINGS		
VERTICAL TERMINATION HEIGHT	**SETTING**	**GAS TYPE**
0 - 10 ft. (0 - 3.05 m)	**1**	**NAT**
11 - 20 ft. (3.35 m - 6.10 m)	**2**	**NAT**
21 - 30 ft. (6.40 m - 9.14 m)	**3**	**NAT**
25 - 30 ft. (7.62 m - 9.14 m)	**4**	**NAT**

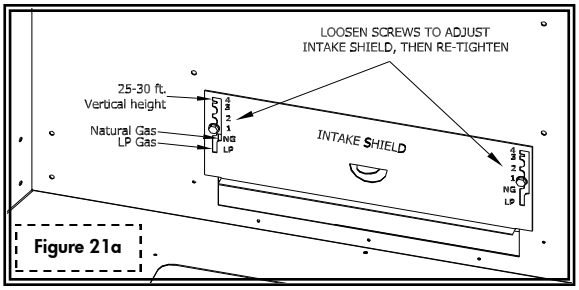

Figure 21a

RESTRICTOR

A restrictor is included in fireplace components packet.

Each installation is unique and affected by various factors including venting configuration, altitude and climate. Therefore, after fireplace installation is complete a restrictor may be required or may need to be removed or modified.

Please refer to page 22 for installation instructions if installing the restrictor in conjunction with venting.

Page 50 has information on restrictor recommendations depending on burner flame appearance and instructions on installation after venting is completed.

HORIZONTAL & VERTICAL COMBINATION TERMINATIONS

MAXIMUM: 10 ft. (3.05) horizontal + 15 ft. (4.57 m) vertical + cap. 25 ft (7.62m) total.

ELBOWS

For each additional 90° elbow used after first elbow, 3 ft. (914 mm) must be subtracted from maximum allowed venting. For each 45° elbow used, 1-1/2 ft. (457 mm) must be subtracted from maximum venting allowed.

NOTE: (2) 45° degree elbows may be used in place of (1) 90° elbow.

IMPORTANT: The horizontal vent heat shield must be installed when using a 45-degree elbow to horizontally position the vent system. Exception: corner installations

Kozy Heat Wall Pass-thru, #800-WPT (4-1/2" (114 mm) - 6-1/2" (165 mm) wall thickness) or #800-WPT2 (6-1/2" (165 mm) - 12-1/2" (318 mm) wall thickness), must be used on all horizontal vent runs.

VENTING

VERTICAL TERMINATIONS

CAUTION: This gas appliance must not be connected to or joined with any other chimney flue serving another appliance.

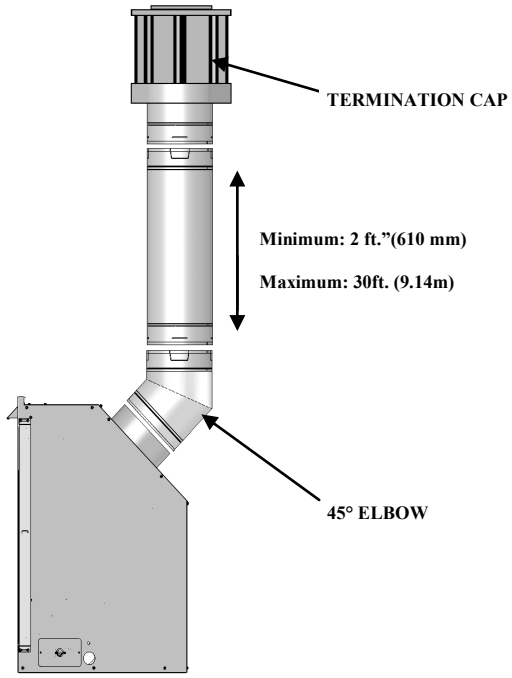

Figure 22a

RESTRICTOR INSTALLATION

TO BE USED AT INSTALLER DISCRETION.

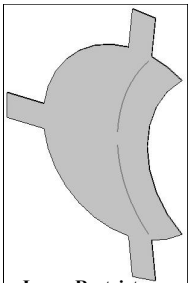

Large Restrictor

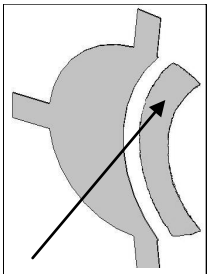

Remove tab (s) to create small restrictor

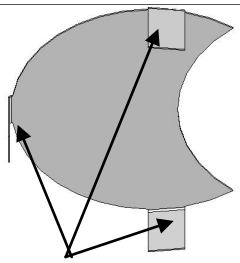

Bend tabs to approx. 80 degree angles to create tension to hold itself in place when installed.

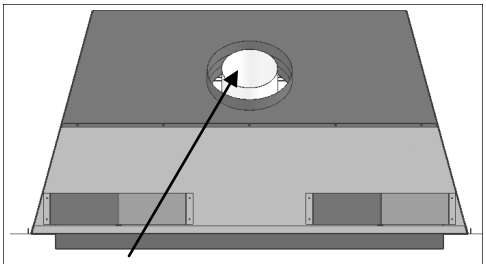

Slide restrictor into exhaust pipe on top of fireplace with tabs pointing towards you prior to attaching venting.

Figure 22b

NOTE: Page 50 has information on restrictor recommendations depending on burner flame appearance and instructions on installation after venting is completed.

VENTING

HORIZONTAL / VERTICAL COMBINATION

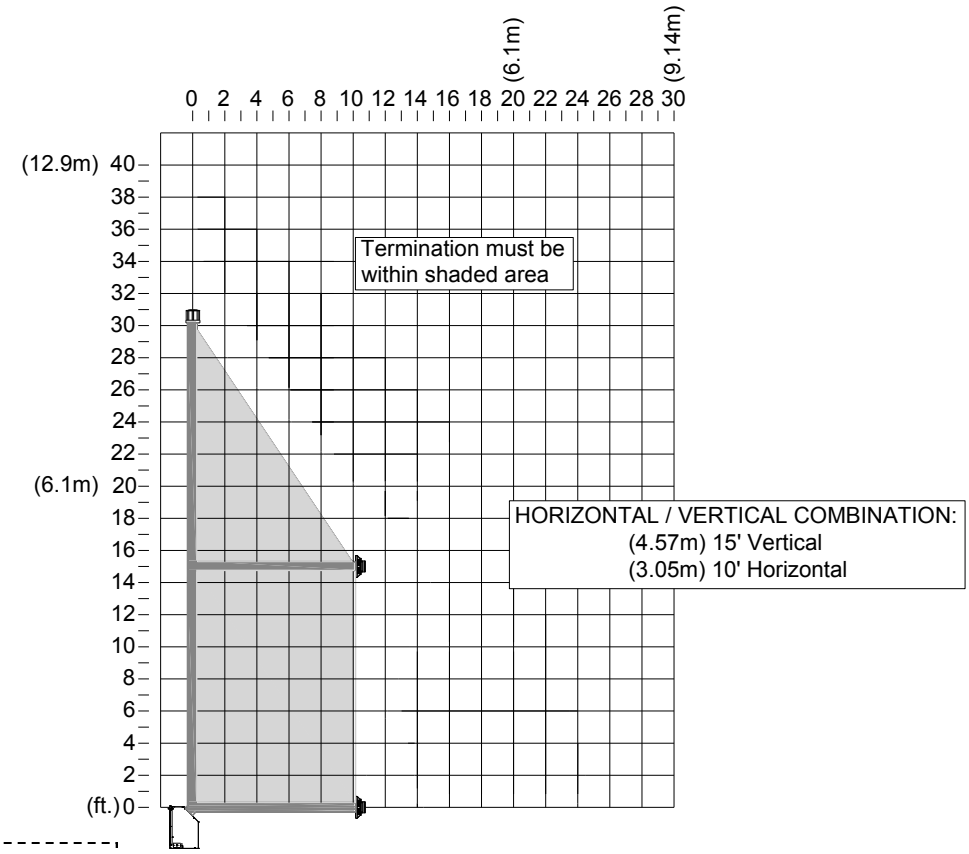

Figure 23a

CAUTION: This gas appliance must not be connected to or joined with any other chimney flue serving another appliance.

NOTE: Page 22 has information on restrictor installation in conjunction with venting installation.

Page 50 has information on restrictor recommendations depending on burner flame appearance and instructions on installation after venting is completed.

Horizontal sections require 1/4" (6 mm) rise for every 12" (305 mm) of travel.

For each additional elbow used after first elbow, 3 ft. (914 mm) must be subtracted from maximum venting allowed. For each 45° elbow used, 1-1/2 ft. (457 mm) must be subtracted from maximum venting allowed.

(2) 45° degree elbows may be used in place of (1) 90° elbow.

IMPORTANT: The horizontal vent heat shield must be installed when using a 45-degree elbow to horizontally position the vent system. Exception: corner installations

Kozy Heat Wall Pass-thru, #800-WPT (4-1/2" (114 mm) - 6-1/2" (165 mm) wall thickness) or #800-WPT2 (6-1/2" (165 mm) - 12-1/2" (318 mm) wall thickness), must be used on all horizontal vent runs.

VENTING

#800 SERIES DIRECT VENT TERMINATION KIT(S) INSTALLATION

IMPORTANT: The flex pipe is permanently attached to the exterior plate. DO NOT ATTACH #844 or #845 termination kit to fireplace (or extension kit) until it has passed through wall. Install termination plates to outside wall exterior.

HORIZONTAL TERMINATIONS Refer to illustration on following page.

IF TERMINATING AGAINST VINYL SIDING, A VINYL SIDING PROTECTOR, INCLUDED WITH #844 AND #845 DIRECT VENT KITS, MUST BE USED. FOLLOW INSTRUCTIONS INCLUDED.

IMPORTANT: The Kozy Heat wall pass-thru, part #800-WPT or #800-WPT2, must be used on all horizontal vent applications.

CAUTION: This gas appliance must not be connected to a chimney flu serving another type of appliance.

NOTE: Page 22has information on restrictor installation in conjunction with venting installation. Page 50 has information on restrictor recommendations depending on burner flame appearance and instructions on installation after venting is completed.

1. If your vent system application does not require an extension kit, proceed to step #7.
2. If your vent system application requires one or more extension kits (Part #846), proceed with the following steps. Each #846 extension kit contains enough 5" & 8" flexible aluminum to extend chimney an additional 6' (1.83 m).
3. Gently stretch 5" & 8" flexible aluminum pipes on termination kit (#844 or #845) and on each extension kit (if used) length required for your installation.

IMPORTANT: DO NOT STRETCH EXTENSION KIT BEYOND 6' (1.83 m). DO NOT STRETCH BEYOND WHAT IS REQUIRED - IT IS VERY DIFFICULT TO RECOMPRESS THE FLEX PIPES ONCE STRETCHED.

4. Place bead of sealant outside 5" flex pipe collar (C) (end with EXTERNAL lip), sliding it **inside** 5" pipe on top of fireplace (D). Secure with 3 evenly spaced screws.
5. Place bead of sealant inside 8" flex pipe collar (E) (end with the INTERNAL lip), sliding it **over** 8" pipe on top of fireplace (F). Secure with 3 evenly spaced screws.
6. If additional extension kits are required, repeat steps #4 - #5, placing 5" & 8" pipes onto previous extension kit. **OPTIONAL:** Place insulation between 8" pipe and wall studs.
7. With spacer legs toward the wall, slide interior firestop (H) over 8" pipe and attach to interior wall (over wall materials).

NOTE: Attachment brackets are included with termination kit. These optional brackets should be screwed or nailed (not provided) onto top and bottom of 9-1/2" (241 mm) H x 9-1/2" (241 mm) W opening on exterior of house. The termination plates then fit between these brackets. Using screws provided, secure brackets to termination box (A). Attach vinyl siding protector (G).

8. Apply liberal bead of exterior sealant around outer edge of termination box (A), placing assembly through opening in exterior wall. Place screws through four slots (B), securing it in place.
9. Gently pull 5" & 8" pipes down to top of extension kit, or top of fireplace if no extension kits were used.
11. Place bead of sealant outside 5" flex pipe collar (C) and slide it into 5" pipe on extension kit or top of fireplace (D). Secure with 3 evenly spaced screws.
12. Place bead of sealant inside 8" flex pipe collar (E) and slide it over 8" pipe on extension kit or top of fireplace (F). Secure with 3 evenly spaced screws.

ILLUSTRATION ON FOLLOWING PAGE.

FLEXIBLE #800 SERIES cont.

A	TERMINATION BOX
B	SLOTS IN EXTERIOR WALL PLATE
C	5” FLEX PIPE COLLAR
D	5” PIPE ON FIREPLACE OR EXTENSION KIT
E	8” FLEX PIPE COLLAR
F	8” PIPE ON FIREPLACE OR EXTENSION KIT
G	VINYL SIDING PROTECTOR
H	INTERIOR FIRESTOP

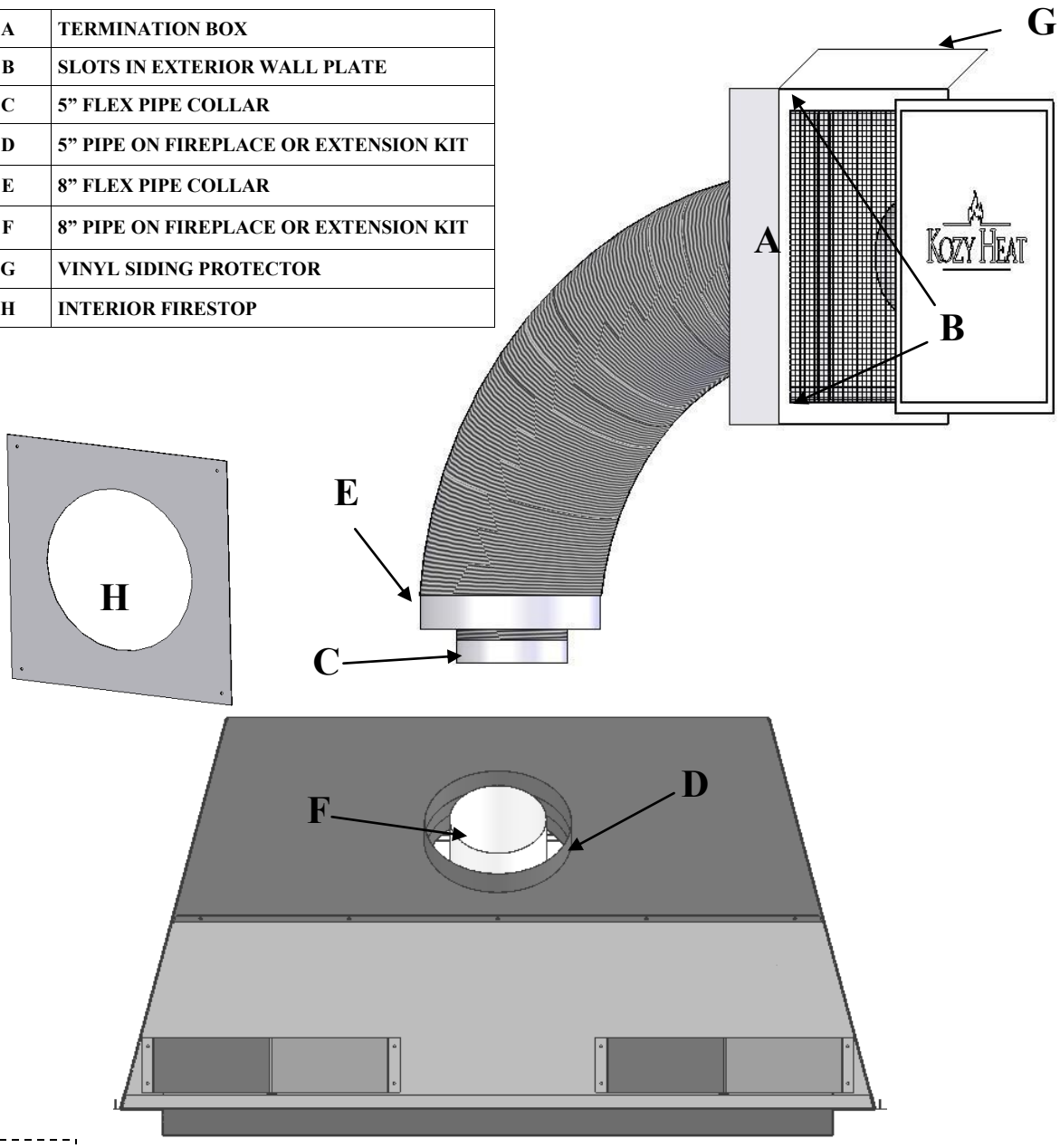

Figure 25a

TERMINATION VENT CAP LOCATION

This gas appliance must not be connected to a chimney serving any other appliance.

1. Terminations against vinyl siding must use a vinyl siding protector. Follow instructions included.
2. DO NOT RECESS TERMINATION KIT INTO OUTSIDE BUILDING MATERIALS - i.e.: brick, stone, siding, etc. If necessary, extend framing so that termination kit will be exposed once building materials are installed.
3. Vent termination must not be located where it will become plugged by snow or other material. The flow of combustion and ventilation air must be not obstructed.

LOCATION CLEARANCES

A. Above grade, veranda, porch, deck, balcony - 12" (305mm).
B. Operable window or door - CANADA: 12" (305 mm). US: 9" (229mm).
C. Permanently closed window* - 12" (305mm) (recommended to prevent condensation on window).
D. Ventilated soffit* - 24" (610mm).
E. Unventilated soffit* - 12" (305mm).
F. Outside corner* - 12" (305mm).
G. Inside corner* - 12" (305mm).
H. Meter / Regulator: Not to be installed above a gas meter/regulator assembly within 3ft. (914mm) horizontally from the centerline of the regulator.
I. Gas Service regulator vent outlet - 3ft. (914mm).
J. Non-mechanical air supply inlet to building or the combustion air inlet to any other appliance. CANADA: 12" (305mm). US: 9" (229mm).
K. Mechanical air supply inlet. CANADA: 6ft. (1.83m) US: 3ft. (914mm) above if within 10ft. (3.05m) horizontally. Massachusetts installations: 10ft. (3.05m).
L. Above paved side-walk or paved driveway located on public property - 7ft. (2.13m).

NOTE: A vent cannot be located directly above a side-walk or paved driveway that is located between two single family dwellings and serves both dwellings.

M. Under veranda, porch, deck, or balcony (must be fully opened on a minimum of 2 sides) - 12" (305mm).
N. Between two horizontal terminations - 12" (305mm).
O. Between two vertical terminations - 12" (305mm). Terminations may be same height.
P. Above furnace exhaust or inlet - 12" (305mm).

*Clearance must be in accordance with local installation codes & the requirements of the gas supplier.

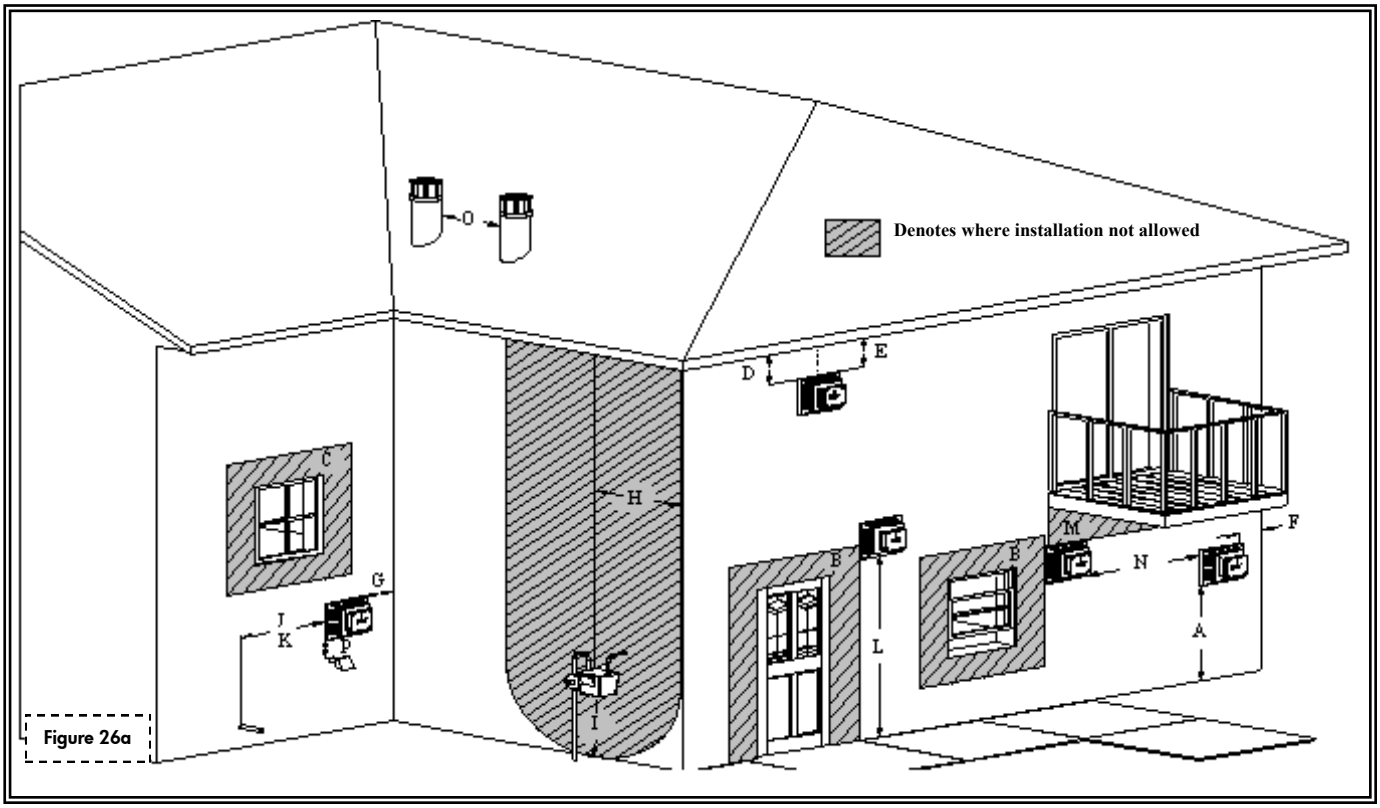

Figure 26a

VENTING (Vertical Cap Requirements)

VENT TERMINATION CLEARANCES

Roof Pitch	H (Min.) Ft.	H (Min.) m
Flat to 6/12	1.0	0.30
Over 6/12 to 7/12	1.25	0.38
Over 7/12 to 8/12	1.5	0.46
Over 8/12 to 9/12	2.0	0.61
Over 9/12 to 10/12	2.5	0.76
Over 10/12 to 11/12	3.25	0.99
Over 11/12 to 12/12	4.0	1.22
Over 12/12 to 14/12	5.0	1.52
Over 14/12 to 16/12	6.0	1.83
Over 16/12 to 18/12	7.0	2.13
Over 18/12 to 20/12	7.5	2.27
Over 20/12 to 21/12	8.0	2.44

CAUTION: This appliance must not be connected to or joined with any chimney flue serving any other appliance.

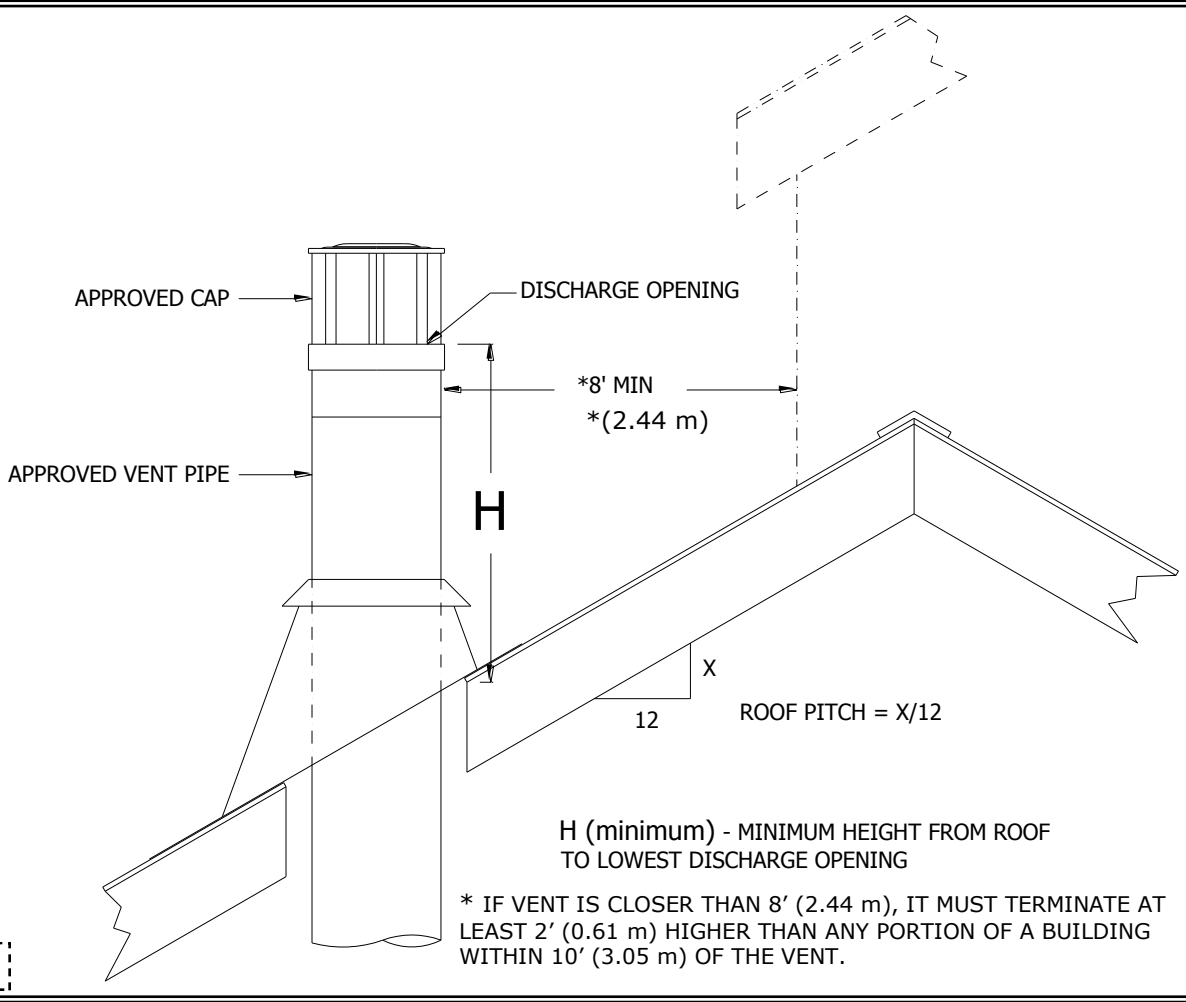

Figure 27a

#PRC-500 LOG SET INSTALLATION

ATTENTION: If converting to LP (propane) gas or installing optional light kit do so now before installing log set. Follow instructions included with kit.

NOTE: Log numbers are located on the bottom of each log. Refer to following instructions and illustrations for proper placement.

CAUTION: Do not place logs directly over burner port holes. Improper log placement may affect flame appearance and cause excessive soot to build up on logs and glass.

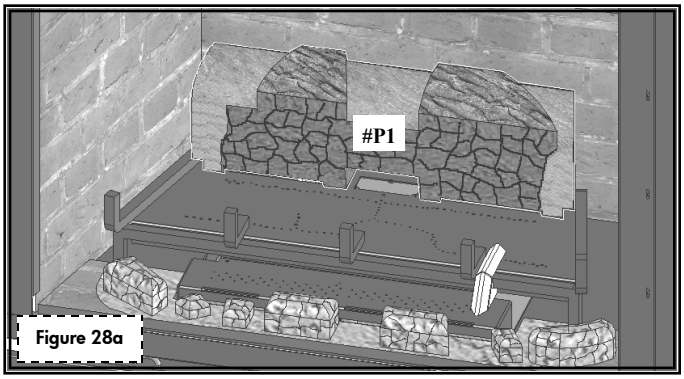

Position log #P1 over pilot shield, pulling log forward until it reaches backside of burner ports.

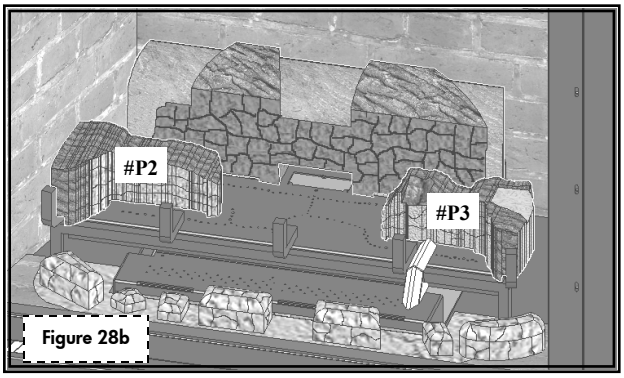

Position logs #P2 & #P3 onto burner as shown above.

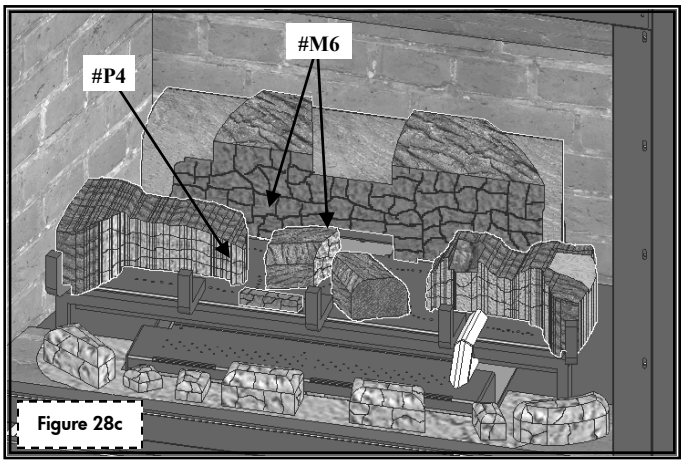

Position #M6 (2) and #P4 logs onto burner as shown.

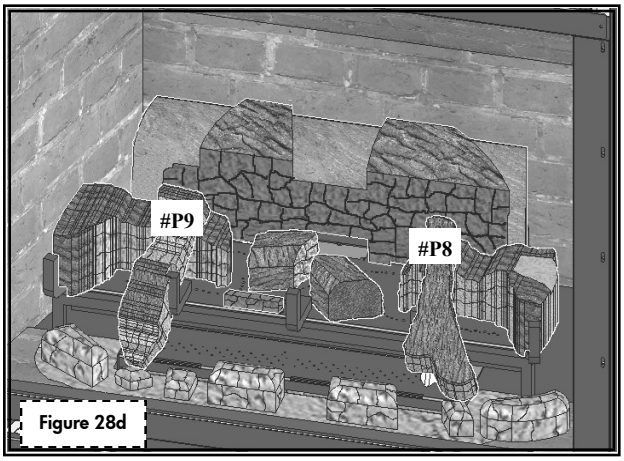

Position logs #P8 & #P9 onto base logs and log grate. The #P8 log is placed over burner jumper tube.

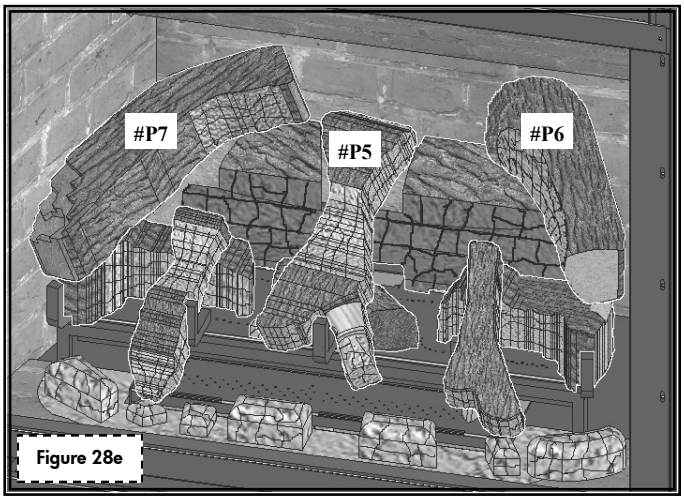

Install logs #P5 - #P7 as shown.

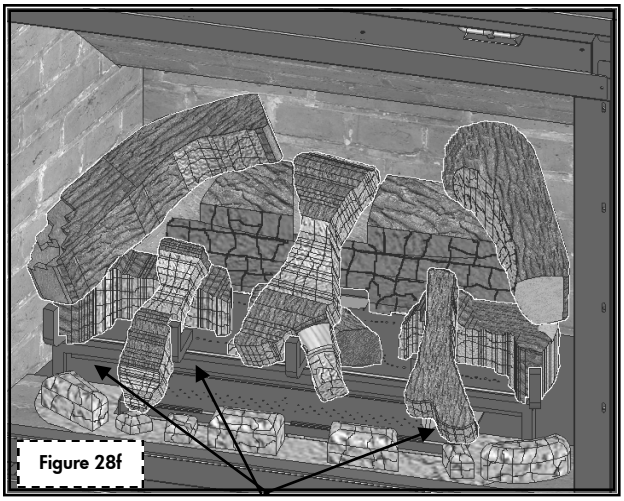

Randomly place 'Klinkers' in this area. Do not place 'Klinkers' directly on burner ports
Use a steel or stiff bristle nylon brush to distribute Rock Wool Embers onto logs and burner.

CONTROL BOARD REMOVAL

CAUTION: If burner and/or pilot have been burning, use appropriate protection to avoid burns or damage to personal property before removing any components.

NOTE: Illustrations shown with PR-36valve components.

1. **Model PR-36:** Turn gas control knob to 'OFF'.

   Model PR-36-IPI: Use remote to turn fireplace off.

2. Shut off gas supply at manual shut-off valve.

3. Disconnect gas line flex tube from the manual shut-off valve.

4. **Model PR-36:** Disconnect any wall switch, remote control or thermostat wires from top & bottom terminals on gas valve.

   Model PR-36-IPI: Unplug all components from electrical outlet, disconnect all wiring harnesses attached to gas valve.

5. Remove upper hood, upper louver.

6. Remove glass assembly.

7. Remove logs, pilot shield and ember log refractory.

8. Remove pilot shield.

9. Remove optional light kit light cylinders, amber light filters, and halogen bulbs if installed.

10. Remove screws securing front left and back right log grate legs. Remove from firebox by lifting front of burner assembly up out of flange while pushing pilot assembly back slightly.

11. Remove screws securing front burner assembly. Remove front burner assembly.

12. Remove adjustable venturi mounting spacers.

13. Remove screws securing optional light kit light stands if installed. Carefully push stands off control board.

14. Remove (8) screws securing control board. Lift board up and out of firebox.

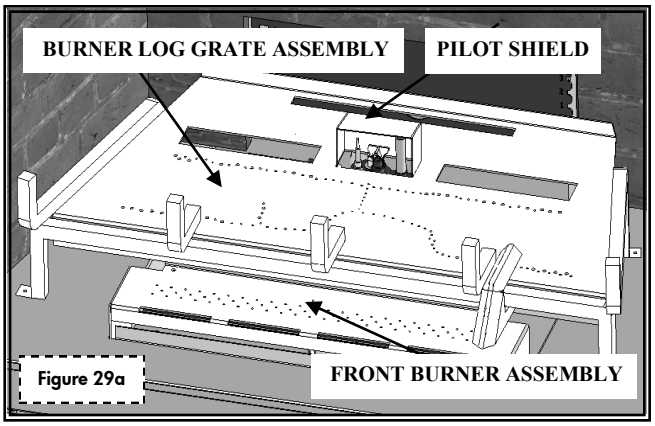

Figure 29a

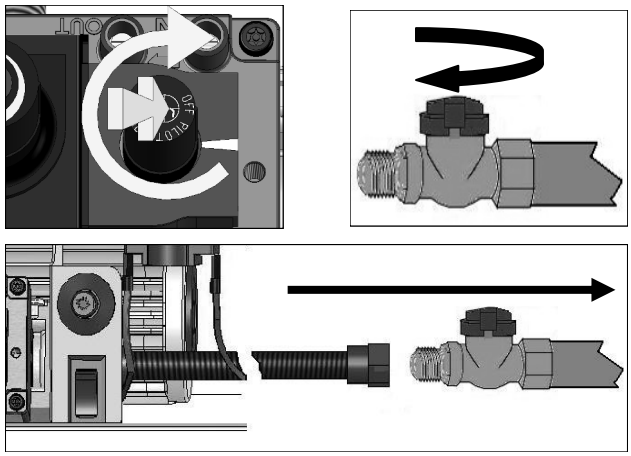

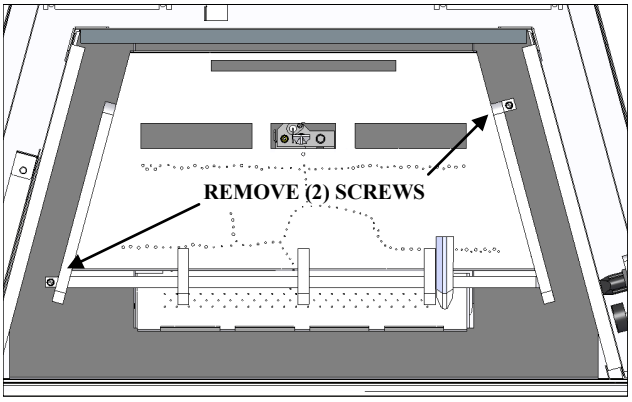

REMOVE (2) SCREWS

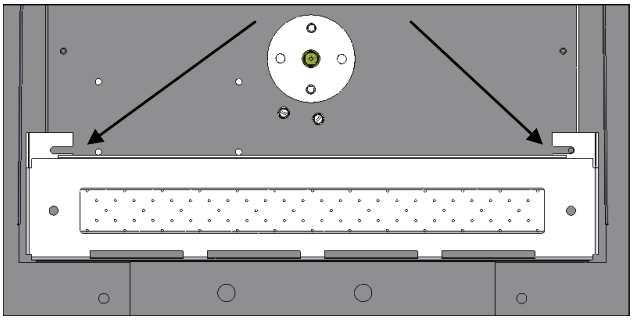

REMOVE (8) SCREWS

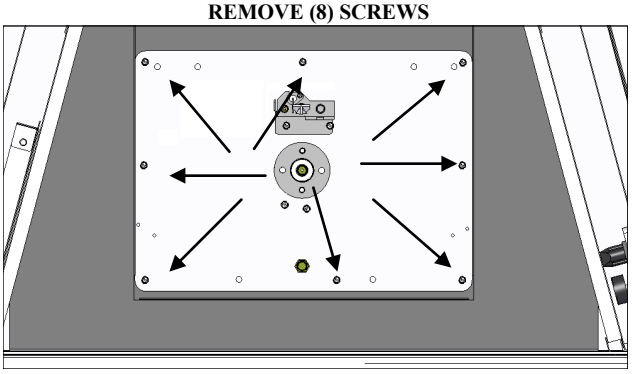

Figure 29b

CONTROL BOARD INSTALLATION

WARNING: DO NOT OPERATE THIS FIREPLACE WITHOUT SEALING GASKET (LOCATED UNDER CONTROL BOARD) IN PLACE. IF GASKETING IS DAMAGED, IT MUST BE REPLACED.

NOTE: Illustrations shown with PR-36 valve components.

1. Place control board in firebox, aligning holes in control board with holes in firebox bottom. MAKE SURE SEALING GASKET IS IN PLACE ON FIREBOX BOTTOM! Secure control board to firebox bottom with (8) screws previously removed.

2. Reinstall optional light kit light kit stands if previously removed.

3. Place venturi spacers onto venturi mounting studs.

4. Re-install front burner assembly, making sure burner tube is positioned over burner orifice. Secure with screws previously removed.

5. Reinstall back burner/log grate assembly by positioning burner tube into venturi collar on control board and pilot assembly through rectangular opening. Secure front left and back right legs with screws previously removed.

6. Reinstall pilot shield.

7. Reinstall ember refractory.

8. Reinstall optional light kit halogen bulbs, light cylinders and amber light filters if previously removed.

9. Reinstall log set. Page 28.

10. Reconnect gas line to manual shut-off valve.

11. **Model PR-36:** Reconnect any wall switch, remote control or thermostat wires to top and bottom terminals on gas valve.

    Model PR-36-IPI: Re-connect all wiring harnesses to gas valve. Plug all components into electrical outlet.

12. Reinstall glass frame assembly. Page 14.

13. Reinstall upper louver & upper hood. Page 31.

14. Turn gas on.

15. Verify proper log placement, operation of fireplace, and any electrical components.

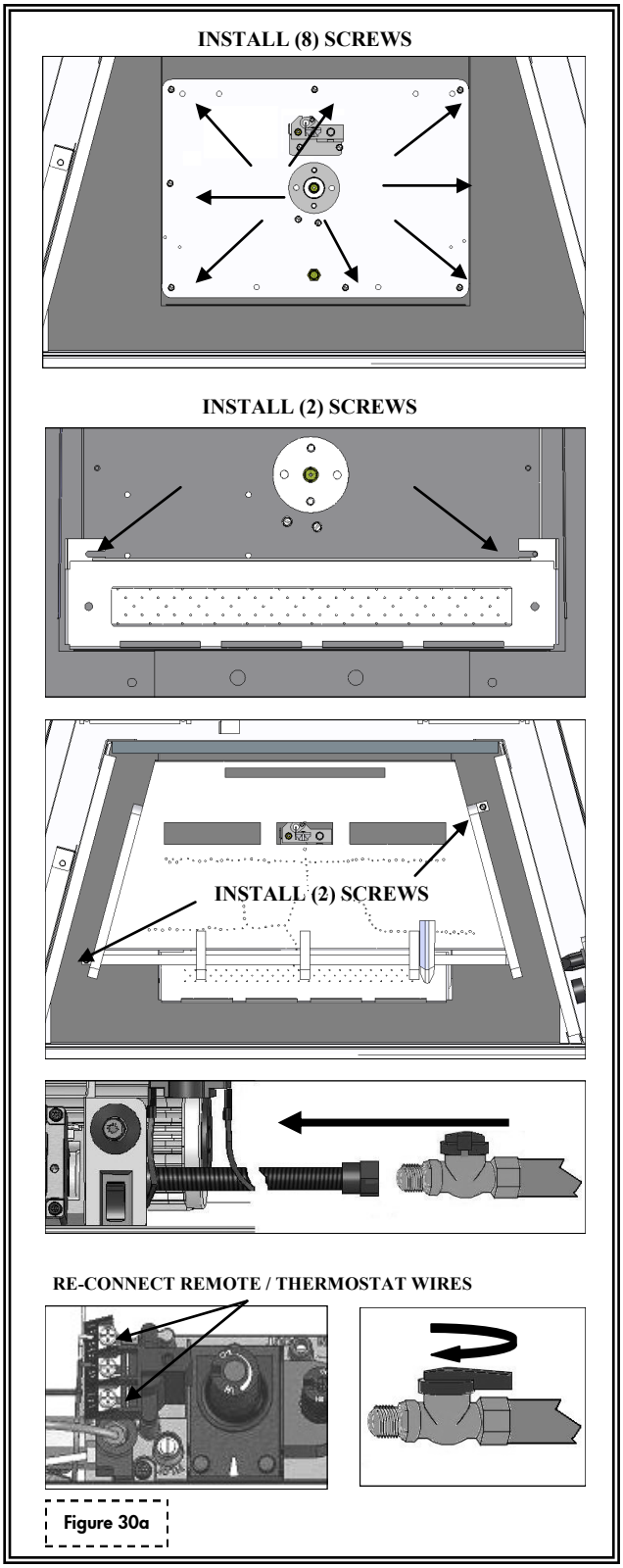

Figure 30a

CAUTION: CHECK ALL CONNECTIONS FOR LEAKS, WHETHER FIELD OR FACTORY MADE.

GRILL SET

INSTALLATION

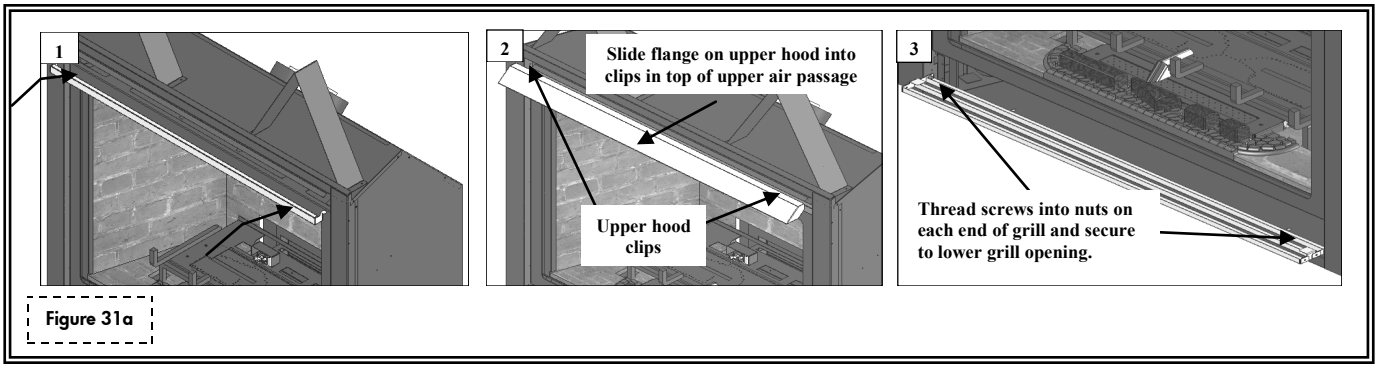

Figure 31a

1. Align hooks in upper louver to slots located in fireplace face. Set down into position.

2. Insert upper hood flange into clips located at top of upper air passage, keeping in mind this is a fairly tight fit.

3. Partially thread (2) screws (included in components packet) into nuts at each end of lower grill. Secure to fireplace by threading screws into corresponding holes in inside flange of lower grill opening. The lower grill can now be opened and closed to access gas valve and controls.

REMOVAL

1. Use both hands to pull hood out of upper air passage clips.

2. Lift upper louver up and out of slots.

3. Remove screws securing lower grill at each end to remove from fireplace.

PR-36 VALVE & PILOT ASSEMBLY COMPONENTS

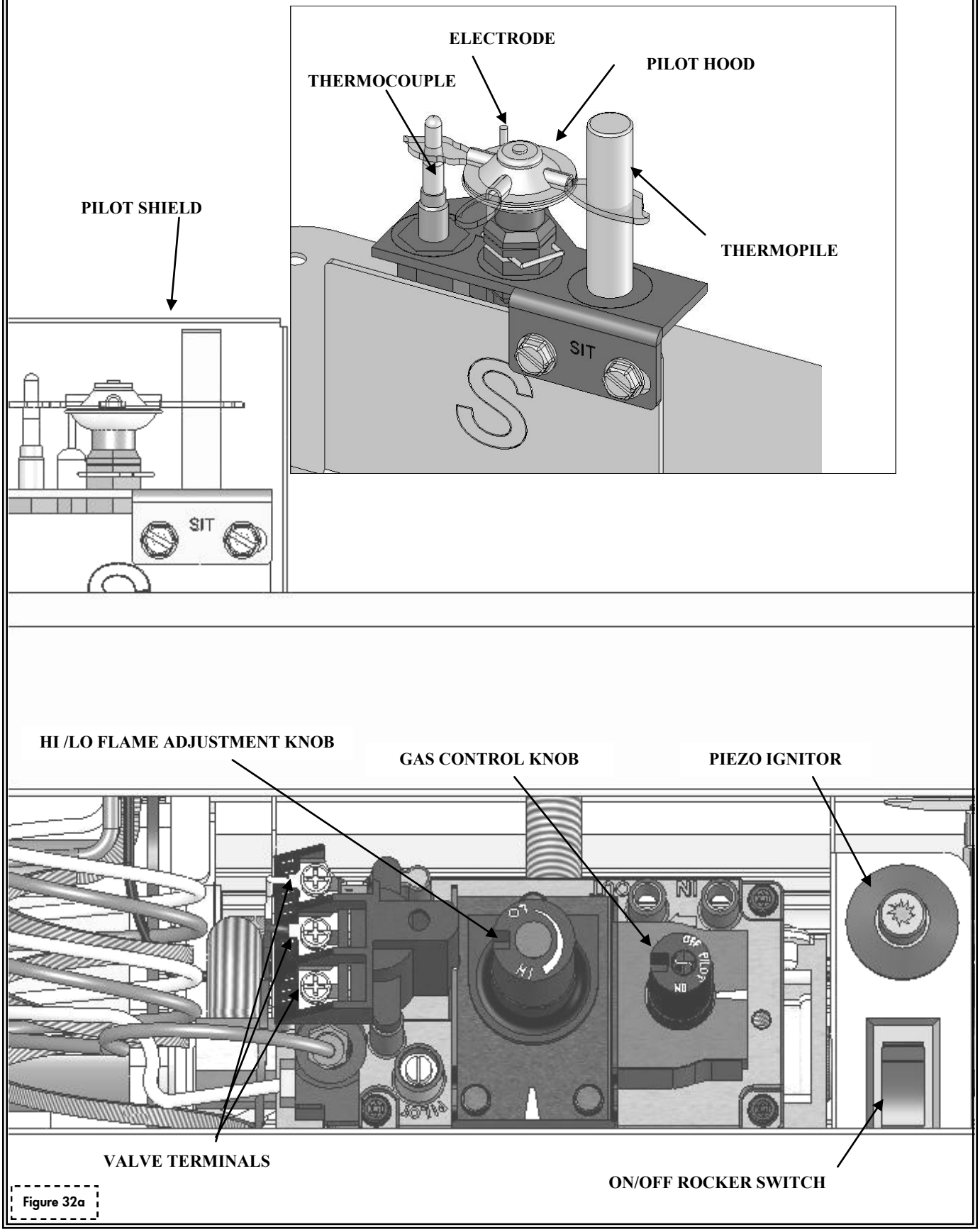

Figure 32a

PR-36 LIGHTING AND SHUTDOWN

FOR YOUR SAFETY - READ BEFORE LIGHTING

WARNING: IF YOU DO NOT FOLLOW THESE INSTRUCTIONS EXACTLY, A FIRE OR EXPLOSION MAY RESULT, CAUSING PROPERTY DAMAGE, PERSONAL INJURY OR LOSS OF LIFE.

DUE TO HIGH SURFACE TEMPERATURES, KEEP CHILDREN, CLOTHING AND FURNITURE AWAY.

This appliance needs fresh air for safe operation and must be installed so there are provisions for adequate combustion and ventilation air.

1. This appliance has a pilot which must be lighted by hand. When lighting the pilot, follow these instructions exactly.
2. BEFORE LIGHTING, smell all around the appliance for gas. Be sure to smell next to the floor because some gas is heavier than air and will settle on the floor.
3. Use only your hand to push in or turn the gas control knob. Never use tools. If the knob will not push in, or turn by hand, do not try to repair it, call a qualified service technician. Forced or attempted repair may result in a fire or explosion, and loss of warranty.
4. Do not use this appliance if any part has been under water. Immediately call a qualified service technician to inspect the appliance and to replace any part of the control system which has been under water.

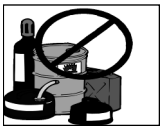

DO NOT STORE OR USE GASOLINE OR OTHER FLAMMABLE VAPORS AND LIQUIDS IN THE VICINITY OF THIS OR ANY OTHER APPLIANCE.

WHAT TO DO IF YOU SMELL GAS:

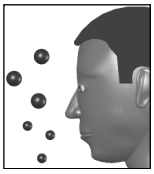

* Do not touch any electrical switches
* Do not try to light any appliance
* Do not use the phone in your building
* Immediately call your gas supplier from a neighbor's phone
* Follow the gas supplier's instructions
* If you cannot reach your gas supplier, call the fire department

WARNING: CHILDREN AND ADULTS SHOULD BE ALERTED TO THE HAZARDS OF HIGH SURFACE TEMPERATURES AND SHOULD STAY AWAY TO AVOID BURNS OR CLOTHING IGNITION. YOUNG CHILDREN SHOULD BE CAREFULLY SUPERVISED WHEN THEY ARE IN THE SAME ROOM AS THE APPLIANCE. CLOTHING OR OTHER FLAMMABLE MATERIAL MUST NOT BE PLACED ON OR NEAR THE APPLIANCE.

NOTE: A PAINT SMELL WILL OCCUR DURING THE FIRST FEW HOURS OF BURNING. IT IS RECOMMENDED TO LEAVE THE FAN OFF DURING THIS PERIOD TO HELP SPEED THE PAINT CURING PROCESS.

NOTE: THIS FIREPLACE MAY PRODUCE NOISES OF VARYING DEGREE AS IT HEATS AND COOLS DUE TO METAL EXPANSION AND CONTRACTION. THIS IS NORMAL AND DOES NOT AFFECT FIREPLACE PERFORMANCE OR LONGEVITY.

PR-36 LIGHTING AND SHUTDOWN (cont.)

LIGHTING

1. Set thermostat to lowest setting, if installed.

2. Turn off all electrical power to appliance. (Fan).

3. Open lower grill to access gas valve & controls.

A. Push gas control knob in slightly and turn clockwise to "OFF". Wait five (5) minutes to allow any gas that may have accumulated inside firebox to escape. If you then smell gas, **STOP!** Follow safety information on previous page and front cover of this installation manual. If you don't smell gas, go to next step.

NOTE: Gas control knob cannot be turned from "PILOT" to "OFF" unless knob is pushed in slightly. Do not force.

B. Locate pilot - follow metal tube from gas control. (Located inside combustion chamber).

C. Push gas control knob on gas valve in slightly and turn counterclockwise to 'PILOT'. Push valve knob in and hold while repeatedly pressing piezo igniter button until pilot is lit while continuing to hold in gas control knob.

D. Hold gas control knob in for one (1) minute after pilot is lit. Release gas control knob. If pilot goes out, repeat steps C-D. When pilot is lit, proceed to step E.

CAUTION: If knob does not pop up when released, stop and immediately call your service technician or the gas supplier. If pilot will not stay lit after several tries, turn gas control knob to OFF and call your service technician or gas supplier.

E. Push gas control knob in slightly and turn counter-clockwise to 'ON'. The burner can now be turned 'ON' by depressing ON/OFF rocker switch located beside valve, or wall switch, OR by setting thermostat or remote control to desired setting.

F. Turn on all electric power to appliance (if applicable).

NOTE: When fireplace is initially lit, condensation will appear on the glass; this is normal in all gas fireplaces and will disappear after several minutes.

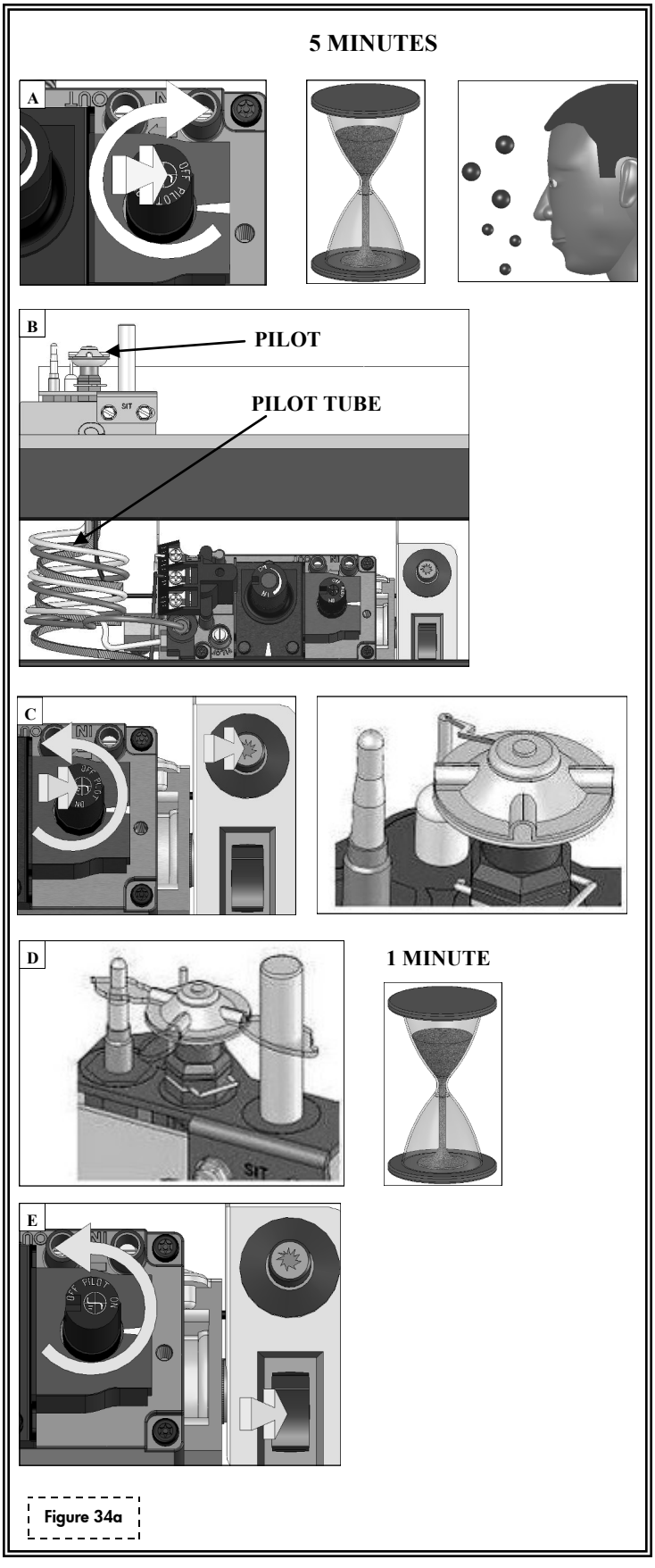

Figure 34a

PR-36 LIGHTING AND SHUTDOWN (cont.)

TURN BURNER OFF

G. To turn burner 'OFF', depress ON/OFF rocker switch to 'OFF', flip 'off' wall switch or adjust setting on thermostat or remote control.

NOTE: The pilot will stay lit.

TURN PILOT OFF

H. Turn pilot off by pushing in and turning gas control knob to 'OFF'. **DO NOT FORCE**.

NOTE: This control valve has an interlock device. If pilot has been turned off, it cannot be relit until thermocouple has cooled, (approximately 60 seconds).

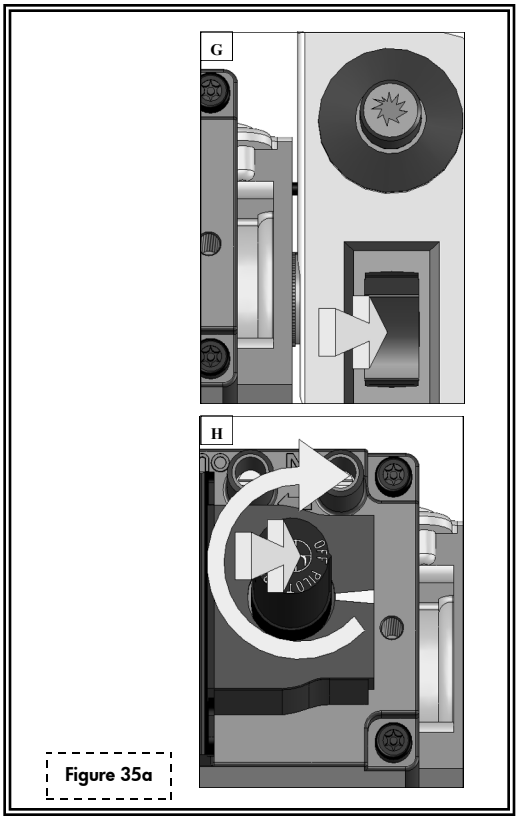

Figure 35a

ADJUSTING FLAME HEIGHT

The gas control valve has a HI /LO flame adjustment knob designed to allow you to tailor the look and heat output of your fireplace. Adjust by turning middle knob on gas control valve.

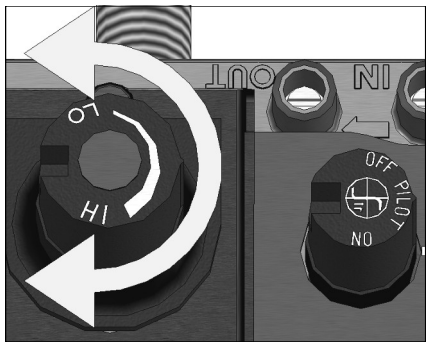

Figure 35b

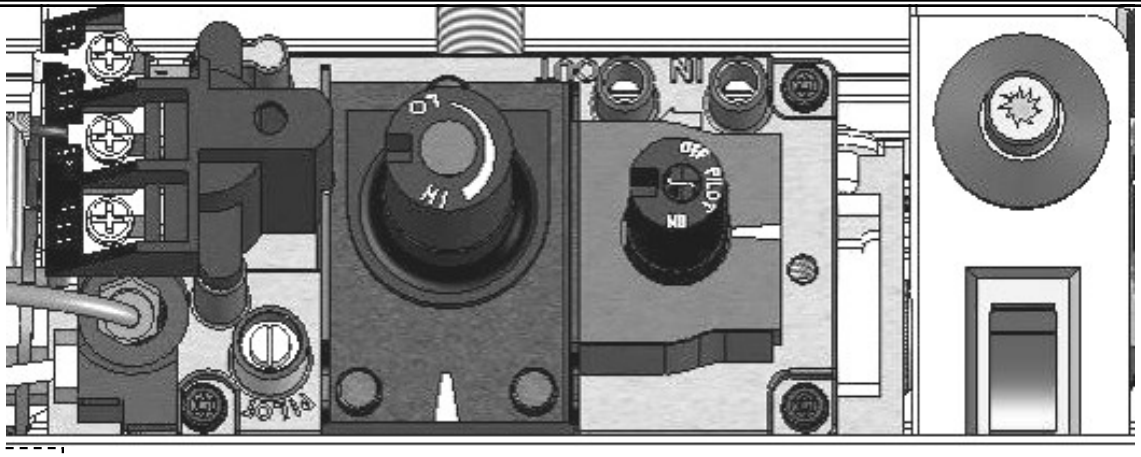

Figure 35c

PR-36 PRESSURE TESTING

IMPORTANT NOTICE: Pressure check taps for manifold (outgoing) and inlet (incoming) pressure have been incorporated into the valve. The pressure tap marked 'OUT' measures outgoing pressure and pressure tap marked 'IN' measures incoming pressure. Follow instructions below for proper testing procedures.

NOTE: The appliance and its individual shutoff valve must be disconnected from gas supply piping system during any pressure testing of that system at pressures in excess of ½ psi.

NOTE: The appliance must be isolated from the gas supply piping system by closing its individual manual shut-off valve during any pressure testing of the gas line at test pressures equal to or less than ½ psi (3.5 kPa).

INLET PRESSURE TEST:

1. Loosen inlet ('IN') pressure tap screw (counter-clockwise).
2. Attach manometer using a 5/16" I.D. hose.
3. Light pilot.
4. Turn gas control knob to 'ON' (burner should not light). Note manometer reading.
5. Press rocker switch to 'ON'. Check pressure to ensure it stays near maximum inlet pressure.
6. Press rocker switch to 'OFF'.
7. Turn gas control knob to 'OFF'.
8. Disconnect hose and tighten screw (clockwise). Screw should be snug, do not over tighten.
9. Relight pilot and turn gas control knob to 'ON'. Reattach manometer to inlet pressure tap to verify it is completely sealed. Manometer should read no pressure.

NOTE: If inlet pressure reading is too high or too low, contact the gas company. Only a qualified gas service technician should adjust the incoming gas pressure.

MANIFOLD PRESSURE TEST:

CAUTION: A LOW PRESSURE READING CAN CAUSE DELAYED IGNITION.

1. Light pilot.
2. Loosen manifold ('OUT') pressure tap screw (counter-clockwise).
3. Attach manometer to pressure tap using a 5/16" I.D. hose.
4. Turn gas control knob to 'ON'.
5. Press rocker switch to 'ON' and note manometer reading.
6. Press rocker switch to 'OFF'.
7. Disconnect manometer hose and tighten screw (clockwise). Screw should be snug, do not over tighten.
8. Attach manometer to manifold pressure tap to verify it is completely sealed. Manometer should read no pressure when rocker switch is pressed to 'ON'.

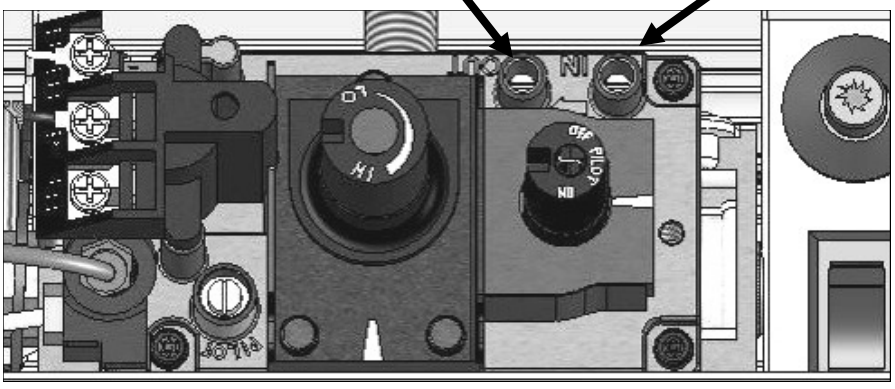

Figure 36a

PR-36-IPI WIRING SCHEMATICS

IMPORTANT: THIS SYSTEM REQUIRES ELECTRICITY (110 V) AND / OR BATTERIES TO OPERATE. USING BATTERY BACK UP WILL OPERATE BURNER ONLY. FAN AND LIGHT COMPONENTS WILL NOT FUNCTION ON BATTERY BACK-UP POWER.

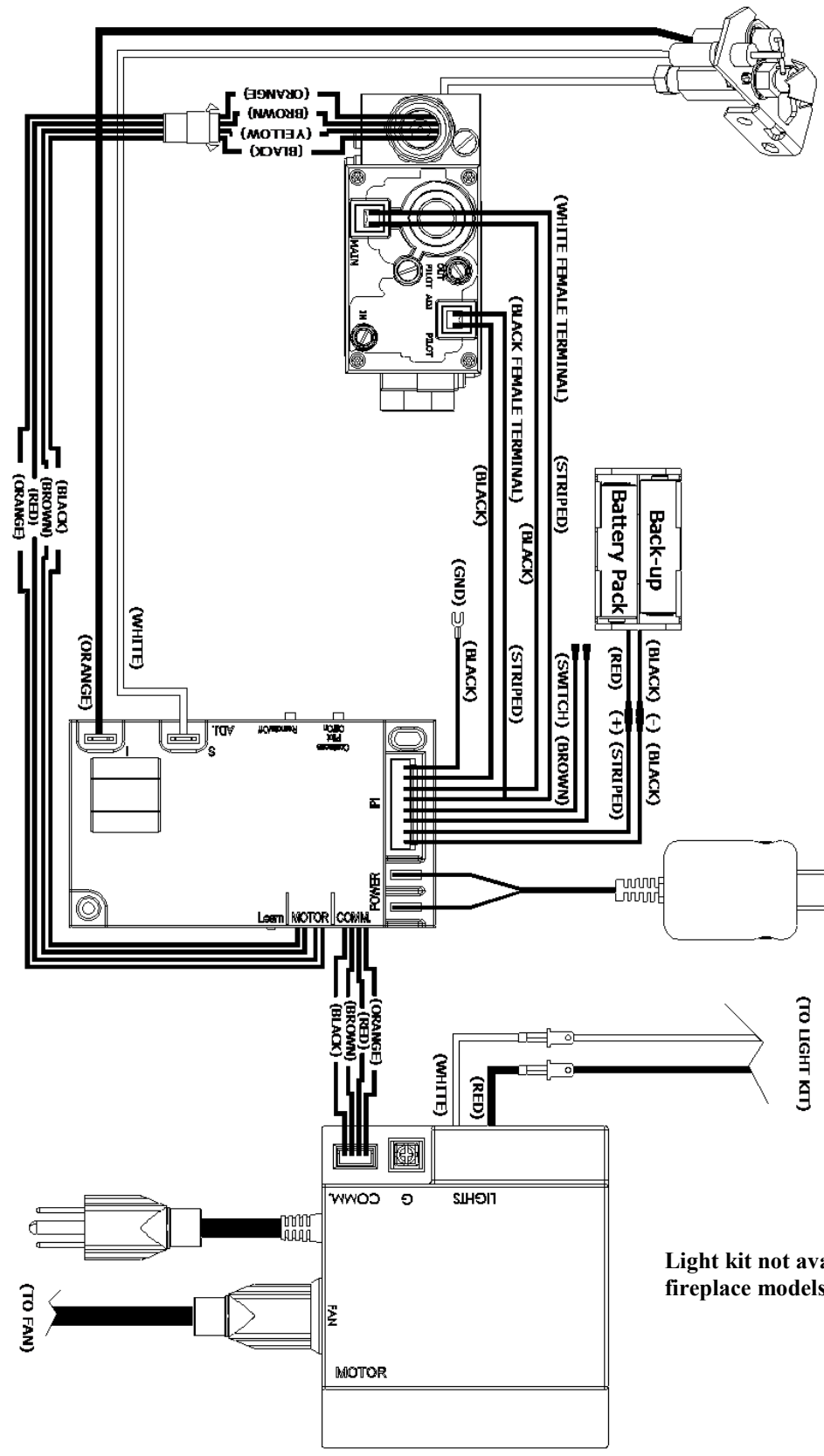

Light kit not available in all fireplace models

Figure 37a

PR-36-IPI VALVE & PILOT ASSEMBLY COMPONENTS

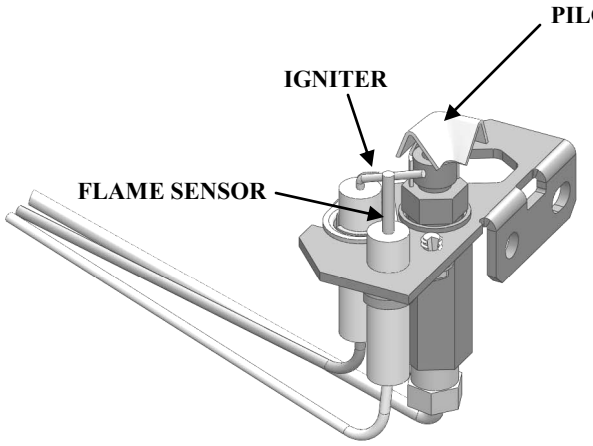

IPI PILOT ASSEMBLY

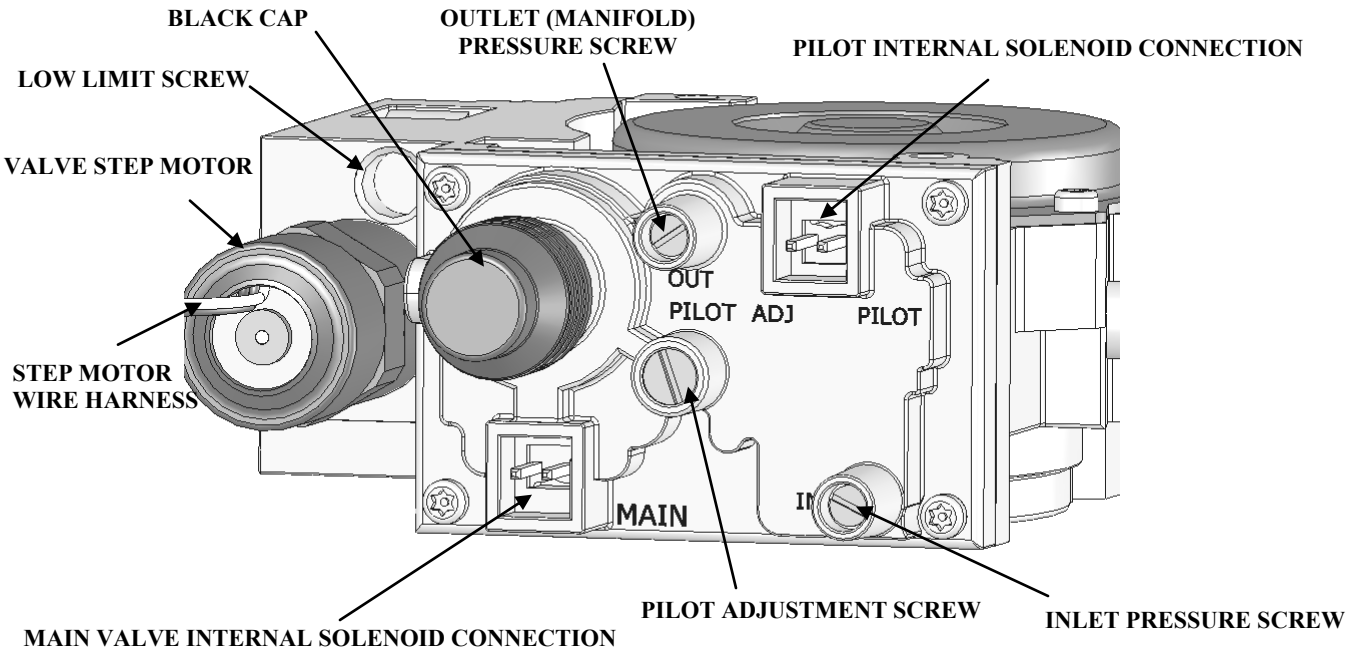

IPI GAS VALVE

Figure 38a

PR-36-IPI CONTROL MODULE COMPONENTS

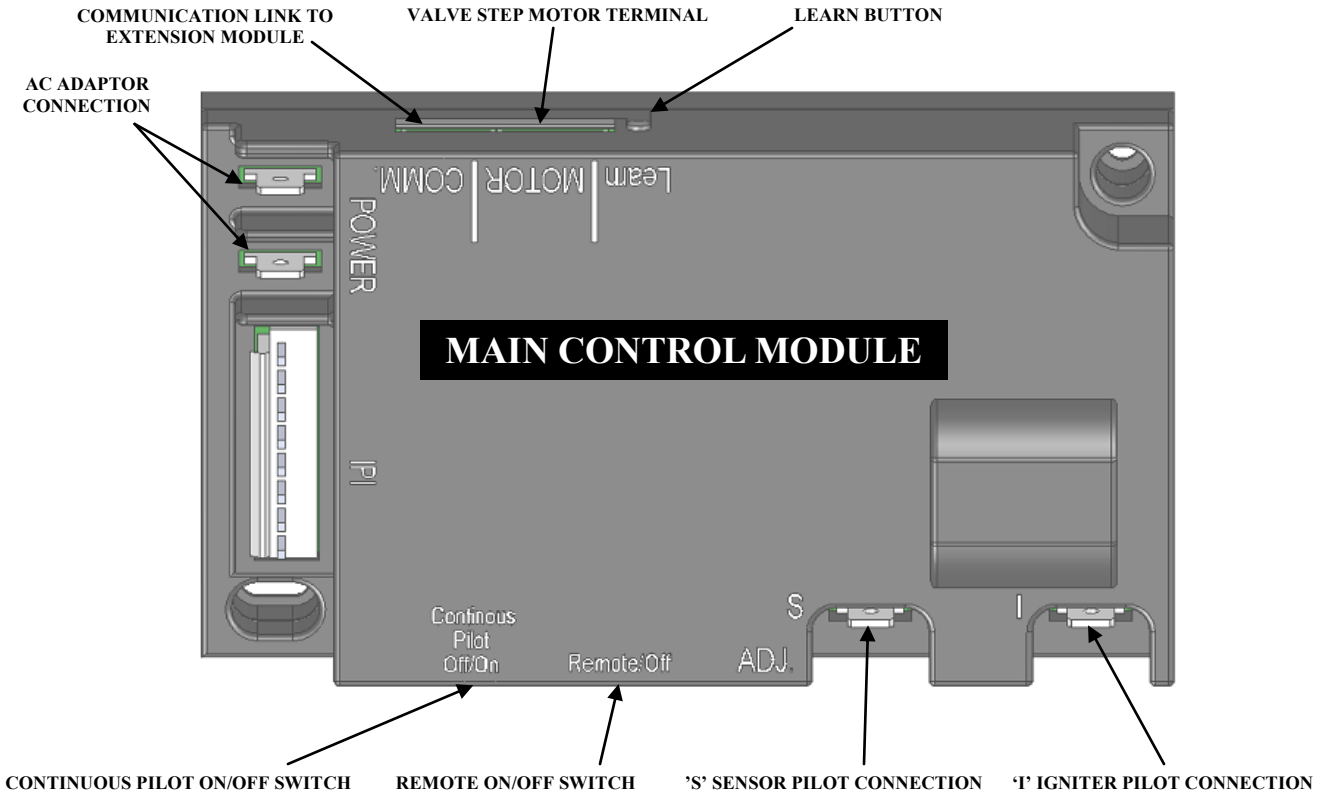

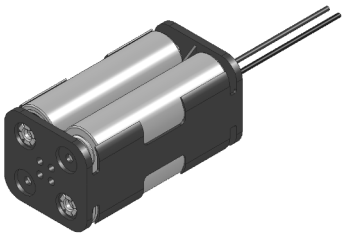

BACK-UP BATTERY PACK

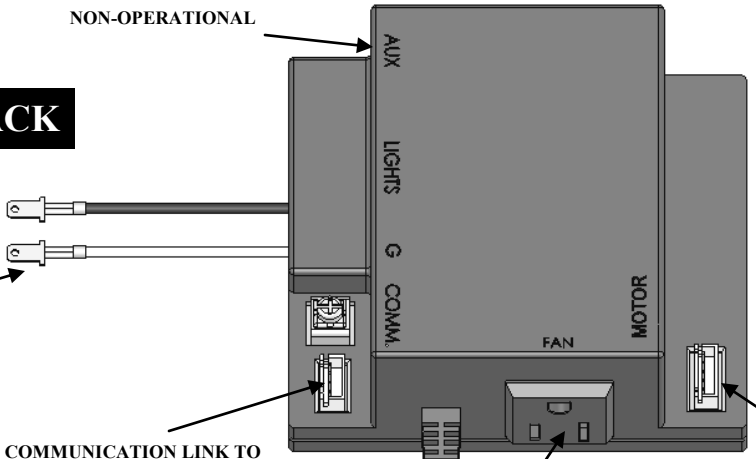

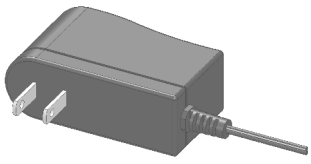

AC ADAPTOR

EXTENSION MODULE

Figure 39a

PR-36-IPI REMOTE CONTROL INFORMATION

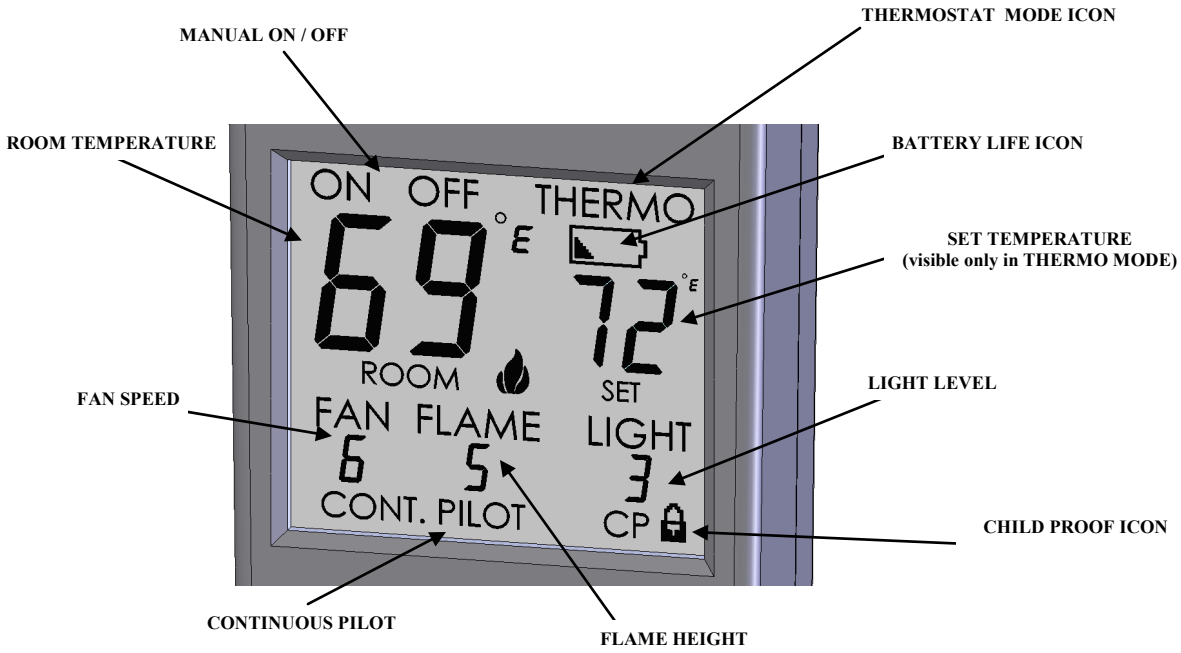

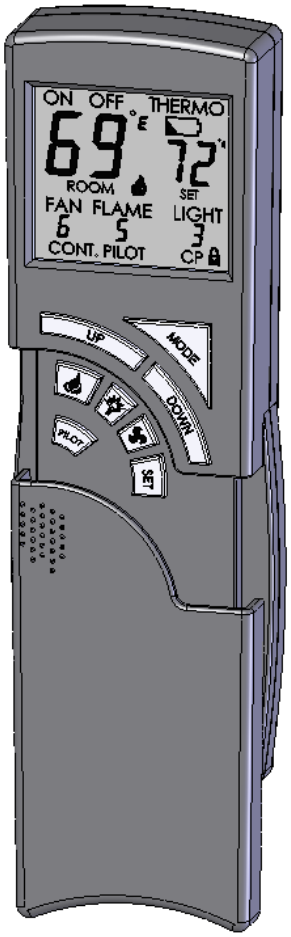

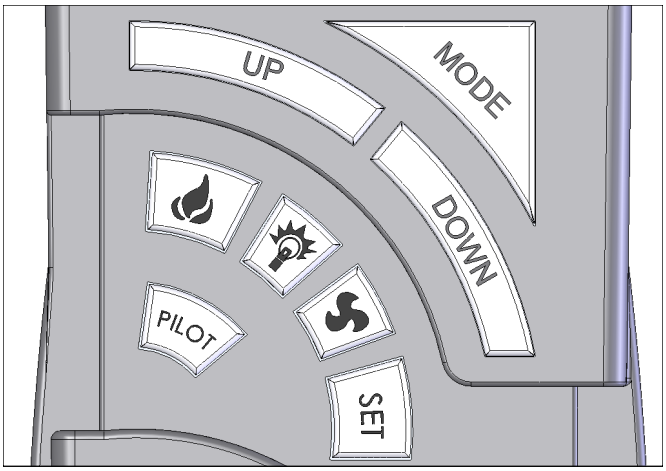

Figure 40a

PR-36-IPI INFORMATION

ELECTRICAL WARNING AND INFORMATION:

- **Electrical wiring must be installed by a licensed electrician.**
- **Do NOT wire 110V to wall switch.**
- **Uninterrupted or continuous power is required at all times in IPI systems EXCEPT when using battery back-up.**
- **Incorrect wiring will override IPI safety lockout and may cause an explosion.**
- **Disconnect 110V before servicing**

A double receptacle box cover and (3) wire nuts are supplied in fireplace components packet to be used when hardwiring to electrical box located under firebox on right side of fireplace. **Ensure receptacle box cover is installed with flange to top**.

ATTENTION: THIS SYSTEM GOES THROUGH A CALIBRATION MODE WHEN SWITCHING FROM 'ON' TO 'THERMO' TO 'OFF' MODES, CREATING A HUMMING SOUND WHICH IS A NORMAL PART OF OPERATION.

CONTINUOUS PILOT (FOR VERY COLD CONDITIONS)

The IPI gas control system has the option of a continuous (standing) pilot feature. This allows you to change from a spark-to-pilot system to a standing pilot system during cold weather conditions. By having the pilot on continuously, the firebox will remain warm and a draft is established in the vent, allowing the main burner to turn on with less air-flow disruption.

When continuous pilot mode is activated and fireplace is turned ON, the pilot will spark and light. When fireplace is turned OFF, the pilot will remain lit when main burner has been turned OFF.

This pilot feature can be activated or de-activated by the hand held remote control transmitter. Instructions on following page.

OPERATION USING BATTERY POWER

This fireplace has an optional battery operation if electrical power is lost. Position battery pack with four "AA" size batteries installed between valve and front of fireplace. This is the coolest location under firebox, ensuring longer battery life.

NOTE: When operating fireplace in this capacity, the only function available is flame modulation.

MATCHING SECURITY CODES

Before matching security codes make sure 120V AC is connected and powered to fireplace, and hand held remote control is installed with (2) AA batteries.

It may be necessary to program main control module to LEARN the security code of the hand held remote control upon initial use, if batteries are replaced, or if a replacement remote control is purchased from your dealer.

1. When matching security codes, be sure slide button on main control module is in **REMOTE**; the code will not "LEARN" if slide is in **OFF**.

2. Program main control module to LEARN a new security code by pushing in **LEARN** button on main control module using a pencil point for 2 seconds (you should hear a single 'beep' letting you know module is ready to learn a new code).

3. Press **MODE** button on hand held remote control (you should hear four 'beeps' in rapid succession in main control module, indicating remote control's code has been programmed into the main control module). When an existing main control module is introduced to a new hand held remote control, the new security code will overwrite the old one.

If it ever becomes necessary to clear the memory from the hand held remote control, simply push and hold the **LEARN** button for 10 seconds (you should hear three long beeps in succession). You may now follow steps outlined above to 'RE-LEARN' security codes.

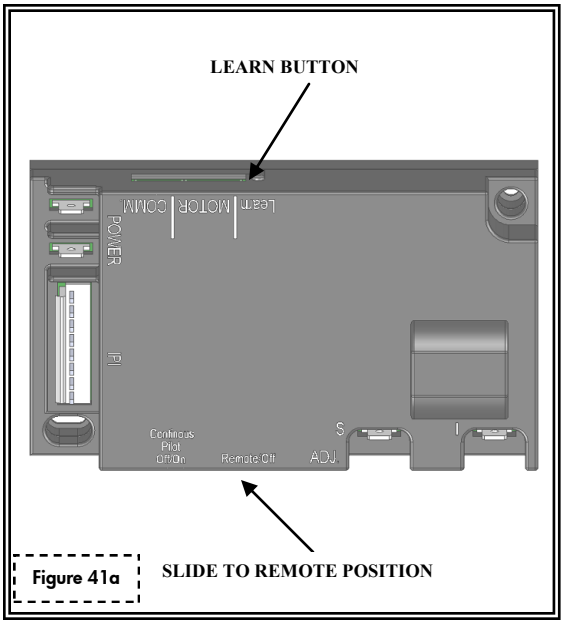

Figure 41a

PR-36-IPI REMOTE CONTROL OPERATION

INITIAL SET-UP:

Plug Extension Module and **AC Adaptor** into receptacles.

Install (4) AAA batteries into battery compartment of **Backup Battery Pack** , making sure batteries are installed in proper direction. Position between valve and front of stove. A Velcro strip has been attached to help secure in place.

The **Hand Held Remote** operates on (2) 1.5V AAA batteries. We recommend always using ALKALINE batteries to extend battery life and improve operational performance.

NOTE: This system is sent to you set up for Natural Gas and temperature units readable in Fahrenheit.

This system allows for gas type conversion and temperature unit conversion by following the setup procedure outlined below.

GAS TYPE CONVERSION:

Press and hold **Learn** Button on Main Control Module for 20 seconds. A beep will be heard letting you know the procedure has been completed.

If converting from NAT to LP gas: (1) one second long beep

If converting from LP to Nat gas: (3) three second long beep

Continue with gas type conversion by following instructions included with gas conversion kit.

CELSIUS/FAHRENHEIT CONVERSION:

Press **UP** and **DOWN** keys simultaneously to choose Celsius or Fahrenheit.

IMPORTANT SAFETY FEATURE:

This system has a maximum room temperature limit of 95° F (35° C) in both manual and thermostat modes. When room temperature is at or above this point the system will shut down and the hand held remote control will read **OFF**. If you turn the system **ON** when room temperature is still at or above this temperature, the system will again shutdown after 2 minutes when room temperature is recalculated.

CONTINUOUS PILOT FEATURE:

Activation of this optional feature is accomplished by pressing the **PILOT** button once. The continuous pilot icon will appear on the LCD screen. Pressing **PILOT** button again will de-activate this feature.

This feature can also be activated via **CONTINUOUS PILOT** switch on Main Control Module.

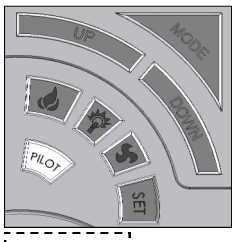

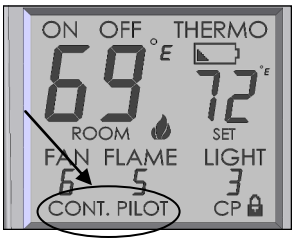

Figure 42a

CHILDPROOF FEATURE:

Activation of this optional feature is accomplished by pushing **SET & UP** buttons simultaneously for 5 seconds. The childproof icon will appear on the screen. When a transmitter button is pressed the icon will flash on screen, but no signal will be transmitted. Pressing and holding these same two buttons again for more than 5 seconds will de-activate this function.

This feature controls only manual functions of the hand held remote, automatic functions (thermostat mode) will not be effected.

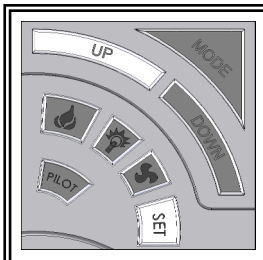

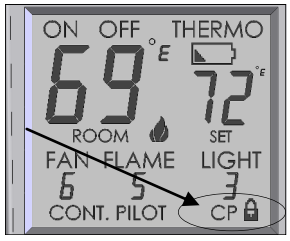

Figure 42b

PR-36-IPI REMOTE RECEIVER INFORMATION cont.

MANUAL MODE:

This remote can be manually or thermostatically operated.
Press **MODE** button for manual ON. The flame icon will appear on the LCD screen. Press **MODE** button again to put the control into **THERMO** mode. Pressing **MODE** again will turn fireplace OFF.

NOTE: The MODE button operates in a series that will cycle from ON to THERMO to OFF.

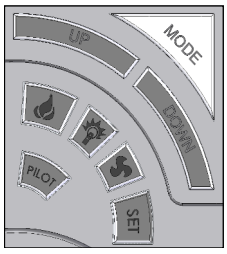

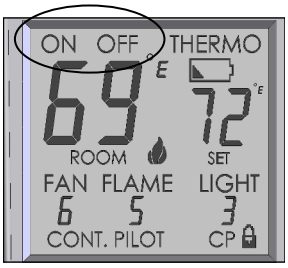

Figure 43a

FAN MODE:

This remote will operate the fan, allowing for (6) different speed levels. When the **FAN** button is pressed, FAN level setting will flash on the LCD screen. Press **UP** or **DOWN** buttons to select desired fan speed level. If no adjustment is made within 7 seconds, the control will exit function setting mode and LCD display will return to normal view.

NOTE: Delayed ON/OFF - The fan will not turn on until fireplace has been burning for 5 minutes and will not turn off for 12 minutes after fireplace has been turned off.

EXCEPTION: If fireplace is turned back on during 12 minute off-delay time frame, the fan will remain on.

This applies to MANUAL and THERMO modes.

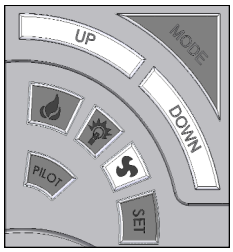

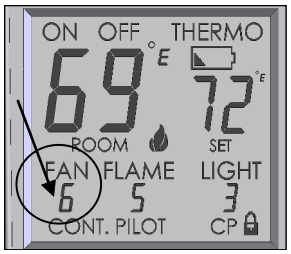

Figure 43b

LIGHTING MODE:

This remote will operate the lights, allowing for (6) different light levels. When **LIGHT** button is pressed, LIGHT level setting will flash on the LCD screen. Press **UP** or **DOWN** buttons to select desired light level. If no adjustment is made within 7 seconds, the control will exit function setting mode and LCD display will return to normal view.

NOTE: There is a 3 second delay before light level setting is achieved.

NOTE: Light operations are completely independent from flame and fan operations.

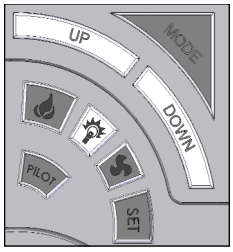

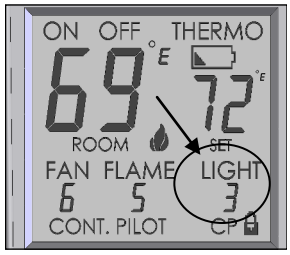

Figure 43c

FLAME MODE:

This remote will operate the flame, allowing for (6) different flame height levels. When **MAIN FLAME** button is pressed, FLAME level setting will flash on the LCD screen. Press **UP** or **DOWN** buttons to select desired flame level. If no adjustment is made within 7 seconds, the control will exit function setting mode and LCD display will return to normal view.

NOTE: The fireplace will initially light at the highest level. After 5 seconds the flame will adjust to last chosen level before fireplace was turned OFF.

This applies to MANUAL and THERMO modes.

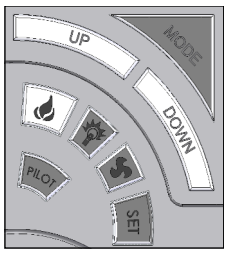

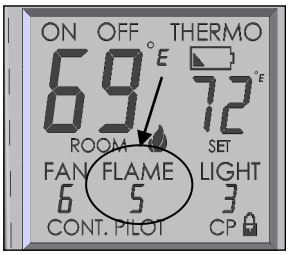

Figure 43d

PR-36-IPI REMOTE RECEIVER INFORMATION cont.

THERMO (THERMOSTAT) MODE:

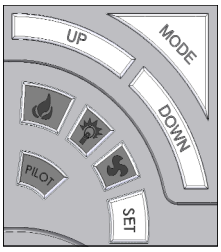

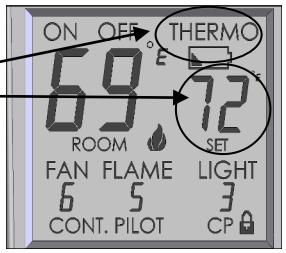

Figure 44a

This remote feature allows you to thermostatically control the fireplace when hand held remote is set to **THERMO** mode.

Set Temperature Range: 45˚F (7˚C) to 90˚F (32˚C).

Set remote to **THERMO** mode by pressing **MODE** button. The smaller **SET** window of numbers appears on the LCD screen. The first SET number will read 45˚F. Press **UP** button to desired set room temperature. Within 5 seconds fireplace will operate to that Set Temperature. The **FLAME, ON** and **THERMO** icons will appear on the LCD screen. By pressing **UP** or **DOWN** buttons a new set temperature may be attained.

SET Temperature will only appear when THERMOSTAT MODE is activated, but is implemented in all MODES with the exception of MANUAL MODE.

NOTE: The flame height can adjust up to (6) different height levels according to amount of heat required. This range however is dictated by the Flame Level setting (see previous page). When desired temperature is met, the fireplace will shut off until more heat is required.

To exit **THERMO** mode press the **MODE** button. This also shuts fireplace OFF.

IMPORTANT: When in THERMO mode the fireplace will not turn on until room temperature falls below SET TEMPERATURE.

SYSTEM OPERATION WITHOUT HAND HELD REMOTE:

This system is designed to operate with the hand held remote or a thermostat, but in the unlikely event that it is required to be operated without the hand held remote or a thermostat, follow this simple procedure.

Slide **REMOTE /OFF** switch on main control module to **OFF**. The fireplace can now be lit and shut off by use of the ON/OFF rocker switch.

NOTE: When operating fireplace in this capacity, the only function available is burner operation on HI.

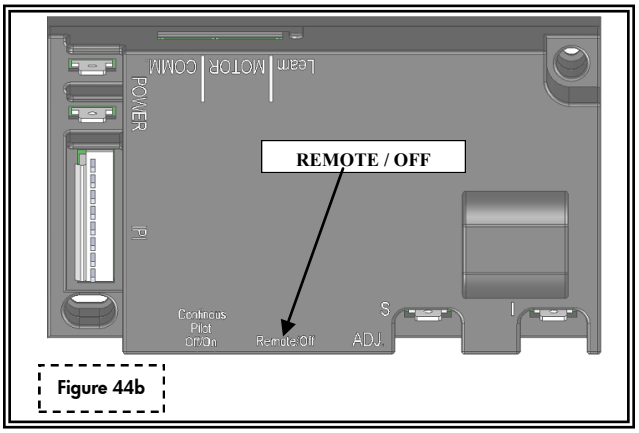

Figure 44b

PR-36-IPI LIGHTING AND SHUTDOWN

FOR YOUR SAFETY - READ BEFORE LIGHTING

WARNING: IF YOU DO NOT FOLLOW THESE INSTRUCTIONS EXACTLY, A FIRE OR EXPLOSION MAY RESULT, CAUSING PROPERTY DAMAGE, PERSONAL INJURY OR LOSS OF LIFE.

DUE TO HIGH SURFACE TEMPERATURES, KEEP CHILDREN, CLOTHING AND FURNITURE AWAY.

This appliance needs fresh air for safe operation and must be installed so there are provisions for adequate combustion and ventilation air.

1. This fireplace is equipped with an ignition device which automatically lights the pilot and main burner. The pilot and burner light automatically with the hand held remote only. **DO NOT** try to light the pilot by hand. Before lighting this fireplace, follow these instructions exactly.
2. BEFORE LIGHTING, smell all around the appliance for gas. Be sure to smell next to the floor because some gas is heavier than air and will settle on the floor.
3. Do not use this appliance if any part has been under water. Immediately call a qualified service technician to inspect the appliance and to replace any part of the control system which has been under water.

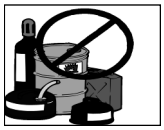

DO NOT STORE OR USE GASOLINE OR OTHER FLAMMABLE VAPORS AND LIQUIDS IN THE VICINITY OF THIS OR ANY OTHER APPLIANCE.

WHAT TO DO IF YOU SMELL GAS:

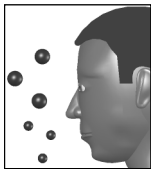

* Do not touch any electrical switches
* Do not try to light any appliance
* Do not use the phone in your building
* Immediately call your gas supplier from a neighbor's phone
* Follow the gas supplier's instructions
* If you cannot reach your gas supplier, call the fire department

WARNING: CHILDREN AND ADULTS SHOULD BE ALERTED TO THE HAZARDS OF HIGH SURFACE TEMPERATURES AND SHOULD STAY AWAY TO AVOID BURNS OR CLOTHING IGNITION. YOUNG CHILDREN SHOULD BE CAREFULLY SUPERVISED WHEN THEY ARE IN THE SAME ROOM AS THE APPLIANCE. CLOTHING OR OTHER FLAMMABLE MATERIAL MUST NOT BE PLACED ON OR NEAR THE APPLIANCE.

NOTE: A PAINT SMELL WILL OCCUR DURING THE FIRST FEW HOURS OF BURNING. IT IS RECOMMENDED TO LEAVE THE FAN OFF DURING THIS PERIOD TO HELP SPEED THE PAINT CURING PROCESS.

NOTE: THIS FIREPLACE MAY PRODUCE NOISES OF VARYING DEGREE AS IT HEATS AND COOLS DUE TO METAL EXPANSION AND CONTRACTION. THIS IS NORMAL AND DOES NOT AFFECT THE PERFORMANCE OR LONGEVITY OF THE FIREPLACE.

PR-36-IPI LIGHTING AND SHUTDOWN (cont.)

LIGHTING

STOP! Read safety information on previous page and front cover of this manual before continuing.

1. Turn off all electrical power to fireplace.

ATTENTION: This fireplace is equipped with an ignition device which automatically lights the pilot. DO NOT try to light the pilot by hand.

2. Press hand held remote **MODE** button to **'OFF'**.

3. Wait five (5) minutes to allow any gas that may have accumulated inside firebox to escape. If you then smell gas, **STOP!** Follow safety information on front cover and on previous page of this installation manual. If you don't smell gas, go to next step.

4. Turn ON all electrical power to fireplace.

5. Press hand held remote **MODE** button to **'ON'**.

CAUTION: If fireplace will not operate, follow instructions TURNING OFF GAS TO FIREPLACE and call your service technician or the gas supplier.

NOTE: When fireplace is initially lit, condensation will appear on the glass; this is normal in all gas fireplaces and will disappear after several minutes.

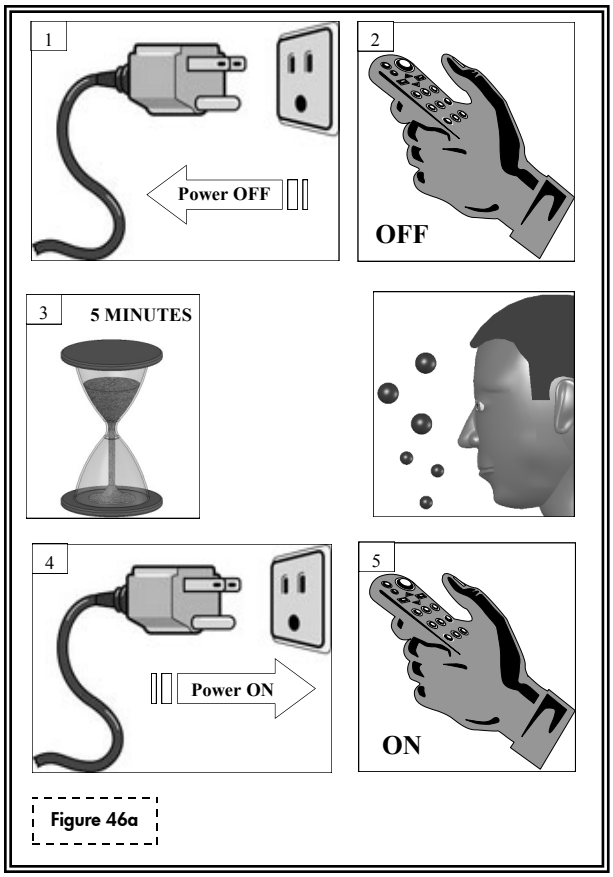

Figure 46a

TURNING OFF GAS TO FIREPLACE

1. Press hand held remote **MODE** button to **'OFF'**.

2. Turn OFF all electrical power to fireplace if service is required.

3. Turn manual shut-off valve to **OFF**.

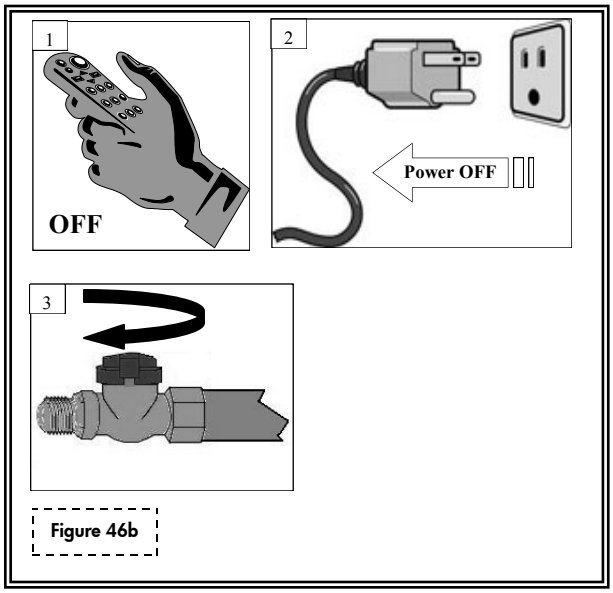

Figure 46b

PRESSURE TESTING (PR-36-IPI)

IMPORTANT NOTICE: Pressure check taps for manifold (outgoing) and inlet (incoming) pressure have been incorporated into the valve. The pressure tap marked 'OUT' measures outgoing pressure and the pressure tap marked 'IN' measures incoming pressure. Follow instructions below for proper testing procedures.

NOTE: The appliance and its individual shutoff valve must be disconnected from the gas supply piping system during any pressure testing of that system at pressures in excess of ½ psi.

NOTE: The appliance must be isolated from the gas supply piping system by closing its individual manual shut-off valve during any pressure testing of the gas line at test pressures equal to or less than ½ psi (3.5 kPa).

INLET PRESSURE TEST:

1. Loosen inlet ('IN') pressure tap screw (counter-clockwise).
2. Attach manometer using a 1/4" I.D. hose.
3. Light fireplace using hand held remote control. Note manometer reading.
4. Turn fireplace off using hand held remote control.
5. Disconnect hose and tighten screw (clockwise). Screw should be snug, do not over tighten.
9. Relight fireplace using hand held remote control. Reattach manometer to inlet pressure tap to verify it is completely sealed. Manometer should read no pressure.

NOTE: If inlet pressure reading is too high or too low, contact the gas company. Only a qualified gas service technician should adjust incoming gas pressure.

CAUTION: A LOW PRESSURE READING CAN CAUSE DELAYED IGNITION

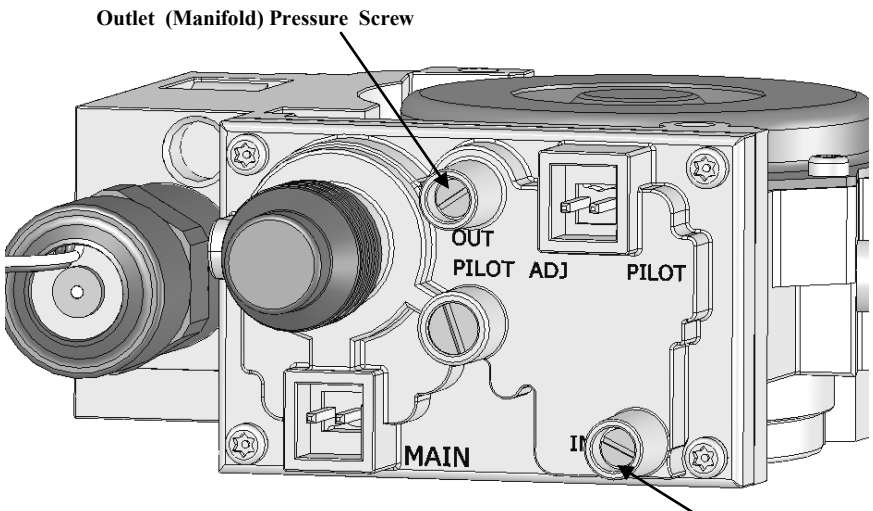

Figure 47a

ERROR CODES (PR-36-IPI only)

IGNITION SAFETY: Protection for Ignition System

Error Code: One beep every one second.

Description of Fault: Warns users if pilot is not successfully ignited in 60 seconds.

How to Clear: Press MODE button to OFF then to ON to re-attempt ignition.

What to Check:

- Ensure gas supply is turned on.
- Ensure black cap leads marked PILOT from module are plugged into PILOT connection on valve body.
- Verify lead from igniter on pilot assembly is connected to "I" terminal on main control module. (Clicking sound will also be heard).
- Verify lead from flame sensor on pilot assembly is connected to "S" terminal on main control module. (Pilot will light but main burner will not. Pilot will extinguish after 60 seconds and error code will alarm).
- Verify black ground lead is connected to tab extending from valve bracket.

SENSOR SAFETY: Protection for Flame Sensor

Error Code: Four beeps every one second.

Description of Fault: Warns users pilot flame senor detects a pilot flame already present when ignition sequence is initiated. This fault will also occur if pilot flame senor on main control module is shorted to ground.

How to Clear: Press MODE button to OFF then to ON to re-attempt ignition.

What to Check:

- Check if pilot flame is actually present when valve is turned OFF (if yes, replace valve).
- Replace pilot assembly.
- Replace module.

THERMAL SAFETY: Overheat Protection

Error Code: Four beeps every two seconds.

Description of Fault: Warns users that module's internal temperatures have exceeded 170˚ F (77˚C).

How to Clear: Module's internal temperatures must cool to below 160˚F (71˚C) and then press ON button.

What to Check:

- Are modules located in an unapproved location. Move to cooler location.

COMMUNICATION SAFETY: Protection for Ignition System

Error Code: One beep every four seconds.

Description of Fault: Warns users the hand held remote and main control module are not communicating properly. This safety feature is active in both manual and thermo modes. The remote control sends a communication safety signal every 15 minutes. If the main control module does not receive this signal, it begins a 2-hour countdown. If no communication safety signal is received at the end of this countdown, the system will enter communication safety shutdown which turns system OFF and emits the error code.

What to Check:

- Verify batteries in hand held remote control are new.
- Ensure remote control is located within 20 ft. (6 m) of main control module.
- Ensure remote control is not placed directly on top of or inside a metal enclosure as this can interfere with transmission.

FINALIZING THE INSTALLATION

FLAME APPEARANCE:

Flame appearance is affected by several factors including altitude, venting configuration and fuel quality. Although the venturi setting has been factory set, adjustments may be necessary for optimal performance and visual aesthetics.

When fireplace is first lit, the flames will be blue. Flames will gradually turn yellowish-orange during first 15 minutes of operation. If flames remain blue, or become dark orange with evidence of sooting (black tips), the burner tube venturi may need adjustment.

WARNING: BURNER TUBE ADJUSTABLE VENTURI POSITIONING SHOULD ONLY BE PERFORMED BY A QUALIFIED PROFESSIONAL SERVICE TECHNICIAN.

FACTORY SET BURNER TUBE VENTURI SETTINGS (ADJUST AS NECESSARY FOR YOUR INSTALLATION)		
	NATURAL GAS	LP (PROPANE) GAS
FRONT BURNER	1/8" (3mm) OPEN	1/8" (3mm) OPEN
BACK BURNER	5/8" (16mm) OPEN	5/8" (16mm) OPEN

BURNER TUBE VENTURI ADJUSTMENT GUIDELINES		
VENTURI POSITION	FLAME COLOR	VENTURI ADJUSTMENT
Closed too far	Dark orange flame with black tips	Open venturi setting slightly
Open too far	Blue flames	Close venturi setting slightly

NOTE If soot is present, check log positioning before adjusting burner venturi. Logs must not block burner ports.

IMPORTANT: SLIGHT ADJUSTMENTS TO BURNER VENTURI OPENING CREATE DRAMATIC RESULTS. ADJUST AT SLIGHT INCREMENTS UNTIL DESIRED LOOK IS ACHIEVED. ALWAYS BURN FIREPLACE FOR AT LEAST 15 MINUTES AND ALLOW TIME TO COOL BEFORE MAKING ANY FURTHER ADJUSTMENTS.

TO ADJUST BACK BURNER VENTURI:

WARNING: To avoid property damage or personal injury, allow fireplace time to cool before making any adjustments.

1. Remove set screw securing venturi wheel (located under firebox).
2. Moving handle towards #1 position closes venturi opening.
   Moving handle towards #9 position opens venturi opening.
3. Re-install set screw.
4. Light fireplace and wait 15 minutes before determining if any further adjustments are needed.

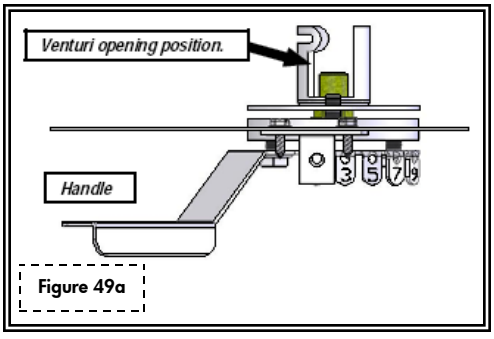

Figure 49a

TO ADJUST FRONT BURNER VENTURI:

1. Follow Control Board Removal instructions on page 29 to access and remove front burner assembly.
2. Loosen screw on venturi and adjust as necessary. Tighten screw.
3. Follow Control Board Installation instructions on page 30 to reinstall all components.

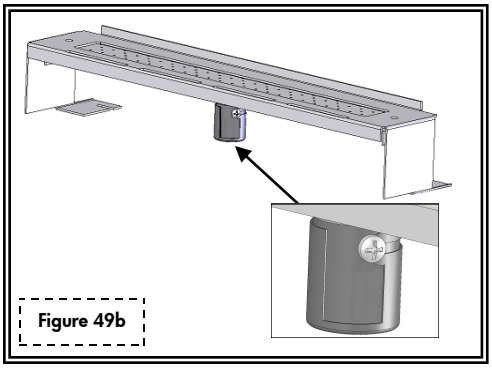
Figure 49b

FINALIZING THE INSTALLATION

RESTRICTOR USAGE:

Turn fireplace on and allow to burn for 15 minutes.
If flames indicate there is excessive draft (flickering, short flames), a restrictor may be necessary.
If flames indicate insufficient draft (lifting or ghosting flames), a previously installed restrictor may need to be modified or removed.

WARNING: TO AVOID PROPERTY DAMAGE OR PERSONAL INJURY, ALLOW FIREPLACE AMPLE TIME TO COOL BEFORE MAKING ANY ADJUSTMENTS AND / OR INSTALLATIONS.

RESTRICTOR TROUBLESHOOTING		
FLAME APPEARANCE	**DRAFT PROBLEM**	**RESTRICTOR SOLUTION**
Short, flickering	Excessive draft - not enough restriction	Add restrictor
Lifting or ghosting*	Insufficient draft - too much restriction	Remove inner ring (s) on restrictor or remove restrictor
* Improper venting installation may cause flames to lift or "ghost" - a dangerous situation. Inspect flames after installation to ensure proper performance. If determined that venting is correct, and the restrictor has been removed, yet flames are still lifting or ghosting, shut off gas supply to fireplace and call a qualified service technician.		

RESTRICTOR INSTALLATION / MODIFICATION (after termination completion):

If determined that a restrictor is needed or restrictor modification is required after termination is installed, access can be reached through fireplace baffle. Please remove logs, upper refractory clip and refractory to avoid damaging these components.

1. Remove (4) screws securing baffle. Remove baffle to expose venting.
2. Depending on your specific needs, determined by the chart above along with other factors, make necessary modifications.
3. If installation of a restrictor (included in fireplace components packet) is necessary, bend tabs on restrictor to approx. 80 degree angles to create tension when inserted into exhaust pipe on fireplace. Insert restrictor into 5" exhaust pipe with tabs pointing towards you.
4. If modification is necessary, remove restrictor by pulling it down and out of 5" exhaust pipe.
5. Reinstall baffle by resting baffle front above flange along inside top of firebox opening. Tip baffle back against rear firebox wall. Secure with (4) screws previously removed.
6. Reinstall refractory panels and log set.
7. Attach glass frame assembly and light fireplace. Wait 15 minutes before determining if any further modifications are necessary.

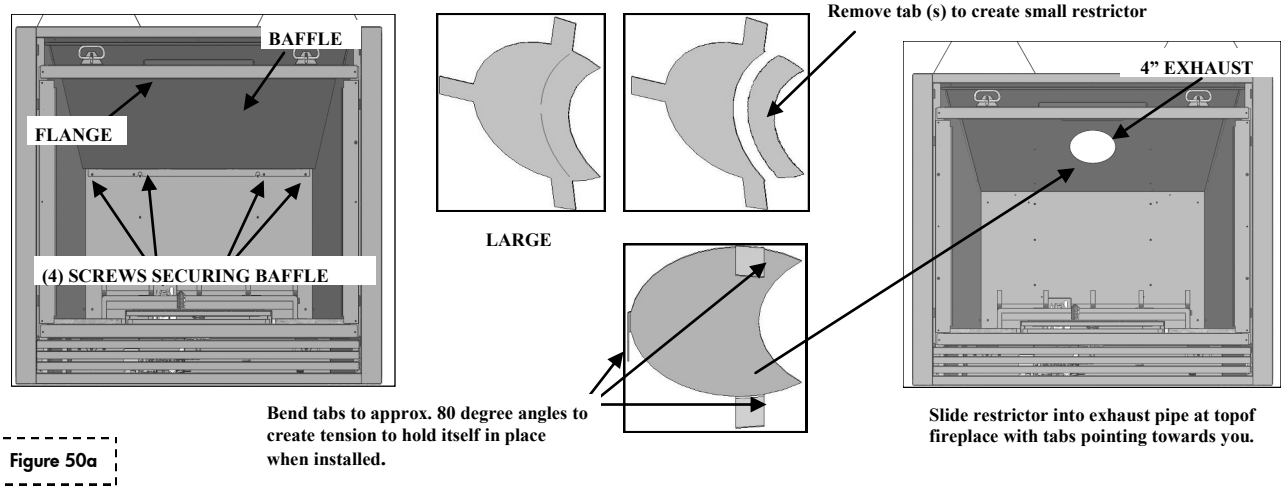

Figure 50a

HEAT DAMPER

This fireplace has been designed to operate with the damper fully open or completely closed depending on desired heat output without compromising flame appearance.

The damper is located at the inside top of firebox and can be viewed through the glass. The damper control is located under the firebox.

To reduce the amount of heat entering the room, raise damper control up and push into mounting slot. The damper is now in the fully open position and allows more heat to exit through the vent system.

If more heat is desired, pull handle out and down. The damper is now closed.

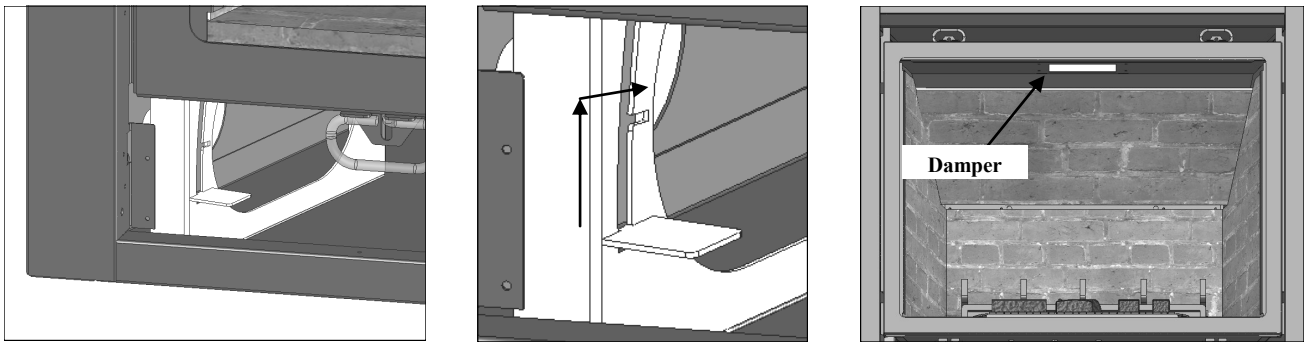

Figure 51a

MAINTENANCE

The appliance is required to be inspected at least once a year by a professional service person.

The compartment below firebox (behind lower grill) must be cleaned at least once a year, more frequent cleaning may be required due to excessive lint from carpeting, bedding materials, or other fibrous materials. It is imperative that the burner be cleaned once a year.

NOTE: INSTALLATION AND REPAIR SHOULD BE DONE ONLY BY QUALIFIED SERVICE PERSON. THE APPLIANCE SHOULD BE INSPECTED BEFORE USE AND ANNUALLY BY A QUALIFIED SERVICE PERSON. MORE FREQUENT CLEANING MAY BE REQUIRED DUE TO EXCESSIVE LINT FROM CARPETING, BEDDING MATERIALS, ETC. IT IS IMPERATIVE THAT CONTROL COMPARTMENTS, BURNERS AND CIRCULATION AIR PASSAGEWAYS OF THE APPLIANCE BE KEPT CLEAN.

CONTROL BOARD SYSTEM

- **Annual cleaning of burner system is required.**
- **The burner assembly may be removed for easier access. Refer to pages 29-30 in this installation manual for complete instruction on removing & reinstalling burner assembly.**
- **Visually check for blocked port holes, especially near the pilot. Blocked port holes may cause delayed ignition.**
- **Reinstall burner assembly following instructions on page 30 of this installation manual.**
- **Visually check pilot light and burner when in operation. Flames should be steady, not lifting or floating.**

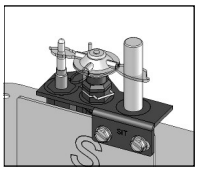

PR-36 Pilot

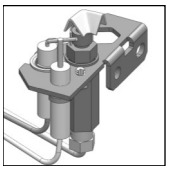

PR-36-IPI Pilot

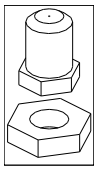

Burner Orifice

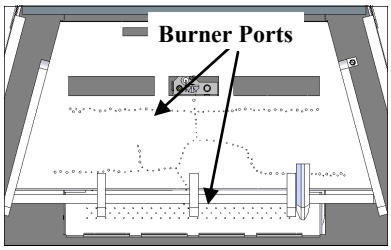

Figure 52a

FAN

The fan should be disconnected from electrical current, and cleaned (vacuumed) every six months. The bearings are sealed and require no oiling.

VENT SYSTEM

Annual examination of venting system by a qualified agency is required.

IF VENT-AIR INTAKE SYSTEM IS DISASSEMBLED FOR ANY REASON, RE-INSTALL PER INSTRUCTIONS PROVIDED WITH INITIAL INSTALLATION.

The flow of combustion and ventilation air must not be obstructed.

GLASS CLEANING & REPLACEMENT

- **Clean glass only when cool and only with non-abrasive cleansers.**
- **Do not operate this fireplace with glass/frame assembly removed, cracked or broken.**
- **The glass assembly, part #PRC-057T, shall only be replaced as a complete unit, as supplied by Hussong Mfg. Co., Inc.**
- **Replacement of glass & frame assembly, part #MTK-057T, must only be performed by a licensed or qualified service person. DO NOT SUBSTITUTE MATERIALS.**
- **Do not strike or slam glass door assembly.**

IMPORTANT: ANY SAFETY SCREEN OR GUARD REMOVED FOR SERVICING MUST BE REPLACED PRIOR TO OPERATING THE APPLIANCE.

CAUTION: LABEL ALL WIRES PRIOR TO DISCONNECTION WHEN SERVICING CONTROLS. WIRING ERRORS CAN CAUSE IMPROPER AND DANGEROUS OPERATION. VERIFY PROPER OPERATION AFTER SERVICING.

CAUTION: KEEP APPLIANCE AREA CLEAR OF COMBUSTIBLE MATERIALS, SUCH AS GASOLINE AND OTHER FLAMMABLE VAPORS AND LIQUIDS.

TROUBLESHOOTING (PR-36 only)

CAUTION: THE FOLLOWING MUST BE PERFORMED BY A QUALIFIED TECHNICIAN

NO SPARK FROM ELECTRODE TO PILOT WHEN PIEZO BUTTON IS TRIGGERED.

A. Check wiring at back of piezo for proper connection.

B. Check wiring at electrode for proper connection.

C. Check position of electrode (1/8" (3 mm) between electrode and pilot). Readjust if necessary.

D. Look for arc below electrode and along electrode wire. Direct metal contact may cause an arc below electrode.

SPARK IGNITER WILL NOT LIGHT AFTER REPEATED TRIGGERING OF PIEZO BUTTON.

A. No gas or low gas pressure.

- ♦ Check remote shut off valves from fireplace. Usually there is a valve near the main. There may be more than (1) valve between the fireplace and the main.
- ♦ Low gas pressure can be caused by several situations such as a bent line, too narrow diameter pipe, or low line pressure. Consult with plumber or gas supplier.

B. No LP in tank.

- ♦ Check LP (propane) tank. Refill if necessary.

PILOT WILL NOT STAY LIT AFTER CAREFULLY FOLLOWING LIGHTING INSTRUCTIONS.

A. Check that pilot flame impinges on thermocouple. Clean and/or adjust pilot for maximum flame impingement.

B. Ensure thermocouple connection at gas valve is fully inserted and tight (hand tight plus 1/4 turn).

C. Thermocouple reading below 15 millivolts.

- ♦ Disconnect thermocouple from valve, place one millivolt meter lead wire on end of thermocouple and other millivolt meter lead wire on thermocouple's copper wire. Start pilot while holding valve knob in. If millivolt reading is less than 15 millivolts, replace thermocouple.

D. Thermopile not generating sufficient millivolts.

- ♦ Pilot flame must be enveloping thermopile. Adjust pilot flame if necessary.
- ♦ Check thermopile wire connections at valve. Tighten if necessary.
- ♦ Check thermopile with millivolt meter. Turn remote / thermostat / wall switch or ON/OFF switch to OFF. Turn valve knob to PILOT position (pilot should remain lit). Take reading at THTP & TP terminals on gas valve. Reading should be 350 millivolts minimum. Replace thermopile if reading falls below specified minimum.

TROUBLESHOOTING (PR-36 only)

BURNER WILL NOT LIGHT

A. Gas control knob not turned to 'ON'.

B. 'ON'/'OFF' switch not turned on.

C. Remote, wall switch or thermostat not turned 'ON'.

D. Plugged main burner orifice.

E. Remote, wall switch, thermostat or 'ON/ OFF' switch wires defective.

- ♦ Check wires for proper connections. Place jumper wires across terminal at switch. If burner lights, replace defective switch.
- ♦ If switch checks ok, place jumper wires across switch wires on gas valve. If burner lights, wires are faulty or connections are bad.

FREQUENT PILOT OUTAGES

A. Pilot shield not installed.

B. Pilot flame too high or too low, causing pilot safety to drop out.

- ♦ Clean and adjust flame for maximum flame impingement on thermopile.

BURNER WON'T STAY LIT

A. Thermopile wires loose at valve terminals.

- ♦ Tighten if necessary.

B. Thermopile wires ground out due to pinched wires.

- ♦ Free pinched wires if necessary.

C Refractory panel placement (if installed).

- ♦ Refractory panels must be tight against firebox walls. It may be necessary to secure panels with high-temp sealant, especially around intake duct.

MORE PR-36 TROUBLESHOOTING ON FOLLOWING PAGE

TROUBLESHOOTING (PR-36 only)

PILOT AND BURNER EXTINGUISH WHILE IN OPERATION

A. No LP (propane) in tank.

♦ Check tank and refill if necessary.

B. Glass frame assembly not installed correctly.

♦ Refer to page 14 in this manual for proper glass frame assembly installment instructions.

C. Defective thermopile or thermocouple.

♦ Check thermopile and thermocouple for proper millivolts.

D. Improper pitch on horizontal vent.

♦ 1/4" (6 mm) rise per foot is required on horizontal venting.

E. Inner vent pipe leaking exhaust gases back into firebox.

♦ Check for leaks. Repair if necessary.

F. Improper vent cap installation.

♦ Check for proper vent cap installation. Maximum downward slope of horizontal vent cap is 1/4" (6 mm). Adjust if necessary.

♦ Check vent cap for blockage. Remove debris if necessary.

G. Excessive draft.

GLASS SOOTING

A. Improper log placement.

♦ Refer to log placement instructions on pages 29-30 of this installation manual.

B. Improper venturi setting.

♦ Venturi may need to be opened slightly to allow more air into the gas mix.

C. Improper pitch on horizontal venting.

♦ 1/4" (6 mm) rise per foot is required on horizontal venting.

FLAME BURNS BLUE AND LIFTS OFF BURNER

A. Improper Venturi setting.

♦ Venturi may need to be closed slightly.

B. Improper vent cap installation.

♦ Check for proper vent cap installation.

C. Blockage or vent system leaks.

TROUBLESHOOTING (PR-36-IPI only)

MAIN CONTROL MODULE WILL NOT LEARN TRANSMITTER

- Ensure REMOTE/OFF switch on side of main control module is set to REMOTE.
- Make sure batteries in both the hand held remote and backup battery pack are installed in the proper direction and are not drained.
- Verify hand held remote indicates a signal is being sent. The LCD display should indicate ON or OFF depending on which button is being pressed. The LED indicator should illuminate on wall transmitters and on/off transmitters. Buttons should be pressed and held for 1 to 2 seconds to ensure a complete signal is sent.
- Ensure 4-pin lead-set is securely connected from battery pack to main control module's AUX connection. If the A/C adapter is used, check that leads from adapter are securely connected to POWER terminals on main control module.
- Press and hold LEARN button on main control module for approximately 10 seconds to clear memory (you should hear a series of beeps from the receiver), immediately press either the ON or OFF button on hand held remote (you should hear a series of beeps indicating the transmitter code has been learned).

PILOT WILL NOT LIGHT / STAY LIT

- Verify gas supply is turned on.
- Verify main control module is receiving signal from hand held remote by listening for a beep from receiver when ON is pressed on hand held remote. If you do not hear a beep, ensure main control module has learned the hand held remote. (See above).
- Ensure black lead from pilot assembly igniter is securely connected to terminal labeled "I" and red lead from flame rectification sensor is securely connected terminal labeled "S" on main control module.
- Ensure black cap leads marked PILOT from main control module are securely connected to terminals labeled PILOT on valve body.
- Ensure black GROUND wire is securely connected to tab located next to ON/OFF toggle switch. **A proper ground is essential to spark igniter operation.**
- Make sure pilot flame is in contact with flame rectification sensor on pilot assembly. This valve is equipped with a pilot flame adjustment screw. If pilot flame is too small it will not contact flame rectification sensor and will not complete the safety circuit.
- Check continuity of pilot on valve. Remove wire connector. If there is no continuity on pin terminals, replace valve.

PILOT FLAME ALWAYS ON / WILL NOT EXTINGUISH

- Ensure continuous pilot icon is not present in LCD screen. If icon is present, press PILOT button. This will de-activate the continuous pilot feature and the icon will disappear from LCD screen.

PILOT BURNING BUT IGNITOR CONTINUES TO SPARK

- Check that flame sensor is fully impinged by pilot flame. If needed, adjust pilot.
- Check end-to-end continuity of sensor. If sensor has continuity, replace module.

TROUBLESHOOTING PR-36-IPI only cont.)

MAIN FLAME WILL NOT LIGHT

- Verify gas supply is turned on.
- Ensure pilot flame will ignite. If not, see pilot flame troubleshooting on previous page.
- Make sure white cap leads marked MAIN from module are securely connected to terminals marked MAIN on valve body.
- Make certain pilot flame is in contact with flame rectification sensor on pilot assembly. This valve is equipped with a pilot flame adjustment screw. If pilot flame is too small it will not contact flame rectification sensor and will not complete the safety circuit.
- Ensure pilot flame is properly located to ignite main flame.
- Does hand held remote show CP in the display? If yes, childproof is on. De-activate by pushing PROG/TIME & UP keys at same time for more than 5 seconds.
- Check continuity of main burner coil on gas valve. Remove wire connector. If there is no continuity on pin terminals, replace valve.

FLAME HEIGHT ADJUSTMENT NOT WORKING / WORKS BACKWARDS

- Ensure black and red leads from battery pack or module are securely connected to red and black leads from motor drive located on valve body (red to red, black to black).
- Check functionality with all transmitters to determine if there is an issue with the main control system or an individual transmitter. If the issue is with an individual transmitter, make sure batteries in hand held remote and backup battery pack are installed properly and are not drained.

ROOM TEMP. DISPLAYED ON HANDHELD REMOTE NOT CORRECT

- Ensure transmitter was not recently stored in a different location (air-conditioned, heated) from that in which the hand held remote was tested. It may take up to 3 hours for the temperature inside a packaged transmitter, and several minutes for an unpackaged transmitter to equalize with room temperature.

FIREPLACE WILL NOT RESPOND IN “THERMO” MODE

- Ensure hand held remote is within 20 ft. (6.096 m) operational range.
- Make sure an ON or OFF command was not last sent from another transmitter. These commands will override thermal commands from the handheld remote control. To return system to THERMO mode, press either ON or OFF on hand held remote, then press MODE button to put system in THERMO mode. Press and hold SET button to change set temperature.
- Verify set temperature on hand held remote is at least 2˚F (1˚C) above or below room temperature. The system will not react to temperatures within 2˚F (1˚C) of set temperature.

CONVERSION KIT INSTRUCTIONS (PR-36 units only)

#OCK-S3755B NAT GAS CONVERSION KIT / #OCK-S5271A LP GAS CONVERSION KIT
EQUIPPED WITH SIT GAS VALVE & PILOT ASSEMBLY

WARNING: This conversion kit shall be installed by a qualified service agency in accordance with the manufacturers instructions and all applicable codes and requirements of the authority having jurisdiction. If the information in these instructions is not followed exactly, a fire, explosion or production of carbon monoxide may result, causing property damage, personal injury or loss of life. The qualified service agency is responsible for proper installation of this kit. The installation is not proper and complete until operation of the converted appliance is checked as specified in the instructions supplied with the kit. Refer to appliance owner's manual or product data plate for proper inlet and manifold pressure adjustments and orifice sizing.

Kit includes: (2) Burner Orifices: NAT #37 & #55 / LP #52 & #71
(1) HI/LO Regulator and Instruction Sheet
(1) Baffle Shield and (3) screws - NAT only
(1) Pilot Injector
(1ea.) Valve and Pilot Assembly Conversion Instructions
(1) Gas Conversion Label
(1) Gas Label

WARNING: SHUT OFF GAS SUPPLY BEFORE DISCONNECTING ANY ELECTRICAL POWER.

PREPARE FIREPLACE:

1. Turn fireplace off by pushing in and turning gas control knob clockwise to OFF position.
2. Remove upper hood, upper louver and glass assembly*.
3. Remove logs and ember refractory from fireplace.
4. Remove light cylinders, amber light filters and halogen bulbs (if installed).
5. Remove pilot shield.
6. Remove burner / log grate assemblies from fireplace.

REPLACE BURNER ORIFICES:

1. Remove existing orifice caps and replace with orifice caps included with this kit, placing orifice with small hole at the front of fireplace and orifice with large hole at the back. Tighten caps securely.

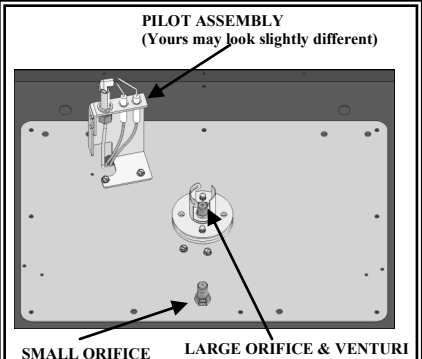

Figure 58a

CONVERT PILOT ASSEMBLY:

1. Follow instruction sheet included with kit to convert pilot to either Nat. or LP.

CONVERT GAS VALVE:

1. Follow instructions included with kit to convert gas valve to either Nat. or LP.

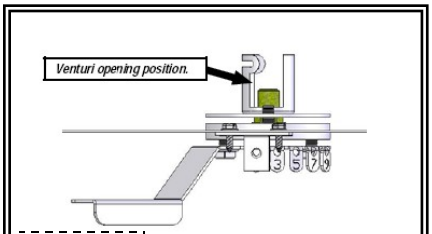

Figure 58b

COMPLETE THE CONVERSION:

1. Adjust front burner venturi setting by loosening screw, adjusting cap and retightening screw. **CORRECT SETTINGS: NAT. : 1/8" (3mm) open**
   L.P. : 5/8" (16mm) open
2. Re-install burner assemblies into fireplace, checking to ensure burner venturis are properly seated over burner orifices.
3. Remove set screw from venturi wheel located under board. Move handle to correct position. Secure with screw previously removed. **NAT: #9 POSITION**
   LP: #1 POSITION
   Note: Venturi may need further adjustment, depending on your venting configuration.
4. Adjust combustion air intake shield*.
5. **IF CONVERTING TO LP GAS:** Remove baffle shield.
   IF CONVERTING TO NAT. GAS: Install baffle shield included with kit.
6. Re-install pilot shield.
7. Reinstall any light kit components if previously removed.
8. Re-install ember refractory and logs*.

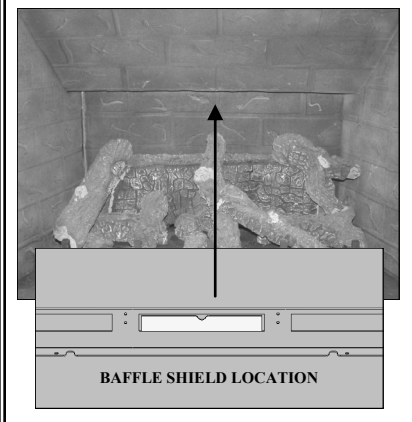

Figure 58c

CONVERSION KIT INSTRUCTIONS (PR-36 units only)

COMPLETE THE CONVERSION:

9. Light pilot and turn burner on*.

10. Test both inlet and manifold pressures*.

11. Visually check for leaks at all connections, whether field or factory made. check pilot flame. Flame should envelope top of thermocouple and thermopile 3/8" (10 mm) to 1/2" (13 mm), and extend onto burner far enough for proper ignition.

    To Adjust pilot: Remove pilot adjustment screw from gas valve. Turn inner pilot adjustment screw clockwise to decrease or counter-clockwise to increase pilot flame. Re-install pilot adjustment screw cover and tighten.

12. Turn burner and pilot off.

13. Affix Gas sticker over existing label on metal tag.

14. Re-install glass frame assembly, upper louver and upper hood*.

15. Verify proper ignition and operation of fireplace.

16. Complete and affix 'Gas Conversion' label behind lower grill.

*** REFER TO FIREPLACE INSTALLATION MANUAL IF NECESSARY.**

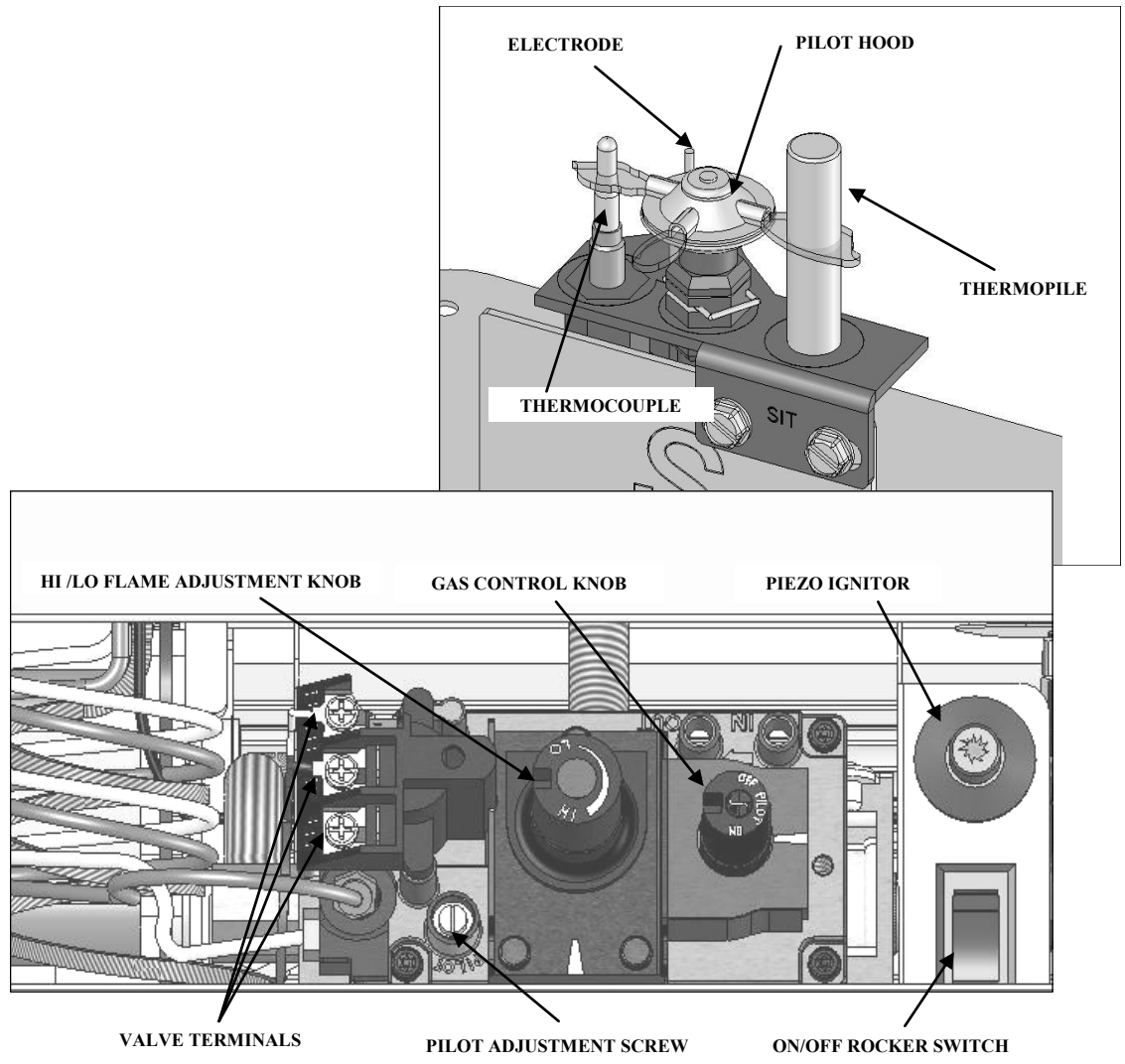

Figure 59a

CONVERSION KIT INSTRUCTIONS (PR-36-IPI units only)

#OCK-A3755N-I-PRC-PSE NAT GAS CONVERSION KIT / #OCK-A5271L-I-PRC-IPI LP GAS CONVERSION KIT

WARNING: This conversion kit shall be installed by a qualified service agency in accordance with the manufacturers instructions and all applicable codes and requirements of the authority having jurisdiction. If the information in these instructions is not followed exactly, a fire, explosion or production of carbon monoxide may result, causing property damage, personal injury or loss of life. The qualified service agency is responsible for proper installation of this kit. The installation is not proper and complete until operation of the converted appliance is checked as specified in the instructions supplied with the kit. Refer to appliance owner's manual or product data plate for proper inlet and manifold pressure adjustments and orifice sizing.

Kit includes:
- (1) Gas Conversion Label
- (1) Gas Label
- (1) Low Limit Screw: NAT #37 / LP #54
- (2) Burner Orifices: NAT #37 & #55 / LP #52 & #71
- (1) Pilot Orifice: NAT #.018 / LP #.012
- (1) Baffle Shield and (3) screws - NAT only

WARNING: SHUT OFF GAS SUPPLY AND ELECTRICAL POWER TO FIREPLACE.
SHUT OFF GAS SUPPLY BEFORE DISCONNECTING ELECTRICAL POWER.

PREPARE THE FIREPLACE:

1. Remove upper hood, upper louver and glass assembly*.
2. Remove logs and ember refractory from fireplace*.
3. Remove pilot shield*.
4. Remove light kit cylinders, amber light filters, and halogen bulbs if previously installed.
5. Remove burner / log grate assemblies from fireplace*.

REPLACE BURNER ORIFICE:

Remove existing orifice caps and replace with orifice caps included with kit, placing orifice with small hole at the front of fireplace and orifice with large hole at the back. Tighten caps securely.

CONVERT PILOT ASSEMBLY:

1. Remove (2) screws securing pilot assembly to pilot bracket. Place 7/16" wrench on upper fitting and 1/2" wrench onto lower fitting, turn pilot hood nut counter-clockwise to remove pilot hood.
2. Remove pilot orifice located inside lower fitting and replace with one included with kit.
3. Re-attach pilot hood. Tighten with wrenches, making sure pilot hood is positioned as shown in Figure 12d. Final alignment of sensor and hood outlet is critical for proper ignition.
4. Attach pilot assembly to pilot bracket with screws previously removed.

GAS TYPE CONVERSION:

Press and hold Learn Button on Main Control Module for 20 seconds. A beep will be heard letting you know the procedure has been completed.

If converting from NAT to LP gas: one (1) second long beep

If converting from LP to Nat gas: three (3) second long beep

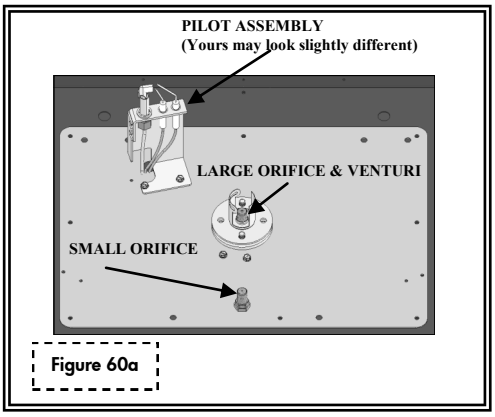

Figure 60a

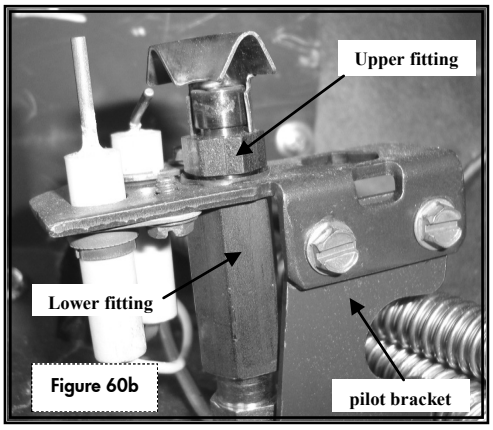

Figure 60b

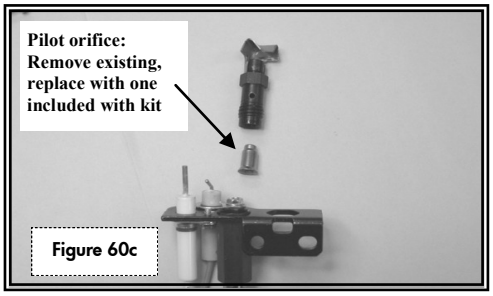

Figure 60c

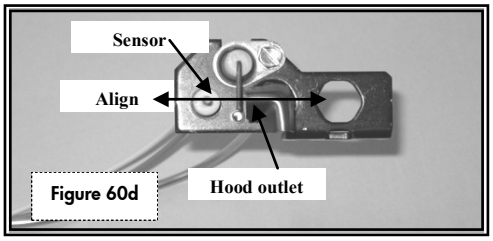

Figure 60d

CONVERSION KIT INSTRUCTIONS (PR-36-IPI units only)

CONVERT GAS CONTROL VALVE:

1. Remove cap covering the pressure regulator.
2. Press down on pressure regulator tube and rotate 90˚. The shaft will pop out and point to chosen gas type. Re-attach cap.
3. Remove existing low limit screw (located above valve motor, see page 38). Replace with one included with kit.

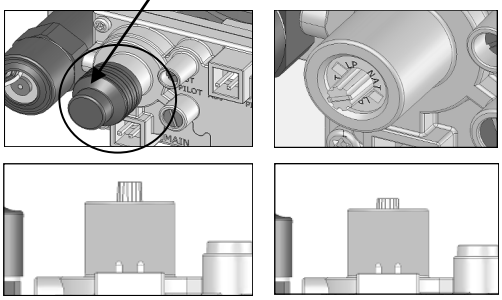

Figure 61a

COMPLETE THE CONVERSION:

1. Adjust front burner venturi setting by loosening screw, adjusting cap and retightening screw. **NAT.: 1/8" (3mm) open / L.P.: 5/8" (16mm) open**
2. Re-install burner assemblies into fireplace, checking to ensure burner venturis are properly seated over burner orifices.
3. Remove set screw from venturi wheel located under board. Move handle to correct position. Secure with screw previously removed.
   NAT: #9 POSITION / LP: #1 POSITION
   Venturi may need further adjustment, depending on venting configuration.
4. Adjust combustion air intake shield*.
5. **IF CONVERTING TO LP GAS:** Remove baffle shield.
   IF CONVERTING TO NAT GAS: Install baffle shield included with kit
6. Re-install pilot shield.
7. Reinstall any light kit components if previously removed.
8. Re-install ember refractory and logs*.
9. Turn on gas and electrical supplies.
10. Light fireplace*. Check for leaks at all connections, whether field or factory made.
11. Test inlet pressure*.
12. Visually check pilot flame. Flame should envelope top of flame sensor and extend onto burner far enough for proper ignition.
    To Adjust Pilot: Turn pilot adjustment screw clockwise to decrease or counter-clockwise to increase pilot flame.
13. Turn fireplace off.
14. Affix gas type sticker to existing label.
15. Reinstall glass frame assembly, upper louver and upper hood*.
16. Complete and affix 'Gas Conversion" label behind lower grill.

***REFER TO FIREPLACE INSTALLATION MANUAL IF NECESSARY.**

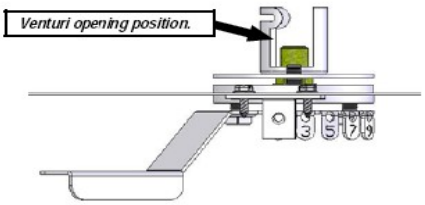

Figure 61b

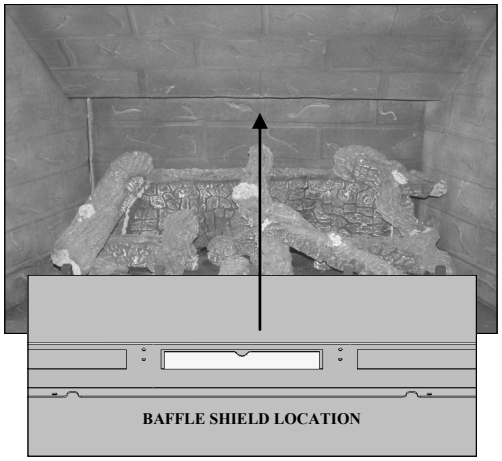

Figure 61c

Fireplace Model No.:_____

This appliance and control was converted on_____

To_____ gas with Kit No._____ by:

Company:_____

Address:_____

Which accepts responsibility that this conversion has been properly made.

Minimum / Maximum inlet pressures: Refer to Rating Plate.

Manifold Pressure: Refer to Rating Plate.

Orifice size:_____ Input Rating:_____ BTU

GAS CONVERSION LABEL (included with conversion kit)

Figure 61d

REPLACEMENT PARTS LIST

Replacement parts are available through your local dealer. Contact them for availability and pricing.

PRC-36 MILLIVOLT BOARD AND PARTS			
PRC-770	Millivolt Control Board - Nat Gas	700-098	Pilot Hood
PRC-771	Millivolt Control Board - LP Gas	700-203	Manual Shut-off Valve
700-023	On/Off Rocker Switch	700-213	18" Flexible Gas Line-Black
700-086N	S.I.T. Valve - Natural Gas	700-226	Flexible Gas Line-Valve to Burner Connection
700-087	S.I.T. Valve - LP Gas	700-255	Natural Gas Orifice #55 - front burner
700-088	Pilot / Generator / Thermocouple - Nat Gas	700-237	NAT Gas Orifice #37 - back burner
700-089	Pilot / Generator / Thermocouple - LP Gas	700-271	LP Gas Orifice #71 - front burner
700-090	Piezo Igniter w/ Nut (no wire)	700-252	LP Gas Orifice #52 - back burner
700-099	Flexible Pilot Tubing (Valve to Pilot)	OCK-S3755B	Natural Gas Conversion Kit
700-092	Millivolt Generator	OCK-S5271A	LP Gas Conversion Kit
700-093	Thermocouple	PRC-135	Burner / Log Grate Assembly
700-094	#30 Pilot Orifice - Natural Gas	PRC-043	Pilot Shield
700-095	#35 Pilot Orifice - LP Gas		

PR-36-IPI BOARD SYSTEM AND PARTS			
PRC-600-IPI	IPI Control Board - Nat Gas	700-203	Manual Shut-off Valve
PRC-601-IPI	IPI Control Board - LP Gas	700-213	18" Flexible Gas Line-Black
700-400-06	Main Control Module	700-226	Flexible Gas Line-Valve to Burner Connection
700-404-PRC	IPI Valve - Natural Gas	700-255	Natural Gas Orifice #55 - front burner
700-404-PRC-1	IPI Valve - LP Gas	700-234	NAT Gas Orifice #37 - back burner
700-200	Pilot Assembly - Natural Gas	700-268	LP Gas Orifice #71 - front burner
700-200-1	Pilot Assembly - LP Gas	700-251	LP Gas Orifice #52 - back burner
700-800	8-PIN Primary Wire Harness: Primary Wire Harness	OCK-A3755N-I-PRC-PSE	Natural Gas Conversion Kit
700-500	5-PIN Wire Harness: Main Module to Valve Step Motor	OCK-A5271L-I-PRC-PSE	LP Gas Conversion Kit
700-120	Extension Module	PRC-135	Burner / Log Grate Assembly
700-401	4-PIN Wire Harness: Control Module to Extension Module	PRC-043	Pilot Shield
700-750	7.5 Volt Adaptor	700-337	NAT. Low Limit Screw #37
700-208	IPI Remote Control	700-354	LP Low Limit Screw #54
700-164	#.018 IPI NAT. Gas Pilot Orifice	700-752	Pilot Igniter (with wire)
700-165	#.012 IPI LP Gas Pilot Orifice	700-753	Pilot Flame Sensor (with wire)
700-751	Battery Back-up with (4) AA Batteries	700-403	Step Motor

GRILL REPLACEMENT	
PRC-200	Upper Hood
PRC-201	Lower Grill
PRC-200L	Upper Hood Louver

GLASS & GLASS GASKET	
PRC-005	Replacement Valance
900-006	1-1/8" Glass Gasket w/ Adhesive
PRC-057T	Valance with 24-3/4" x 30-1/2" glass

FAN ASSEMBLIES	
TRF-028	Fan Assembly (55345 only)
IPI-028	Fan Assembly (55345-IPI only)

REFRACTORY PANELS	
PRC-H900	(3 pc.) Refractory Panel Set
PRC-H901	Bottom Refractory Panel
PRC-H900S	Side Refractory (1 pc.)
PRC-H900E	Ember / Log Refractory
PRC-H902	Top Refractory Panel
PRC-H900B	Back Refractory Panel

COMBUSTIBLE MATERIAL BACKER BOARD	
PRC-FPS	FirePro Standoff

LOG SET	
PRC-500	Log Set
PRC-1	#1 Log
PRC-2	#2 Log
PRC-3	#3 Log
PRC-4	#4 Log
PRC-5	#5 Log
PRC-6	#6 Log
PRC-7	#7 Log
PRC-8	#8 Log
PRC-9	#9 Log
900-KLK	Klinkers
900-REMB	Rock Wool Embers

**Consult your dealer for information on optional accessories available for this fireplace.*

This appliance tested & certified by:
OMNI - Test Laboratories, Inc.
13327 NE Airport Way
Portland, Oregon 97230

Model #PR-36 Princeton
Model #PR-36-IPI Princeton IPI

www.kozyheat.com

Manufactured by:

Hussong Mfg. Co., Inc.
204 Industrial Park Drive
Lakefield, Minnesota 56150
507-662-6641

LIMITED WARRANTY

KOZY HEAT
LIMITED 10 YEAR WARRANTY

Effective July 01, 2003

This Limited 10 Year Warranty will not become effective until the warranty registration form has been completed and mailed to Hussong Manufacturing Co., Inc., P.O. Box 577, Lakefield, MN 56150. This registration form must be received within 30 days of installation. Failure to do so may result in delayed warranty coverage and submission of proof of purchase will be required.

Hussong Manufacturing Co., Inc. warranties to the original purchaser of this Kozy Heat Fireplace, that it is free of defects in materials and workmanship at the time of manufacture.

Subject to the following conditions & requirements, Hussong Manufacturing Co., Inc. extends the following limited warranty under normal use and service, with respect to the Kozy Heat line of gas burning fireplaces.

YEAR 1: Subject to the conditions & requirements listed below, within the first year from date of purchase, Hussong Manufacturing Co., Inc. shall, at its discretion, replace or repair any such defect in material or workmanship, at Hussong Manufacturing Co., Inc.'s expense, including reasonable labor costs to repair or replace the defective component, if a factory pre-authorization is given for the repair.

YEARS 2 - 10: Subject to the conditions & requirements listed below, beginning with the first day of the second year and continuing through the tenth year, Hussong Manufacturing Co., Inc., will at its discretion, provide repair or replacement parts at current list prices for any defect in material or workmanship of components, including optional components and accessories (if available). Hussong Manufacturing Co., Inc. shall not be responsible for any installation, labor, transportation or other indirect costs.

LIMITATION OF LIABILITY

To make a claim under this warranty, the purchaser must first contact the dealer/installer from whom the fireplace was purchased.

This limited warranty will be void if the fireplace is not installed by a qualified installer and according to the installation instructions. Use of unauthorized components will make this warranty null and void.

This limited warranty also is void if the fireplace is not operated, at all times, according to the operating instructions furnished.

This warranty is limited to defects in material and workmanship. It does not apply to any product that has been subject to negligence, misapplication, improper installation. Remote control warranties are covered by Ambient Technologies, Inc., and are excluded from this Limited Warranty.

No person is authorized to extend the time of this warranty or to accept on Hussong Manufacturing Co., Inc.'s behalf any additional obligation of liability connected with the unit.

It is expressly agreed and understood that this warranty is Hussong Manufacturing Co., Inc.'s sole obligation and purchaser's exclusive remedy for defective fireplace equipment. Hussong Manufacturing Co., Inc. shall not be liable for any consequential, incidental or contingent damages whatsoever. The foregoing warranty is exclusive and in lieu of all other expressed warranties. Hussong Manufacturing Co., Inc. shall not be held to implied warranties, including but not limited to the implied warranties or merchantability and fitness for a particular purpose. This warranty replaces all previous warranty policies.

Some states do not allow the exclusion or limitation of incidental or consequential damages or limitations on how long an implied warranty lasts, so the above limitations or exclusions may not apply to you. This warranty gives you specific legal rights and you may also have other rights which vary from state to state.

Hussong Manufacturing Co., Inc. reserves the right to make changes at any time, without notice, in design, material, specifications and prices. Hussong Manufacturing Co., Inc. reserves the right to discontinue models and products.

WARRANTY CONDITIONS & REQUIREMENTS:

1. You are the original purchaser. This warranty is not transferable.
2. Installation of the fireplace is performed by a qualified installer.
3. Installation and operation must comply with installation and operation instructions.
4. Paint and glass gaskets are covered for 30 days from date of purchase.
5. Components broken, (including glass panels), during shipping, careless handling of components, or defects resulting from improper installation, misuse of the fireplace and components are not covered under this warranty.
6. This warranty does not cover any part of the fireplace or any components which have been exposed to or submerged under water.
7. Hussong Manufacturing Co., Inc. must be notified by the dealer the fireplace was purchased from or a qualified installer or service technician of the defect.
8. Annual service of the fireplace as required in the installation manual, is performed by a qualified installer/service technician. (Copies of such service records may be required to claim a warranty.)
9. All previous warranty/service has been performed by a qualified installer or service technician. (Copies of such service records may be required to claim a warranty.)

LIFETIME WARRANTY

KOZY HEAT FIREPLACES

LIFETIME WARRANTY

THIS LIFETIME WARRANTY COVERAGE WILL BE EXTENDED AS DESCRIBED BELOW PROVIDED ALL WARRANTY CONDITIONS AND REQUIREMENTS ARE MET AS OUTLINED IN THE 10 YEAR LIMITED WARRANTY POLICY.

LIFETIME WARRANTY COVERAGE

LIFETIME WARRANTY IS EXTENDED AS FOLLOWS: Hussong Manufacturing warranties to the original purchaser that the firebox, heat exchanger, fiber logs, burner tube and glass of this Kozy Heat fireplace will not be defective in material or workmanship under normal use and service for as long as you own this product. If any of these components fail due to defects in material or workmanship under normal use and service, Hussong Manufacturing Co., Inc. will, at its sole discretion, repair or replace the defective component. This LIFETIME WARRANTY does not cover any installation, labor, transportation or other indirect costs arising from defective components.

LIMITATION OF LIABILITY

This Lifetime warranty will be void if the fireplace is not installed by a qualified installer and according to the installation instructions. Use of unauthorized components will make this warranty null and void. This lifetime warranty also is void if the fireplace is not operated, at all times, according to the operating instructions furnished. This warranty is limited to defects in material and workmanship of components specified. It does not apply to any product that has been subject to negligence, misapplication, improper installation.

No person is authorized to extend the time of this Lifetime warranty or to accept on Hussong Manufacturing Co., Inc.'s behalf any additional obligation of liability connected with the unit.

Hussong Manufacturing Co., Inc. may fully discharge all obligations with respect to this Lifetime warranty by refunding the wholesale price of the defective component(s).

It is expressly agreed and understood that this Lifetime warranty is Hussong Manufacturing Co., Inc.'s sole obligation and original purchaser's exclusive remedy for defective fireplace equipment. Hussong Manufacturing Co., Inc. shall not be liable for any consequential, incidental or contingent damages whatsoever other than those incurred by Hussong Manufacturing Co., Inc. to repair or replace the defective component. The foregoing warranty is exclusive and in lieu of all other expressed warranties. Hussong Manufacturing Co., Inc. shall not be held to implied warranties, including but not limited to the implied warranties or merchantability and fitness for a particular purpose. This lifetime warranty replaces all previous lifetime warranty policies.

Hussong Manufacturing Co., Inc. reserves the right to make changes at any time, without notice, in design, material, specifications and prices. Hussong Manufacturing Co., Inc. reserves the right to discontinue models and products.

JUNE 1998

(CUT ALONG DOTTED LINE)

TO ACTIVATE THIS LIFETIME WARRANTY COVERAGE, THIS REGISTRATION CARD MUST BE COMPLETED AND MAILED WITH YOUR COMPLETED 10 YEAR LIMITED WARRANTY FORM WITHIN 30 DAYS OF INSTALLATION.

PURCHASER'S NAME: _____ **INSTALLATION DATE:** _____

ADDRESS: _____ **MODEL#:** _____ **SERIAL #:** _____

_____ **TELEPHONE #** _____

INSTALLER NAME: _____

ADDRESS: _____ **TELEPHONE #** _____

_____