KOZY HEAT™

INSTALLATION & OPERATING MANUAL

#942 DIRECT VENT

DESIGN-CERTIFIED TO:

DECORATIVE & WALL FURNACE ANSI PERFORMANCE & SAFETY STANDARDS

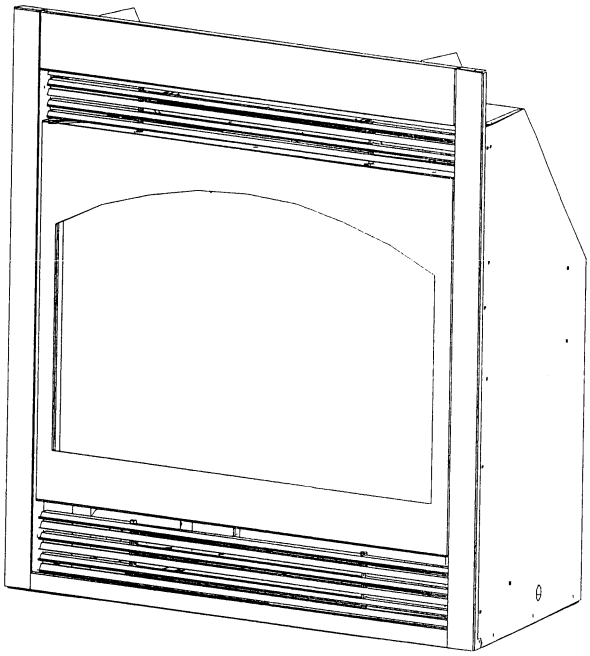

U.S. PATENTS:
#5.931.154,
#5,967,139
#6,004,493
Patent Pending

IMPORTANT:
READ INSTRUCTIONS CAREFULLY BEFORE INSTALLATION. FAILURE TO INSTALL THIS FIREPLACE CORRECTLY CAN CAUSE SERIOUS STRUCTURAL AND FIRE HAZARDS AND MAY VOID YOUR WARRANTY.

GLOBAL POSITIONING: N43° 40.177' W 095 ° 10.662'

Warnock Hersey
US

February 2003

INDEX

DESCRIPTION	PAGE
Safety Requirements / Specifications	1-2
Venting Guidelines / Clearances	3
Determine Location	4-5
Rough-In Vent Termination Dimensions	5
Rough-In Dimensions	6
Remove the Glass Assembly	6
Direct Vent System Installation	7-13
Guidelines & Requirements for Dura-Vent GS & #800 Series Vent Systems	7-10
Horizontal Termination with #800 Series D.V. Kit	10-11
Vertical Termination with #800 Series D.V. Kit	12-13
Fan Installation (Optional)	14-15
Gas Line Installation Requirements - Minimum/Maximum Pressures	16-17
Millivolt Board Removal / Installation	18-19
Log Installation	20
Thermostat - Remote Control - Wall Switch Installation	21
Completing the Installation (Replace the Glass Assembly, Upper & Lower Grills)	22-23
Damper Control Operation	23
Lighting & Shutdown Procedures	24-25
Manifold (outgoing) & Inlet (incoming) Pressure Check Procedures	26
Maintenance Requirements	27
Troubleshooting	28-29
Replacement Parts	30
Warranty Policy	31-32

INSTALLATION & OPERATING INSTRUCTIONS

IMPORTANT:

READ THIS MANUAL BEFORE INSTALLING AND USING THIS FIREPLACE

MODEL #942 DIRECT VENT
DECORATIVE / ROOM HEATER GAS BURNING FIREPLACE

INSTALLATION AND SERVICE MUST BE PERFORMED BY A QUALIFIED INSTALLER, SERVICE AGENCY OR THE GAS SUPPLIER.

WARNING: If the information in this manual is not followed exactly, a fire or explosion may result causing property damage, personal injury or loss of life.

This fireplace has been tested to and complies with ANSI Z21.88.CSA 2.33-M98 "VENTED GAS FIREPLACE HEATERS". Installation must comform with local building codes or in the absence of local building codes, with the National Fuel Gas Code, ANSI Z223.1, NFPA 54 - Current Edition.

This appliance may be installed in an aftermarket permanently located, manufactured (mobile) home, where not prohibited by local codes. This appliance is only for use with the type(s) of gas indicated on the rating plate. This appliance is not convertible for use with other gases, unless a certified kit is used.

FOR YOUR SAFETY

WHAT TO DO IF YOU SMELL GAS

- Open windows.
- Extinguish any open flame.
- Do not try to light any appliance.
- Do not touch any electrical switch; do not use any phone in your building.
- Immediately call you gas supplier from a neighbor's phone. Follow the gas supplier's instructions.
- If you cannot reach your gas supplier, call the fire department.
- Do not store or use gasoline or other flammable vapors and liquids in the vicinity of this or any other appliance.

WARNING: This Product Must Be Installed By A Licensed Plumber Or Gas Fitter When Installed Within the Commonwealth of Massachusetts.

WARNING: Do not use this fireplace if any part has been under water. Immediately call a qualified service technician to inspect this appliance and to replace any part of the control system and any gas control which has been under water.

WARNING: DO NOT REPLACE THIS BURNER UNIT WITH ANY OTHER SIZED BURNER. REPLACEMENT WITH AN UNAUTHORIZED BURNER CAN RESULT IN TEMPERATURES EXCEEDING THE LIMITS FOR THIS UNIT, AND VOID YOUR WARRANTY.

IMPORTANT:

NON-COMBUSTIBLE FACING MATERIAL MAY BE APPLIED OVER THE FACE. TO PREVENT THE FACING MATERIAL FROM CRACKING AND FALLING OFF DUE TO EXPANSION OF THE FACE WHEN HEATED, DO NOT ATTACH FACING MATERIAL DIRECTLY TO THE FACE OF THE UNIT.

UNIT SPECIFICATIONS -

HEIGHT (TOP OF FACE):	40"
HEIGHT (TOP OF STAND-OFF):	40"
FRONT WIDTH:	41 7/8"
BACK WIDTH:	31"
DEPTH (INCLUDES FACE):	19"
FLUE SIZE: 5" exhaust, 8" intake	

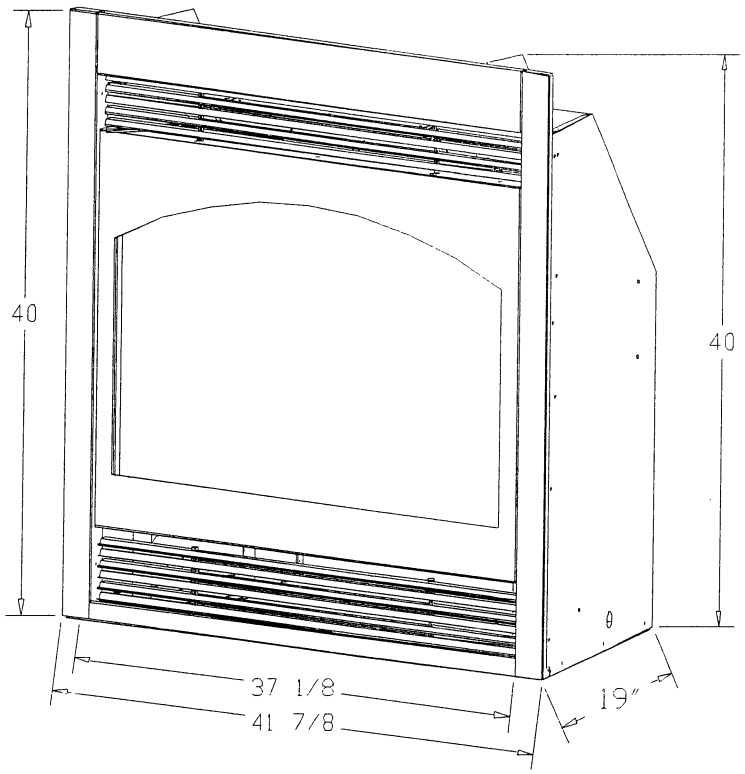

VENTING GUIDELINES

IMPORTANT: THIS UNIT IS APPROVED FOR USE ONLY WITH ONE OF THE FOLLOWING DIRECT VENT SYSTEMS. THESE SYSTEMS MAY BE USED FOR HORIZONTAL OR VERTICAL TERMINATIONS.

- #844 DIRECT VENT TERMINATION KIT - for terminations of 3' or less.
- #845 DIRECT VENT TERMINATION KIT - for terminations greater than 6' but less than 8'.
- #846 DIRECT VENT EXTENSION KIT-6'

- SIMPSON DURA-VENT DV-GS DIRECT VENT CHIMNEY SYSTEM - 5" X 8"

Refer to pages #8-13 for complete venting installation instructions / requirements.

CLEARANCES:

Minimum clearance to combustible material:

From units sides & back:	0"	From heat outlet to 8" mantel (or see fig.1):	13"
From unit top stand-off:	0"	From unit glazing (glass) to adjacent sidewall:	12"
To flooring:	0"	From unit to enclosure ceiling:	4"
From #800 Series flexible chimney:	2"	From Dura-Vent chimney system:	1"

NOTE: Even though the minimum clearance from the sides and back is 0", we recommend that you allow an expansion space of 1/4" from the sides and back. If this expansion space is not left, the unit will make a loud 'banging' noise when it heats up or cools down and cracking of any face material used may occur.

Figure 1

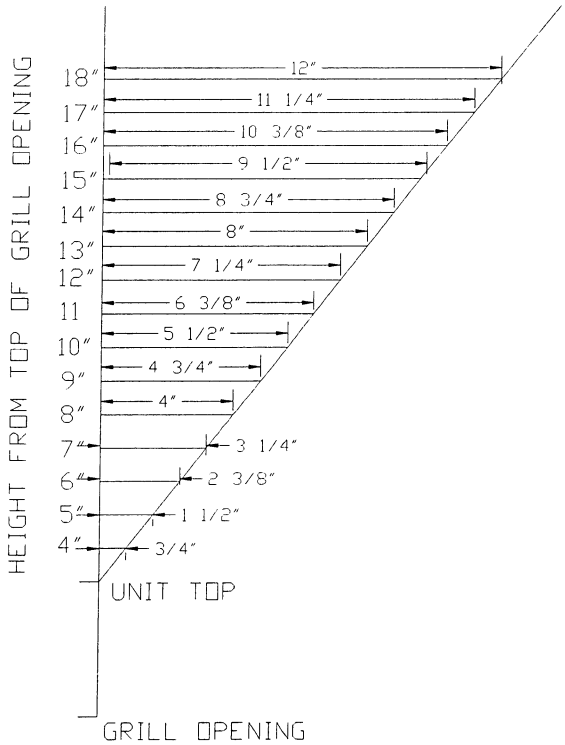

A) DETERMINE LOCATION - Figure 2.

1. Determine the exact position of your fireplace. If possible place the fireplace in such a manner that the piping will be placed between two studs so additional framing is not necessary.

2. The unit may be installed on either the outside or inside of an exterior wall. See figure 2A.

   The location of doors, windows, soffits / overhangs, etc. must be considered in relation to where the vent termination cap to be located. Refer to figure 2B, page 5.

3. Ensure the proper clearances are maintained as outlined on page 3.

4. If the optional heat ducts are used, their location must be considered in relation to the location of the fireplace.

   The heat ducts may be vented into the same room as the fireplace or may be vented to other rooms. A maximum run of 20 ft. for each duct is recommended.

   Venting should be completed before framing the unit in. Refer to instructions included in the #970 duct kit for complete installation requirements.

CAUTION: **THE SURROUNDING WOOD CHASE OF THE OUTSIDE WALL MUST BE INSULATED TO PREVENT COLD AIR FROM ENTERING THE ROOM.**

NOTE:	**Due to high temperatures, this unit should be located out of**
traffic	**areas and away from furniture and draperies.**

Figure 2A

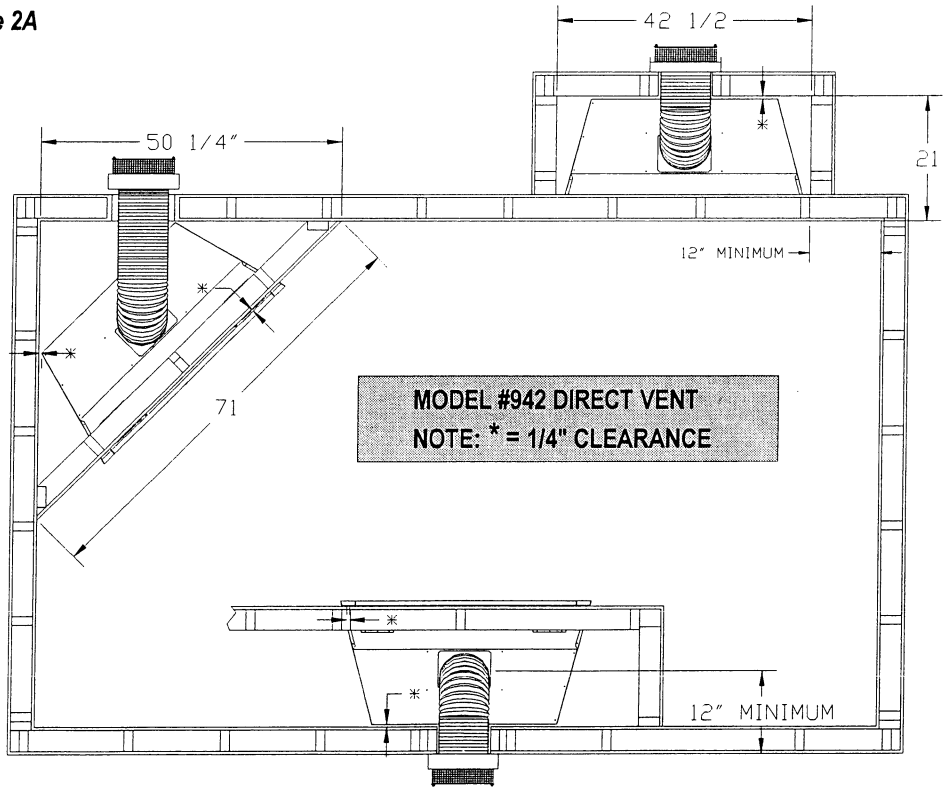

TERMINATION VENT CAP LOCATION:

This gas appliance must not be connected to a chimney flue serving another type of appliance.

IMPORTANT!

Horizontal Terminations using either the #800 Series Direct Vent System or Simpson Dura-Vent DV-GS Chimney System must follow the clearances to doors, window, and ground level as shown below for proper vent cap location.

GENERAL:

1. Terminations against vinyl siding must use a vinyl siding protector. Follow instructions included.

2. **DO NOT RECESS TERMINATION KIT INTO OUTSIDE BUILDING MATERIALS** - i.e.: brick, stone, etc.. If necessary, extend framing so that termination kit will be exposed once building materials are installed.

3. Vent termination must not be located where it will become plugged by snow or other material. The flow of combustion and ventilation air must be not obstructed.

LOCATION CLEARANCES:

- Above grade, veranda, porch, deck, balcony - 12". (A)
- Operable window - 12" (B)
- Permanently closed window - 12" (recommended to prevent condensation on window. (C)
- Ventilated soffit - 24" (D)
- Unventilated soffit - 12" (E)
- Outside / inside corner - 12" (F)
- Meter / Regulator: not to be installed above within 3 ft. horizontally from the center line of the regulator.
- Service regulator vent outlet - 6 ft. radius
- Electrical box - 3 ft. (G) DO NOT INSTALL ABOVE AN ELECTRICAL BOX!Non-mechanical air supply inlet to building - 12"
- Combustion air inlet to any other appliance - 12"
- Mechanical air supply inlet - 6 ft. (H)
- Above furnace exhaust or inlet - 12"
- Above paved side-walk or paved driveway located on public property - 7 ft. * (I)
- Under veranda, porch, deck, or balcony (must be fully opened on a min. of 2 sides) - 12" (J)
- Between two horizontal terminations - 12"
- Between two vertical terminations - 12" (K) - Note: May be the same height.

* A vent cannot be located directly above a side-walk or paved driveway that is located between two single family dwelling and serves both dwellings.

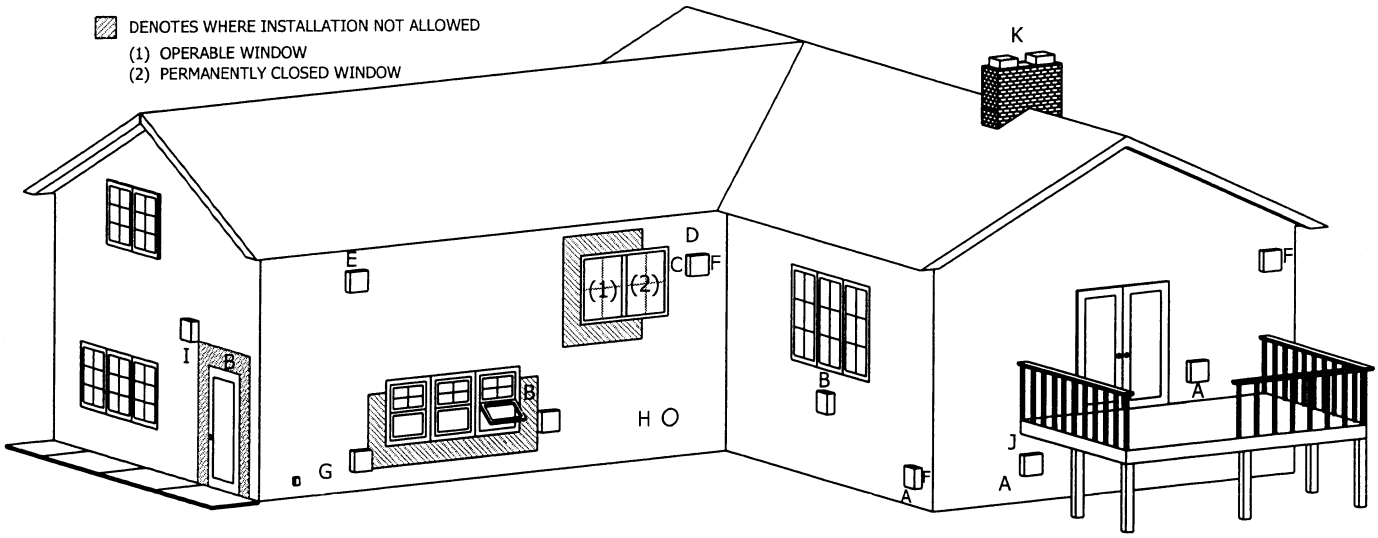

* CHECK LOCAL & STATE BUILDING CODES FOR ADDITIONAL REQUIREMENTS AND/OR RESTRICTIONS.

Figure 2B

B) FRAME & POSITION THE FIREPLACE

1. **Frame an opening for the firestop / wall thimble.** The location of this opening is determined by your venting specifications. Refer to the information below.

Figure 3

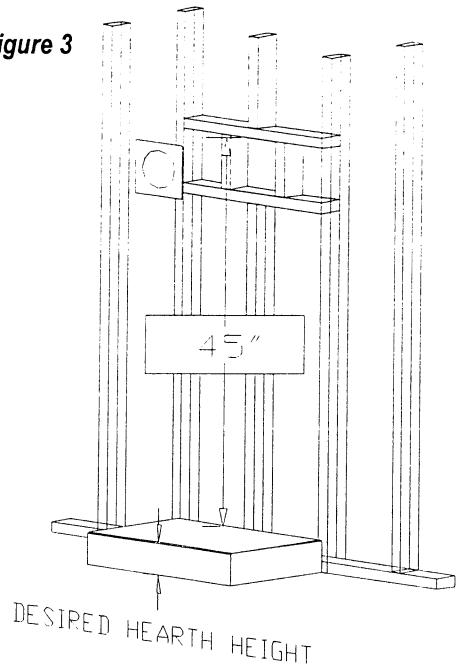

TYPICAL HORIZONTAL INSTALLATIONS:
Dimensions are 12 1/2" wide x 12 1/2" high when using the #800 series direct vent kits and 11" X 11" when using the Dura-Vent chimney system. The top of this opening must be a minimum of 45" * above the height of the hearth (optional). See Fig. 3. Refer to pages #8-#13 for additional venting specifications.

***IMPORTANT: This measurement is determined by the vertical height and horizontal length of the venting application desired. The measurement is to the TOP of the pipe. Refer to pages #7 - #13 of this installation manual for requirements and restrictions.**

2. **Rough in the wall enclosure.** The minimum rough opening dimensions are 42 1/2" wide, 40 1/4" high and 21" deep. Build the hearth to the desired size and height. See Figure 4, page 6.

NOTE: When the unit is installed directly on carpeting, tile, or other combustible materials other than wood flooring, it must be installed on a metal or wood panel extending the full width and depth of the unit. The minimum for the support platform under the unit is 42" wide by 19" deep. If masonry is to be used, (optional), prepare the necessary foundation for the masonry load. When masonry construction is being used, a lintel must be used over the top of the unit to support the added weight.

NOTE: A hearth is not required. If a hearth is desired, combustible materials may be used.

NOTE: Provide for a minimum of 6" of clearance in front of the lower grill. This will provide adequate space for opening to operate the control valve. Do not obstruct the upper and lower grill areas to allow proper ventilation air around the unit. Air enters the unit at the lower grill and exits at the upper grill. Do not block this passage.

FIGURE 4

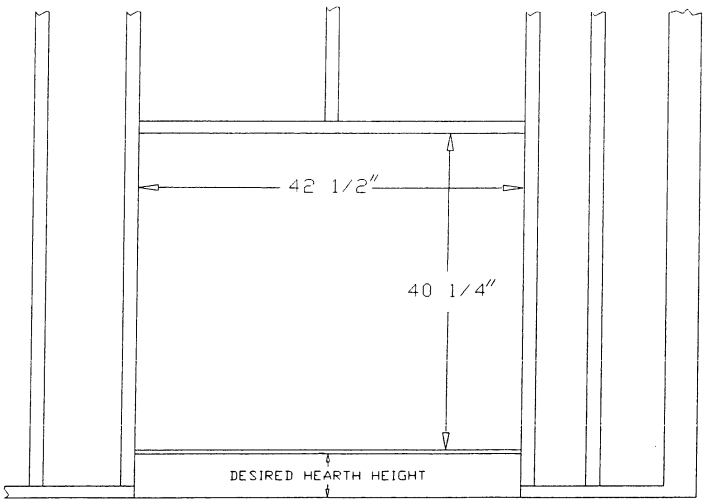

3. **Place the unit into position.**

4. REMOVE THE GLASS ASSEMBLY. See Fig. 5.

A. Locate the spring-loaded handles securing the glass assembly (under the firebox).
B. Pull the latch handles out, then down to release the glass assembly.
C. Pull the bottom of the glass assembly out and lift up off the tabs at the top.
D. Set aside where it will not be broken.
E. Remove the log package, embers bag and klinkers from inside the firebox & set aside for later installation.

FIGURE 5

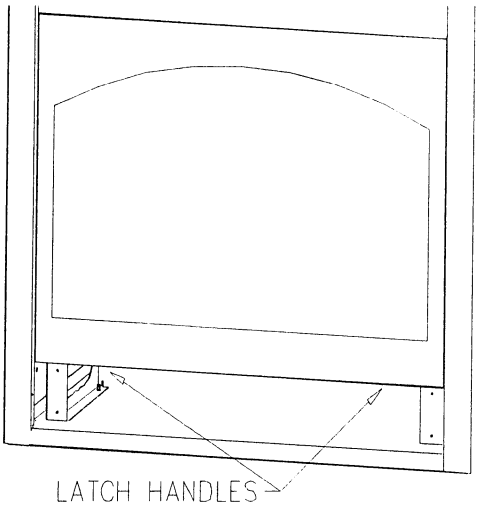

C) VENTING REQUIREMENTS

IMPORTANT: THIS UNIT IS APPROVED FOR USE ONLY WITH ONE OF THE FOLLOWING DIRECT VENT SYSTEMS.

Note: We recommend using the #800 series direct vent system for horizontal vent runs only. The Simpson Dura-Vent DV-GS 5" x 8" system may be used for both horizontal and vertical vent runs.

- **#844 DIRECT VENT TERMINATION KIT - for vent runs 3' or less.**
- **#845 DIRECT VENT TERMINATION KIT - for vent runs greater than 6' but less than 8'.**
- **#846 DIRECT VENT EXTENSION KIT - 6'**

- **SIMPSON DURA-VENT DV-GS DIRECT VENT CHIMNEY SYSTEM - 5" x 8".**

HORIZONTAL TERMINATIONS:

Minimum 6" run directly from appliance outlet, followed by a 45-degree elbow.
Minimum horizontal run outlet: 6"
Maximum Horizontal run: 20 ft. (with 1/4" per foot incline)

VERTICAL TERMINATIONS:

Attach a 45-degree elbow directly onto appliance outlet.
Maximum vertical rise from appliance outlet: 40 ft.

IMPORTANT: Straight vertical terminations must use the included restrictor plate for vent runs 15' - 40'.

ELBOWS:

(1) 45° elbow at start & (2) 90° elbows included within the maximum vent runs. Each additional elbow reduces the maximum horizontal distance by 5'.

FOR SIMPSON DURA-VENT DV-GS 5" X 8" CHIMNEY SYSTEM INSTALLATIONS - Follow chimney installation instructions included with the chimney system.

Vertical Termination: A 45-degree elbow may be attached directly to the fireplace and run a maximum of 40 ft. 2 - 90-degree elbows may be used within the 40 ft. vertical vent run.

Vent runs of 15' - 40' must install the restrictor plate included with this fireplace.

Figure 6

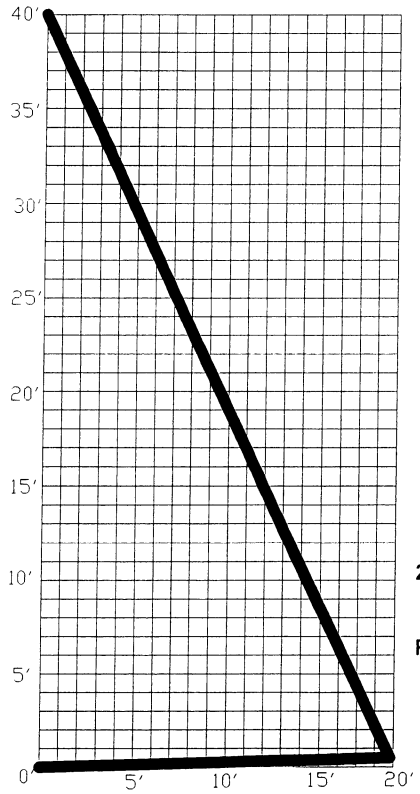

20 FT. MAX. HORIZONTAL RUN
IMPORTANT:
1/4" RISE PER HORIZONTAL FOOT MUST BE MAINTAINED.

Horizontal terminations: The minimum vent run directly off the fireplace is 6". Connect to a 45-degree elbow prior to attaching to the fireplace to ensure the chimney is positioned horizontally. 2 - 90-degree elbows may be used within the maximum 20 ft. horizontal vent run. For each additional elbow, the maximum horizontal distance must be reduced by 5'.

VERTICAL TERMINATIONS:

WHEN VERTICALLY TERMINATING THE MINIMUM CHIMNEY HEIGHT ABOVE THE ROOFLINE IS DETERMINED BY THE FOLLOWING CHART:

Roof Pitch	Minimum Height above roof line	Roof Pitch	Minimum Height above roof line
Flat to 6/12	1 ft.	11/12 to 12/12	4 ft.
6/12 to 7/12	1 ft. 3 in.	12/12 to 14/12	5 ft.
7/12 to 8/12	1 ft. 6 in.	14/12 to 16/12	6 ft.
8/12 to 9/12	2 ft.	16/12 to 18/12	7 ft.
9/12 to 10/12	2 ft. 6 in.	18/12 to 20/12	7 ft. 6 in.
10/12 to 11/12	3 ft. 3 in.	20/12 to 21/12	8 ft.

IMPORTANT: VERTICAL TERMINATIONS USING THE #800 SERIES FLEXIBLE CHIMNEY SYSTEMS REQUIRE A SUPPORTING CHASE TO BE BUILT AROUND THE CHIMNEY ABOVE THE ROOF LINE. A 2" CLEARANCE TO COMBUSTIBLE MATERIALS MUST BE MAINTAINED AROUND THE PIPE.

EXAMPLE OF TYPICAL HORIZONTAL & VERTICAL TERMINATIONS

Figure 7A

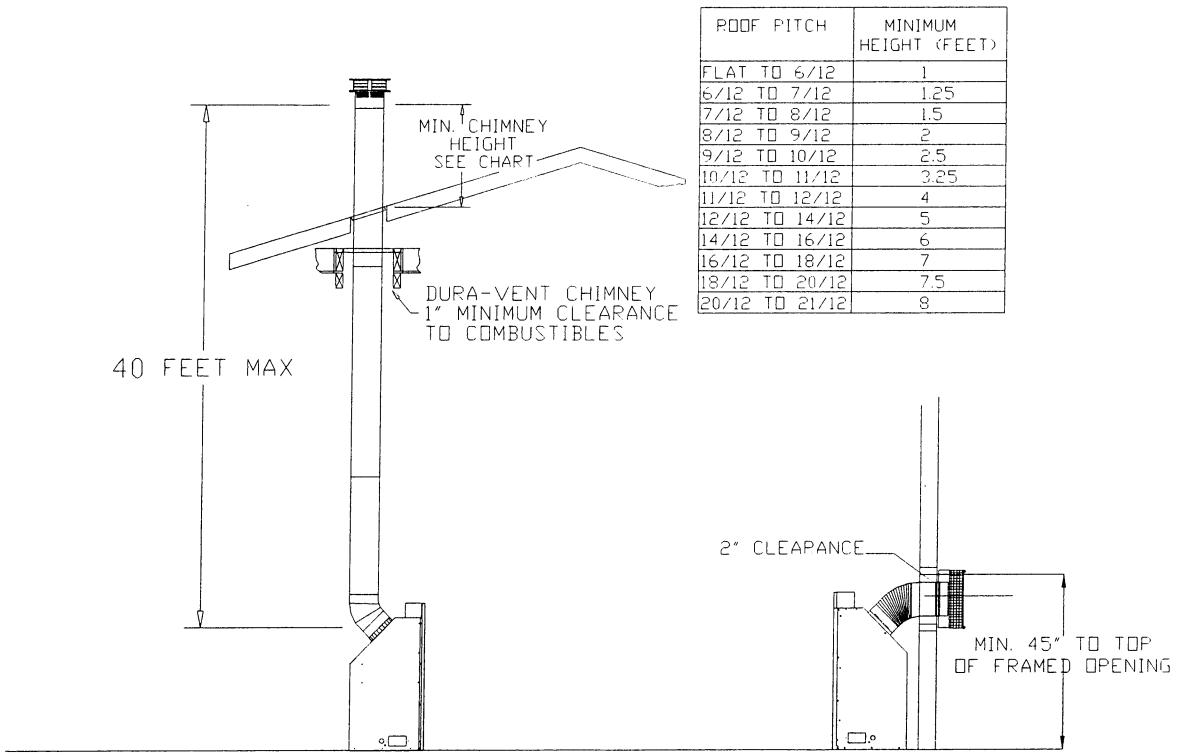

ROOF PITCH	MINIMUM HEIGHT (FEET)
FLAT TO 6/12	1
6/12 TO 7/12	1.25
7/12 TO 8/12	1.5
8/12 TO 9/12	2
9/12 TO 10/12	2.5
10/12 TO 11/12	3.25
11/12 TO 12/12	4
12/12 TO 14/12	5
14/12 TO 16/12	6
16/12 TO 18/12	7
18/12 TO 20/12	7.5
20/12 TO 21/12	8

Note: Simpson Dura-Vent chimney system shown in vertical termination.

Note: Kozy Heat Direct Vent System shown in horizontal termination.

TYPICAL HORIZONTAL TERMINATION

FIGURE 7B

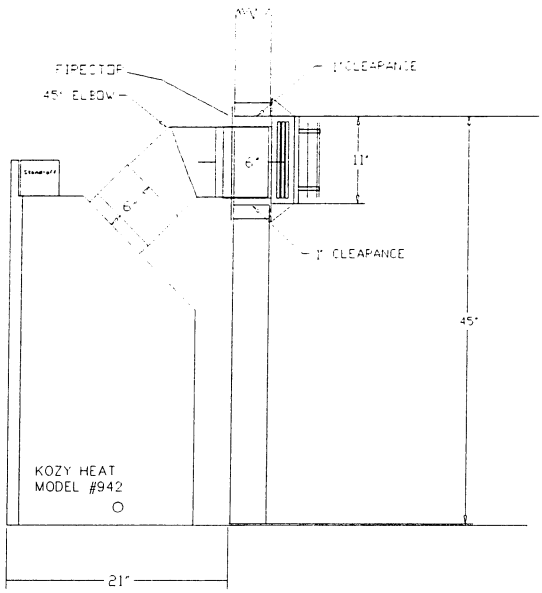

*SIMPSON DURA-VENT DV-GS CHIMNEY SYSTEM INSTALLATIONS:

Follow the installation instructions included with the chimney system along with the following requirements:

- Vent runs must be in compliance as outlined on pages #6 - #9 of this installation manual. Straight vertical runs of 15 - 40 ft. require a restrictor plate.

- A 45 degree elbow may be used directly at the stove connection to vertically position the chimney.

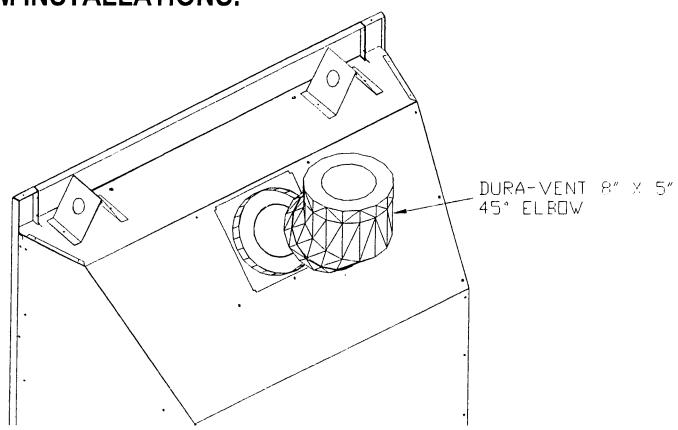

FIGURE 8

- The 5" pipe on the elbow or 6" section fits *INSIDE* the 5" collar on the stove.
- The 8" pipe on the elbow or 6" section fits *OUTSIDE* the 8" collar on the stove.

Secure the elbow or 6" section of chimney to the 8" collar with four screws (not provided).

INSTALLATION OF #800 SERIES DIRECT VENT TERMINATION KIT(S)

IMPORTANT:
The flex pipe is permanently attached to the exterior plate. DO NOT ATTACH the #844 or #845 termination kit to the stove (or extension kit) until it has passed through the wall or roof. The termination plates should all be installed on the exterior of the outside wall or top of supporting chase on the roof.

HORIZONTAL TERMINATIONS

IF TERMINATING AGAINST VINYL SIDING, A VINYL SIDING PROTECTOR, INCLUDED WITH THE #844 and #845 DIRECT VENT KITS, MUST BE USED. FOLLOW INSTRUCTIONS INCLUDED.

CAUTION: This gas appliance must not be connected to a chimney flue serving another type of appliance.

1. If your chimney termination is 8' or less from the stove top and doesn't require an extension kit, proceed to step #7.

2. If your chimney termination will require one or more extension kits (part #846), proceed with the following steps. Each #846 extension kit contains enough 5" and 8" flexible aluminum to extend the chimney an additional 6'.

3. Gently stretch the 5" & 8" flexible aluminum pipes on the termination kit (#844 or #845) and on each extension kit, if used, the length required so when all the sections are connected together, the chimney height for your installation is attained.

IMPORTANT: DO NOT STRETCH THE EXTENSION KIT BEYOND 6'. DO NOT STRETCH BEYOND WHAT IS REQUIRED - IT IS VERY DIFFICULT TO RECOMPRESS THE FLEX PIPES ONCE STRETCHED.

4. Using your extension kit pieces, place a bead of sealant outside the 5" flex pipe collar (C) - the end with the EXTERNAL lip - and slide it inside the 5" pipe on top of the stove (D). This is a snap lock connection. Secure with 3 additional evenly spaced screws.

NOTE: The snap lock connection is permanent, you will not be able to remove this pipe once applied without damage.

5. Place a bead of sealant inside the 8" flex pipe collar (E) - the end with the internal lip - and slide it over the 8" pipe on top of the stove (F). This is a snap lock connection. Secure with 3 additional evenly spaced screws.

Note: The minimum vertical rise is from the connection on the stove to the top of the pipe.

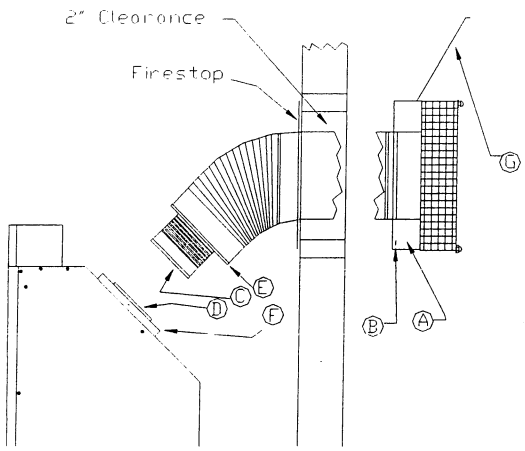

FIGURE 9

6. If additional extension kits are being used, repeat steps 4 and 5, placing the 5" & 8" pipes onto the previous extension kit.

Referring figure 9, page 11:

NOTE: Attachment brackets are included with the termination kit. These optional brackets should be screwed or nailed (screws not provided) onto the top and bottom of the 12 1/2" square opening, on the exterior of the house. The termination plates then fit between these brackets, and using the screws provided, screw the brackets to the termination kit box (A). Attach the vinyl siding protector (G).

7. Apply a liberal bead of exterior sealant around the outer edge of the plate (A), and place the assembly through the 12 1/2" square opening in the exterior wall. Place screws through the four slots (B) securing it in place.

8. Gently pull the 5" & 8" flexible aluminum down to the top of the extension kit, or the top of the unit if no extension kits were used.

9. Place a bead of sealant outside the 5" flex pipe collar (C) and slide it into the 5" pipe on the extension kit or top of the stove (D). Secure with 3 additional evenly spaced screws.

NOTE: This snap lock is permanent, you will not be able to remove this pipe once applied without damage.

10. Place a bead of sealant inside the 8" flex pipe collar (E) and slide it over the 8" pipe on the extension kit or top of the stove (F). This is a snap lock connection. Secure with 3 additional evenly spaced screws.

11. OPTIONAL: Place insulation between the 8" pipe and the wall studs.

VERTICAL TERMINATIONS:

Prepare the chimney:

1. Gently stretch the 5" & 8" flexible aluminum pipes on the termination kit (#844 or #845) and on each extension kit, if used, the length required so when all the sections are connected together, the chimney height for your installation is attained.

IMPORTANT:

DO NOT STRETCH THE EXTENSION KIT BEYOND 6'. DO NOT STRETCH BEYOND WHAT IS REQUIRED - IT IS VERY DIFFICULT TO RECOMPRESS THE FLEX PIPES ONCE STRETCHED.

2. If your chimney is 8' or less from the stove top and doesn't require an extension kit, proceed to the ' Connect the chimney to the stove' section.

3. If your chimney termination will require one or more extension kits (#846), proceed with the following steps. Each #846 extension kit contains enough 5" & 8" flexible aluminum pipe to extend the chimney an additional 6'.

Connect the chimney sections:

1. Place a bead of sealant outside the 5" flex pipe collar on the termination kit (#844 or #845) and slide inside the 5" collar - the end with the internal notches- on the extension kit. Secure with 3 additional evenly spaced screws.

2. Place a bead of sealant inside the 8" flex pipe collar on the termination kit (#844 or #845) and slide it over the 8" collar - the end with the external notches - on the extension kit. Secure with 3 additional evenly spaced screws.

3. If additional extension kits are being used, connect the 5" & 8" flex pipes on each extension kit together in the same manner as described in steps #1 & #2.

Connect the chimney to the stove:

A firestop should be secured to the 12 1/2" x 12 1/2" framed opening whenever passing the chimney through a ceiling or roof.

NOTE: The framing and supporting chase for the termination kit should be at least partially complete.

1. Place a weighted rope around the end of the 5" & 8" flex pipes and carefully guide them down the chase to the top of the stove.

2. Apply a liberal bead of sealant around the outer edge of the plate (A) , and place on top of the chase. Secure using the screws provided.

3. The restrictor plate (included) must be placed inside the 5" flue collar on the top of the stove before connection of the chimney to stove is made. This is required for vent runs of 15' - 40'.

a. Bend the (3) tabs on the restrictor plate required for your installation far enough so that it will securely fit inside the groove on the 5" collar on the stove. (Note: The tabs should be in the 'up' position.)Refer to figure #10 below.

4. Connect the flex pipes to the stove as follows: Place a bead of sealant outside of the 5" flex pipe collar (end should have external lip) and slide it inside the 5" pipe on the stove. This is a snap lock connection. : Secure with 3 additional evenly spaced screws.

5. Place a bead of sealant inside the 8" flex pipe collar (end should have an internal lip) and slide it over the 8" pipe on the stove. This is a snap lock connection. Secure with 3 additional evenly spaced screws.

6. OPTIONAL: Place insulation around the 8" pipe.

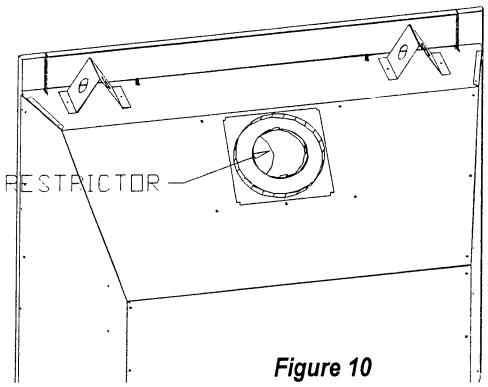

Figure 10

D) FAN INSTALLATION (OPTIONAL)

INSTALLATION OF THIS FAN SHOULD BE DONE ONLY BY A QUALIFIED INSTALLER.

IMPORTANT: IF THE FAN IS INSTALLED AFTER UNIT INSTALLATION, THE LOWER GRILL MUST BE REMOVED TO PROPERLY INSTALL.

NOTE: If a fan is going to be installed, the wiring must be done prior to enclosing the sides of the unit. A removable electrical box panel is pre-installed in the fireplace and a receptacle and cover is included in the fireplace components packet.

Your optional fan kit includes:

1. Right and left fan assemblies with fan and limit switch already mounted.
2. Components package: Includes speed with mounting bracket, nut & knob, (4) nuts, installation instructions.

NOTE: To wall-mount the speed control, you will need to purchase: (1) Electrical box
(1) Cover / switch plate

To mount the speed control on the dashboard panel behind the lower grill, you will need part #600-087, which includes a speed control assembly and mounting bracket. Follow instructions included to properly mount this optional assembly.

IMPORTANT: CODE APPROVED LINE VOLTAGE WIRING 16 GAUGE OR BETTER MUST BE UISED WHEN WIRING THIS SYSTEM.

WARNING: This appliance is equipped with a three-prong (grounding) plug for protection against shock hazard and should be plugged directly into a properly grounded three-prong receptacle. Do not cut or remove the grounding prong from this plug.

IMPORTANT: BLACK & WHITE SPEED CONTROL WIRES SHOULD BE CONNECTED TO THE INCOMING 'BLACK' ELECTRICAL WIRE. DO NOT CONNECT THE WHITE SPEED CONTROL WIRE TO THE 'NEUTRAL' ELECTRICAL WIRE. THIS WILL RESULT IN PERMANENT DAMAGE TO THE SPEED CONTROL AND IT WILL NEED REPLACING. See wiring diagram below.

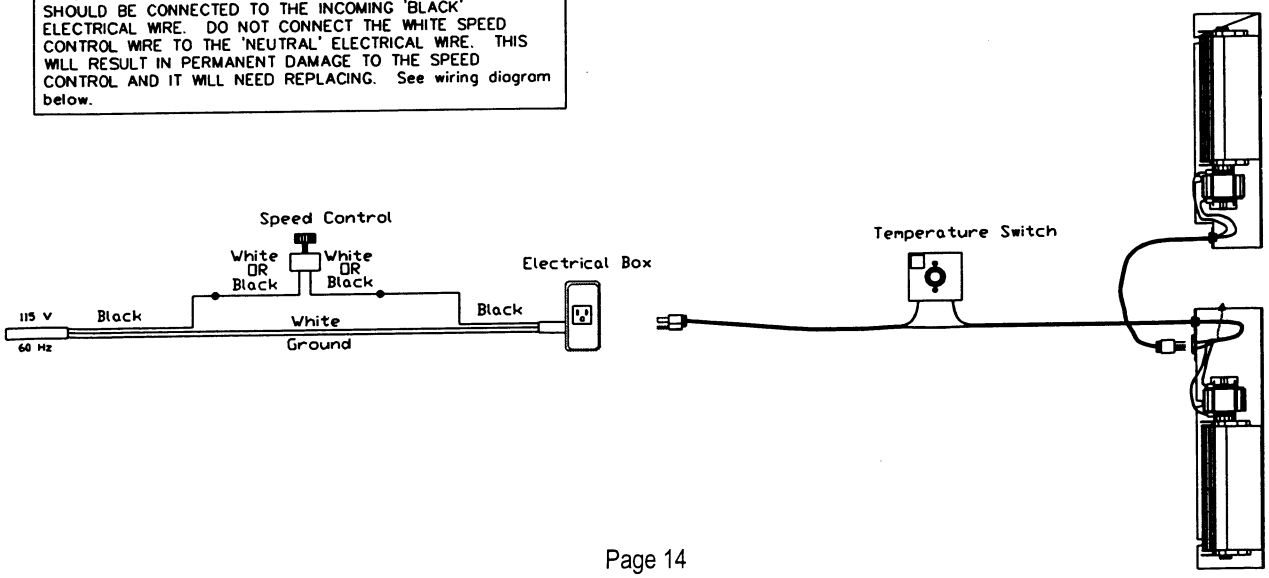

INSTALLATION INSTRUCTIONS. REFER TO FIGURE #11.

1. Slide the right fan(with receptacle) (A) through the lower grill opening and place over the (2) right side mounting studs (B) located towards the back of the unit.
2. Slide the remaining fan assembly through the lower grill opening and place over the (2) left mounting studs (B) located towards the back of the unit.
3. Place nuts on mounting studs and tighten.
4. Install electrical box and mount the speed control on a wall, if desired.
5. Snap the receptacle into the cover (included in the components packet included with this fireplace).
6. Insert 115V wiring (with ground) through the romex connector installed in the electrical box in the side of the unit and wire to the receptacle.
7. Place the cover on the electrical box (in the side of the unit) and secure with screws.
8. Place the thermostatic control switch (C) on the bottom of the unit, directly behind the control valve.
9. Plug fans together by inserting the three-prong fan cord (D) on the left fan assembly into the receptacle in the right fan assembly.
10. Plug cord (E) into receptacle in the electrical box.
11. Turn on/off speed control clockwise until it clicks.

NOTE: The fan will not operate unless the speed control has been turned on. The fan will not turn on until sufficient heat is applied to the thermostatic control switch (C). The fan will turn on and off automatically when the fireplace heats and cools. Adjust fan to desired speed while it is running.

NOTE: This system, when installed, must be electrically grounded in accordance with local codes, or in the absence of local codes, with the National Electrical Code, ANSI/NFPA 70-Current edition.

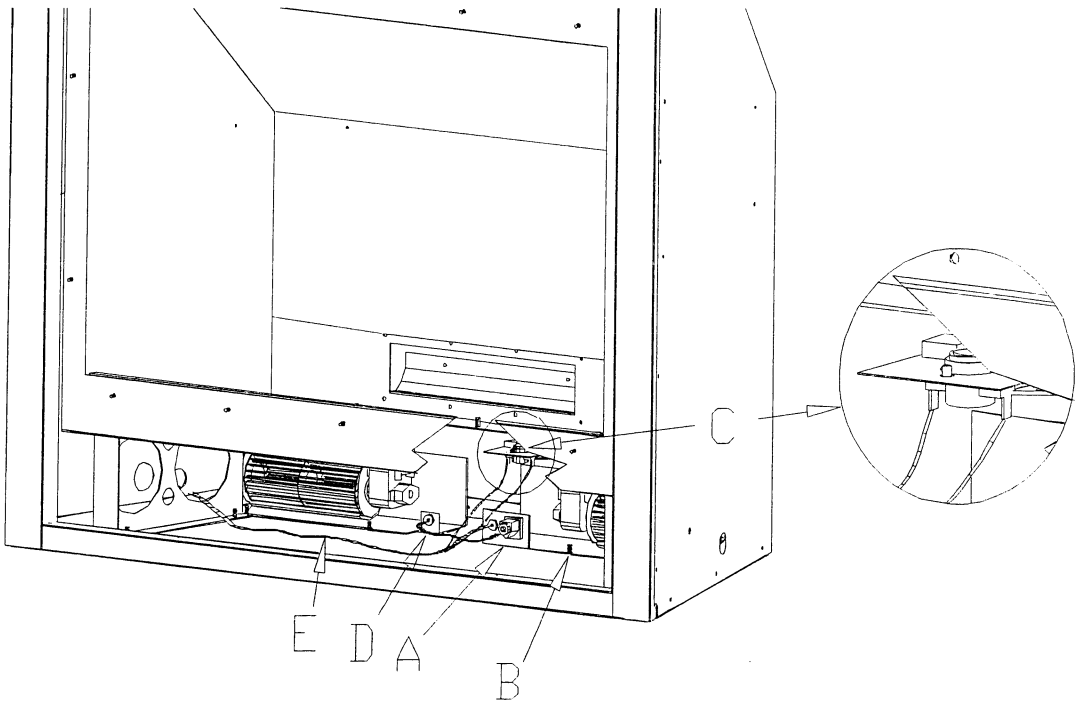

FIGURE 11

E) RUN THE GAS LINE.

CAUTION: Installation of the gas line must only be done by a qualified person in accordance with local building codes.

This unit is equipped with a 3/8" flexible gas line connection 18" long.

NOTE: The gas line should be run to the point of connection where the manual shut off valve and flexible gas line will connect.

CAUTION: The manual shut off valve or flexible gas line must not extend outside the unit cavity. See the WARNING label affixed to the flexible gas line for additional installation instructions and warnings.

4. Run the gas line. An accessible shut off valve (included with the unit) must be installed up stream from the regulator.

IMPORTANT: DO NOT RUN THE GAS LINE IN A MANNER THAT WOULD OBSTRUCT THE OPERATION OF THE OPTIONAL FAN.

2. This unit is designed to accept either a 3/8" or 1/2" gas line approved for gas appliances. Consult local building codes to properly size the gas supply line leading to a 3/8" reduction. Also, see the chart on page #17 for proper supply line sizing.

3. A gas line knockout is positioned on either side of the unit to run the gas line to the unit cavity.

4. Connect the manual shut off valve to the previous run gas line.

5. Connect the flexible gas line (installed on the millivolt board valve) to the manual shut off valve.

IMPORTANT: ALL CONNECTIONS WHETHER FIELD OR FACTORY MADE MUST BE CHECKED FOR LEAKS.

NOTE: This appliance and its individual shut off valve must be disconnected from the gas supply piping system during any pressure testing of that system at test pressures in excess of 1/2 psi.

NOTE: This appliance must be isolated from the gas supply piping system by closing its individual manual shut off valve during any pressure testing of the gas supply piping systems at test pressures equal to or less than 1/2 psi.

Pressure check taps for both the manifold (outgoing) and inlet (incoming) pressures are located in front of the gas valve. The top pressure tap is the manifold pressure and the bottom pressure tap is the incoming pressure. Follow instructions on page # 26 for checking these pressures.

NATURAL GAS ONLY:

The minimum inlet gas supply pressure: 5.0 inches W.C.
The maximum inlet gas supply pressure: 10.5 inches W.C.
Manifold Pressure: 3.5 inches W.C.
Manifold Pressure (lo setting): 1.7 inches W.C.

Orifice size (0-2000 ft): 30 Input rating: 39,000 BTU

LP GAS ONLY:

The minimum inlet gas supply pressure: 11.0 inches W.C.
The maximum inlet gas supply pressure: 13.0 inches W.C.
Manifold Pressure: 10.0 inches W.C.
Manifold Pressure (lo setting): 6.4 inches W.C.

Orifice size (0-2000 ft): 49 Input rating: 35,500

For high altitude installations, consult the local gas distributor or the authority having jursidiction for proper rating methods.

F) MILLIVOLT BOARD REMOVAL / INSTALLATION. See Figures 12A & 12B.

NOTE: This unit is equipped with the millivolt board and burner cover assembly already installed. Please ensure that all of the nuts are tightened, securing the board to the firebox bottom and the burner cover assembly is secured to the millivolt board. Follow these procedures should the millivolt board need replacing or is removed for service and/or maintenance or fan installation.

MILLIVOLT BOARD REMOVAL:

CAUTION: If the burner and/or pilot has been burning, the logs will be warm and will continue to hold heat. Place them on a protected surface upon removal to avoid damage to floor or personal property.

1. Turn the black control knob to the 'OFF' position.
2. Shut off the gas supply at the manual shut off valve.
3. Disconnect the flexible gas line from the manual shut off valve.
4. Remove the speed control and/or remote receiver assembly from the dashboard panel, if installed and remove the dashboard panel.
5. Disconnect any remote control, wall switch or thermostat wires from the top and bottom terminals on the gas valve.
6. Remove the upper grill and glass assembly and set aside. Refer to the instructions in this manual if necessary.
7. Remove the logs from the board and set on a properly protected surface where they will not be broken.
8. Loosen and remove the (2) nuts securing the burner cover assembly to the millivolt board as shown in figure 12A. Lift the front of the plate up and slide it to the right, off the burner orifice and remove from the firebox.

   NOTE: Release the venturi collar from the bracket while removing the burner cover. Keep venturi collar on the burner tube (shown in figure 12C).

Figure 12A

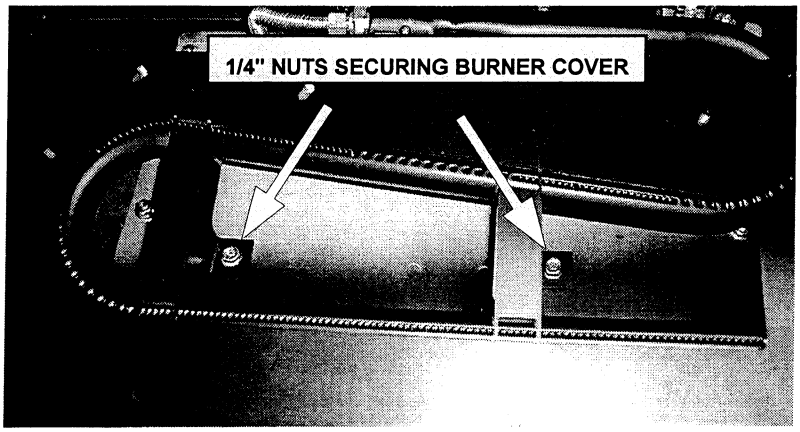

9. Loosen and remove the (8) 1/4" nuts securing the millivolt board (figure 12B).
10. Carefully lift the board up off the (8) mounting studs and remove the fireplace.

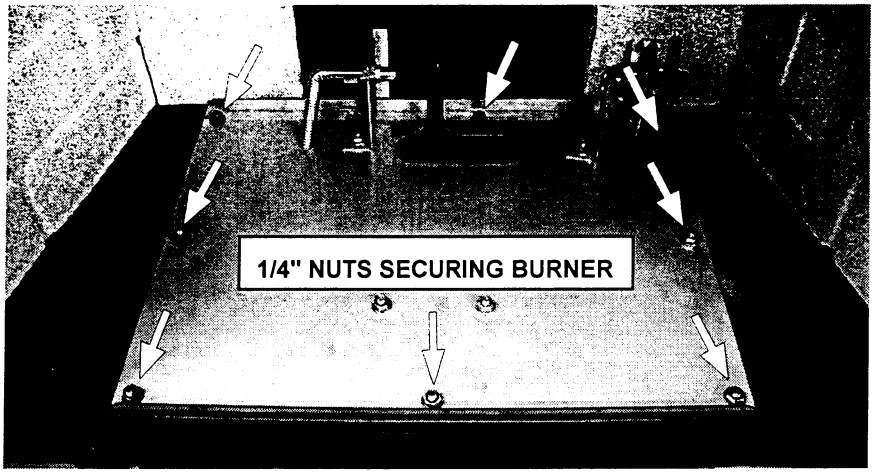

Figure 12B

INSTALLING THE MILLIVOLT BOARD:

NOTE: The millivolt board is fitted with a gasket to seal the board. Make certain this gasket is properly placed around the opening before installing the millivolt board.

1. Grasp the burner with both hands and place into the unit, lining up the eight 1/4" holes in the board to the mounting studs on the firebox bottom. (Figure 12B)

CAUTION:	BEFORE SECURING THE BOARD INTO PLACE, MAKE CERTAIN THAT ALL OF THE WIRES (ATTACHED UNDER THE BOARD) ARE CLEAR AND UNOBSTRUCTED.

2. Attach the 1/4" nuts (included with the board assembly) and tighten.
3. Replace the burner cover assembly , properly seating the burner tube over the orifice and aligning the mounting holes in the burner brackets to the corresponding mounting studs on the bottom of the millivolt board.
4. Check that the burner tube is properly seated over the burner orifice. (Figure 12C)
5. Secure the burner cover with the remaining (2) nuts previously removed. (Figure 12A)
6. To position the adjustable venturi collar into its mounting bracket, gently push the bracket back far enough to slip the flange on the collar into the slot on the bracket. Figure 12D.
7. Reconnect the flexible gas line to the manual shut off valve.
8. Reconnect any remote control, wall switch or thermostat wires to the top & bottom terminals on the valve.
9. Attach and secure the dashboard panel.
10. Re-attach the speed control and/or remote control assembly to the dashboard panel, if used.
11. Replace the logs and embers as described on page #20.
12. Light the pilot and burner to ensure proper ignition and operation.
13. Replace the glass assembly and upper grill. Close the lower grill.

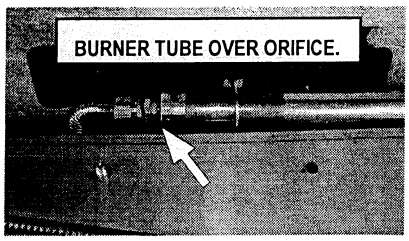

Figure 12C

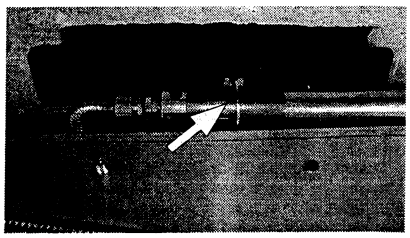

Figure 12D

IMPORTANT:	CHECK ALL CONNECTIONS, WHETHER FIELD OR FACTORY MADE FOR LEAKS.

G) LOG INSTALLATION. See Figures 13A - 13D.

This #942-50D Log Set includes:

(1) BC-Log	(1) AP-Log	(1) BB-Log
(1) AY-Log	(1) AR-Log	(1) BD-Log
(1) AZ-Log	(1) JA-Log	

NOTE: THE CORRESPONDING LETTER(S) FOR THE LOGS ARE PRINTED ON THE BOTTOM OF EACH LOG. THE 'JA' LOG IS NOTCHED AND SHOULD BE POSITIONED ONTO THE BURNER COVER PLACING THE NOTCHED OUT SECTIONS IN THE LOG TO THE BRACKETS IN THE CENTER OF THE BURNER COVER.

1. Position the 'JA' log onto the center of the burner cover, aligning the notches in the bottom of the log to the brackets in the burner cover. Figures 13A & 13B.

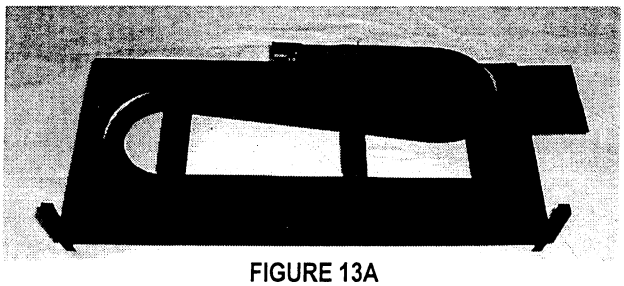

FIGURE 13A

FIGURE 13B

2. Place the 'BC', 'BB', 'AY', and 'AZ' logs into position on the burner cover as shown in Figure 13C.

NOTE: The 'BB' log sets on the plate attached to the burner cover.

IMPORTANT: DO NOT ALLOW THE LOGS TO COVER THE BURNER OR BURNER PORT HOLES.

Press the logs onto the mounting pins to secure them in place.

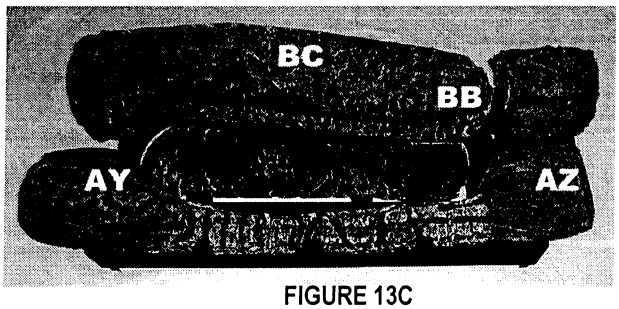

FIGURE 13C

3. EMBERS INSTALLATION: Place the burning embers between the center 'BC' log and front 'AY' and 'AZ' logs following instructions included with the embers packet.

4. Position top logs 'AP, 'AR', and 'BD' onto the previously positioned logs as shown in figure13D.

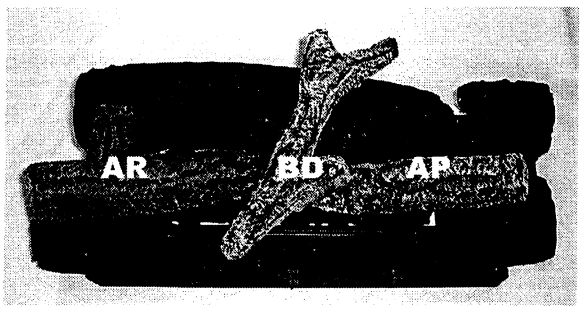

FIGURE 13D

INITIAL BURN PERIOD

During the initial burn period, the logs and refractory panels will discolor. This is normal and par the of the curing process. Once the curing process is complete (approximately 2-4 hrs), the true color will return.

DO NOT BURN THIS FIREPLACE WITHOUT THE GLASS ASSEMBLY IN PLACE.

MAKE SURE THE HOMEOWNER IS AWARE OF THIS!

H) THERMOSTAT - WALL SWITCH - REMOTE CONTROL INSTALLATION (optional).

CAUTION: DO NOT connect high voltage (115 V) wire to the switch.

If desired, a thermostat, wall switch <u>or</u> remote control unit may be used to turn the unit off and on. <u>Only one of these may be installed.</u> Follow instructions included with each kit.

IMPORTANT: No high voltage (115v) is required to operate any of these systems.

<u>IMPORTANT:</u> IF THE DASHBOARD PANEL HAS BEEN ATTACHED TO THE VALVE BRACKET, IT MUST BE REMOVED TO EXPOSE THE WIRE CONNECTIONS ON THE VALVE TERMINAL.

OPTIONAL: Disconnect the on/off rocker switch wires from the top & bottom terminals on the gas valve.

NOTE: INSTALLATION OF A THERMOSTAT OR WALL SWITCH SHOULD ONLY BE DONE BY A QUALIFIED INSTALLER

WALL SWITCH / THERMOSTAT USERS:

Run *<u>low- voltage (thermostat) wire</u>* from the top and bottom terminals on the gas valve to the desired location of the thermostat or wall switch.

Attach the appropriate connector to each wall switch / thermostat wire and connect to the top and bottom terminals on the gas valve.

REMOTE CONTROL USERS :

Follow instructions included with the remote control.

IMPORTANT: The insulated cover included with the remote control must be placed over the remote receiver to protect it from overheating.

An optional remote control receiver bracket, part #791-2, is available to mount the receiver onto the right side of the dashboard panel behind the lower grill. For additional information or to purchase this kit, please contact your dealer.

IMPORTANT: If the ON/OFF rocker switch wires are not disconnected, the rocker switch must be in the 'OFF' position if on of these systems are installed on the fireplace.

IMPORTANT: The fireplace must be turned 'ON' and 'OFF' by the same method. FOR EXAMPLE: If the fireplace is turned 'ON' by the remote control, it must be turned 'OFF' by the remote control.

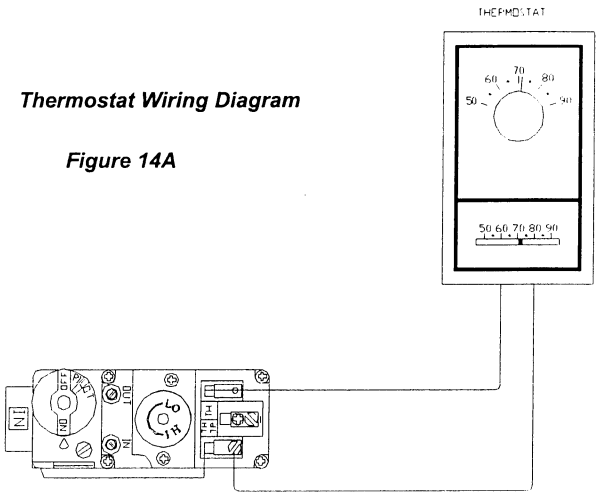

Thermostat Wiring Diagram

Figure 14A

Remote Control Wiring Diagram

Figure 14B

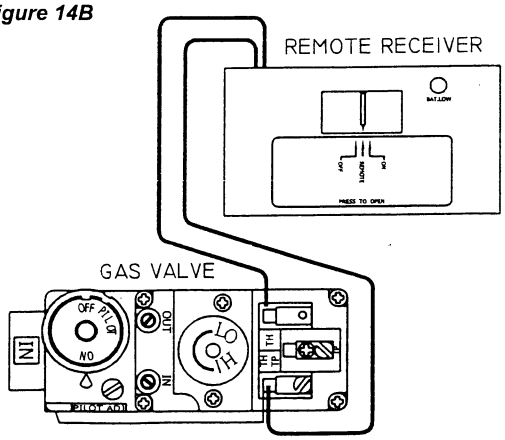

I) COMPLETE THE INSTALLATION

1. Complete the fireplace walls and the unit facing. Optional edging brackets are available.

CAUTION: THE SURROUNDING WOOD CHASE OF THE OUTSIDE WALL MUST BE INSULATED TO PREVENT COLD AIR FROM ENTERING THE ROOM.

2. Attach the dashboard panel included in the components packet to the front of the gas valve bracket behind the lower grill. This is accomplished by aligning the holes in the dashboard panel to the corresponding holes in the bracket & secure with the (2) screws provided.

   Optional: Affix the dashboard panel label to the front of the dashboard prior to attaching to the bracket.

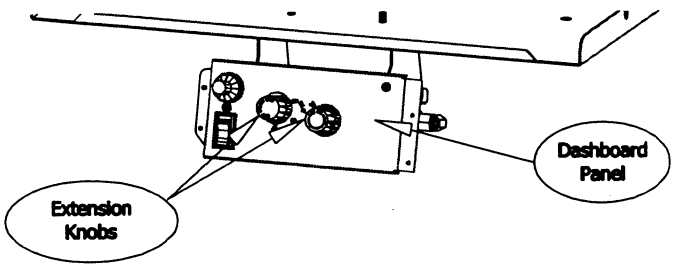

3. Place the extension knobs included in the components packet through the corresponding holes on the dashboard panel and slide onto the control knobs on the gas valve.

4. THIS STEP SHOULD ONLY BE DONE BY A QUALIFIED INSTALLER OR SERVICE TECHNICIAN:

A) Perform lighting and shutdown procedures as described on pages #24-25. This should be done prior to replacing the glass so that any necessary adjustments can be made and proper operation verified.

5. Replace the glass assembly. Figure 15.

A) Align the slots in the top of the glass assembly over the tabs on the fireplace.
B) Place the glass assembly so it is flush with the front of the fireplace front.
C) Secure the assembly to the fireplace by pulling the spring-loaded latch rods out, then up and releasing them onto the brackets securing the glass assembly (located under the firebox).

WARNING: DO NOT OPERATE THIS FIREPLACE WITH THE GLASS ASSEMBLY REMOVED, CRACKED OR BROKEN. Replacement of the glass assembly should be done by a licensed or qualified service person.

6. Install the upper grill. Refer to Fig. 15.

A) Line the rods of the grill up with the upper holes.
B) Place the rods in the holes and push up until the bottoms of the rods clear the valance.
C) Place the bottom of the rod into the lower holes and release. The grill will set down into place.

Figure 15

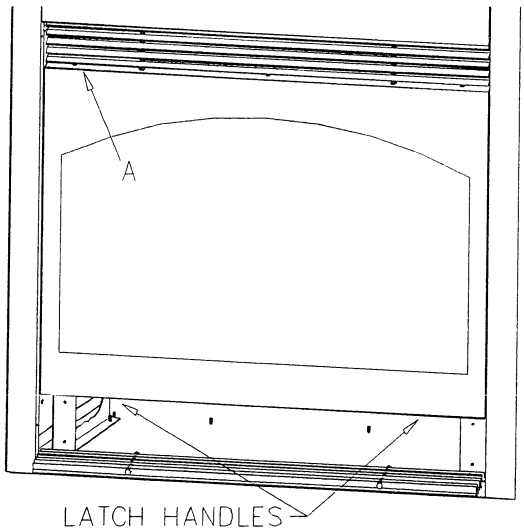

7. Install the lower grill. Refer to Figure 16.

A) Place one of the bolts through the hinge in the lower grill opening (A) & attach the 1/4" nut (B).
B) Repeat for remaining hinge.
C) Tighten both 1/4" nuts.

The grill is now in place and may be lowered for lighting purposes, etc.

FIGURE 16

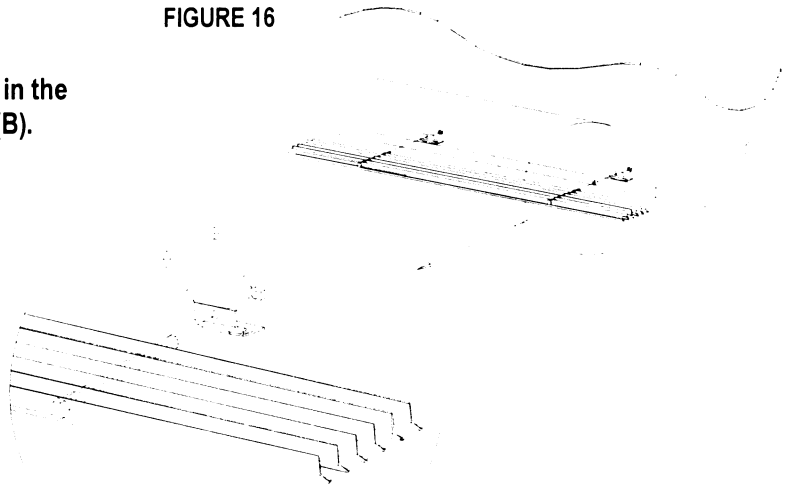

8. Slide the rubber thumb grip onto the damper control handle. (Included with components packet.)

J) DAMPER CONTROL OPERATION

This unit has been design-certified to be operated with the damper in the fully opened or completely closed positions, depending on the heat output desired.

To reduce the amount the heat entering the room, pull the damper control handle (A) down and slightly to the left to the fully open position. This allows more of the heat generated to exit through the flue rather than into the home through the upper grill.

If more heat is desired, slide the damper control handle (A) slightly to the right and release to it's original position.

NOTE: The damper position is located in the upper portion of the firebox and may be visually checked by looking through the front viewing glass. Refer to Item (B) in the figure below.

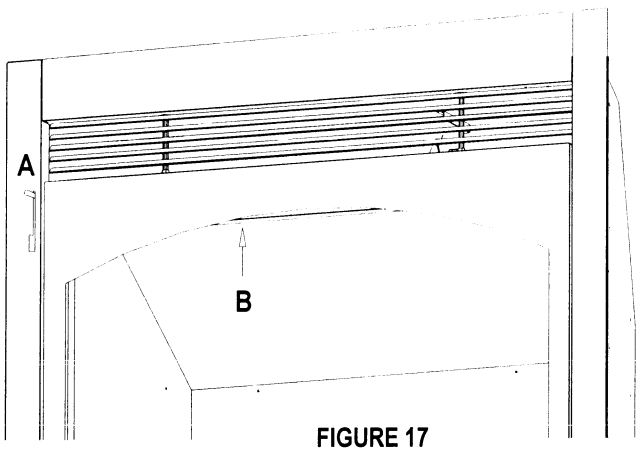

FIGURE 17

K) LIGHTING & SHUTDOWN

NOTE: Prior to lighting, check all fittings for leakage. This is accomplished by applying soapy water on all connections made. If there is any leakage, bubbles will appear at the point of connection. If bubbles occur, tighten the fittings until the bubbles no longer appear.

IMPORTANT: TEST ALL CONNECTIONS WHETHER FIELD OR FACTORY MADE.

NOTE: The appliance and its individual shutoff valve must be disconnected from the gas supply piping system during any pressure testing of that system at test pressures in excess of ½ psi.

NOTE: The appliance must be isolated from the gas supply piping system by closing its individual manual shut off valve during any pressure testing of the gas line at test pressures equal to or less than 1/2 psig (3.5 kPa).

Pressure check taps for the manifold (outgoing) and inlet (incoming) pressures are located in front of the gas valve. The top pressure tap is the manifold pressure and the bottom pressure tap is the incoming pressure. Follow instructions of page 26 for checking these pressures.

NOTE: Read 1-8 before lighting the unit for the first time. Refer to figure 18, page 25.

1. Open the lower grill by grasping the center of the top louver, and pull out and down.
2. Set the thermostat, if used, to the lowest setting. (If installed)
3. Turn off all electric power to the appliance. (Fan)
4. Push in control knob (A) slightly and turn clockwise ↘ to "OFF"'

Gas valve

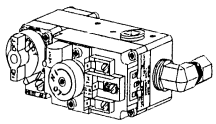

NOTE: Knob cannot be turned from "PILOT" to "Off" unless knob is pushed in slightly. Do not force.

5. Wait five (5) minutes to clear out any gas. If you then smell gas, STOP! Follow the safety information on page 1 of this installation manual. If you don't smell gas, go to the next step.

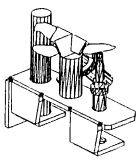

Pilot

6. Find the pilot - follow metal tube from gas control. The pilot is behind the burner cover inside the firebox.
7. Turn the control knob on gas valve counterclockwise ↙ to "PILOT".
8. Push in the control knob all the way and hold in. Press the piezo igniter button (B). The pilot will generally light with two or three pushes on the igniter. Hold the knob in for about one (1) minute after the pilot is lit. Release knob and it will pop back out. Pilot should remain lit. If it goes out, repeat steps 4 through 8.
   - If knob does not pop out when released, stop and immediately call your service technician or gas supplier.
   - If the pilot will not stay lit after several tries, turn the gas control knob to "OFF" and call your service technician or gas supplier.
9. Turn gas control knob counterclockwise ↙ to "ON".
10. The burner can now be turned 'on' or lit by depressing the ON/OFF rocker switch (C) located under the OR by setting the thermostat or remote control to the desired setting.

11. Close the lower grill.
12. Turn on electric power to the fireplace.

NOTE: When the unit is initially lit, condensation will appear on the glass, this is normal in all gas fireplaces, and will disappear in one to three minutes.

TO TURN THE BURNER OFF:

To turn the burner 'OFF', depress the ON/OFF rocker switch to 'OFF', flip 'off' the wall switch or adjust the setting on the thermostat or remote control. NOTE: The pilot will stay lit.

TO TURN THE PILOT OFF:

To turn off the pilot, push in and turn the control knob to the "off" position. DO NOT FORCE.

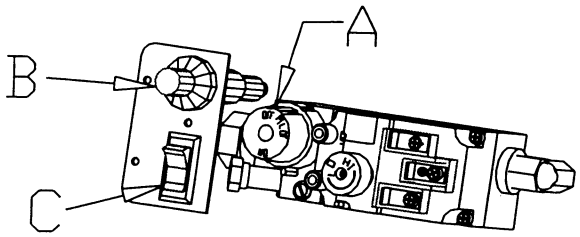

FIG. 18

NOTE: A PAINT SMELL WILL OCCUR DURING THE FIRST FEW HOURS OF BURNING. IT IS RECOMMENDED TO LEAVE THE FAN OFF DURING THIS PERIOD AS THIS WILL SPEED UP THE PAINT CURING PROCESS.

INITIAL BURN PERIOD

DUE TO THE MAKEUP OF THE LOGS & REFRACTORY, THE CURING PROCESS MAY TAKE UP TO 4 HOURS OF BURN TIME. DURING THIS PERIOD, THEY WILL DISCOLOR. ONCE THE CURING PROCESS IS COMPLETE, THE TRUE COLOR WILL RETURN. DO NOT BURN THIS FIREPLACE WITHOUT THE GLASS PROPERLY IN PLACE.

MAKE SURE THE HOMEOWNER IS AWARE OF THIS

NOTE: Children and adults should be alerted to the hazards of high surface temperature and should stay away to avoid burns or clothing ignition. Young children should be carefully supervised when they are in the same room as the appliance.

Clothing or other flammable material should not be placed on or near the appliance.

NOTE: THIS FIREPLACE MAY PRODUCE NOISES OF VARYING DEGREE AS IT HEATS AND COOLS TO DUE METAL EXPANSION AND CONTRACTION. THIS IS NORMAL AND DOES NOT AFFECT THE PERFORMANCE OR LONGEVITY OF THE FIREPLACE.

PRESSURE TESTING
MANIFOLD & INLET PRESSURE

IMPORTANT NOTICE: A pressure check tap for both the manifold (outgoing) and inlet (incoming) pressure has been incorporated into the valve. The top pressure tap is the manifold pressure and the bottom pressure tap measures the incoming pressure. Follow the instructions below for proper pressure testing procedures.

TO CHECK THE MANIFOLD PRESSURE:

1. Light pilot .
2. Loosen the manifold pressure tap [C] by turning the screw counter-clockwise.
3. Attach manometer to pressure tap using a 5/16" I.D. hose [E].
4. Turn black control knob [A] to the 'on' position.
5. Turn the burner on by depressing the rocker switch [B] to expose the 'red' and note manometer reading.
6. Turn the rocker switch [B] to the 'off' position.
7. Disconnect manometer hose and tighten screw (clockwise).
   Screw should be snug, do not over tighten.
8. Attach manometer to manifold pressure tap to verify that it is completely sealed.
   Manometer should read no pressure when the rocker switch is turned on..

NOTE: If manifold pressure reading is within the normal range, an incoming pressure check is not necessary. A too high or too low pressure reading warrants an inlet (incoming) gas pressure check.

TO CHECK THE INLET PRESSURE:

1. Loosen Inlet pressure tap screw [D] by turning screw counter-clockwise.
2. Attach manometer using a 5/16" I.D. hose [E].
3. Light the pilot.
4. Turn the black control knob [A] to the 'on' position. (Burner should not come on) and note manometer reading.
5. Turn the rocker switch [B] to the 'on' position and check the pressure to ensure that it stays near the maximum inlet pressure.
6. Turn the rocker switch [B] to the 'off' position.
7. Turn the pilot to the 'off' position.
8. Disconnect hose and tighten screw (clockwise). Screw should be snug, do not over tighten.
9. Relight pilot and turn the control knob [A] to the 'on' position. Attach manometer to the inlet pressure tap to verify that it is completely sealed. Manometer should read no pressure.

NOTE: If Inlet pressure reading is too high or too low, contact the gas company. Only a qualified gas service technician should adjust the incoming gas pressure.

CAUTION: A LOW PRESSURE READING CAN CAUSE DELAYED IGNITION.

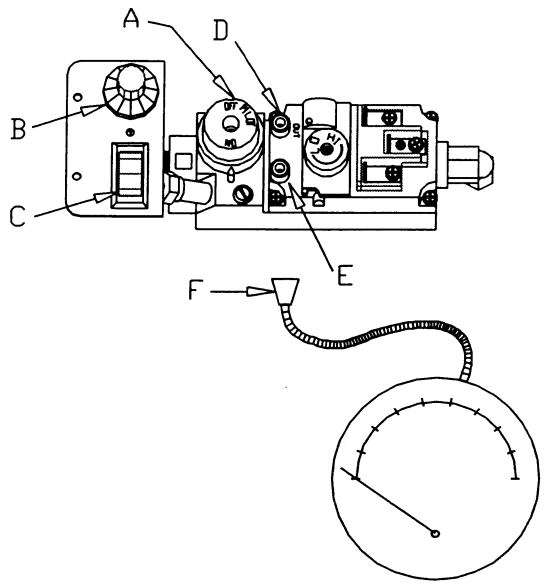

FIGURE 19

L) MAINTENANCE REQUIREMENTS

1. The appliance should be inspected at least once a year by a professional service person.

NOTE: INSTALLATION AND REPAIR SHOULD BE DONE ONLY BY A QUALIFIED SERVICE PERSON. THE APPLIANCE SHOULD BE INSPECTED BEFORE USE AND AT LEAST ANNUALLY BY A QUALIFIED SERVICE PERSON. MORE FREQUENT CLEANING MAY BE REQUIRED DUE TO EXCESSIVE LINT FROM CARPETING, BEDDING MATERIALS, ETC. IT IS IMPERATIVE THAT CONTROL COMPARTMENTS, BURNERS AND CIRCULATION AIR PASSAGEWAYS OF THE APPLIANCE BE KEPT CLEAN.

2. The compartment below the firebox (behind the lower grill) must be cleaned at least once a year, more frequent cleaning may be required due to excessive lint from carpeting, bedding materials, or other fibrous materials. It is imperative that the burner be cleaned once a year.

FAN
The fan should be disconnected from electrical current, and cleaned (vacuumed) every six months. The bearings are sealed and require no oiling.

VENT SYSTEM
Annual examination of the venting system by a qualified agency is required.

1. Remove the glass on the front of the unit.
2. For easier access, remove the logs.
3. Cover or remove the millivolt board.
4. Open the damper by-pass.
5. Examine proper sealing of the vent system.
6. Close damper by-pass.
7. Replace the logs, glass and upper grill.

IMPORTANT: ANY SAFETY SCREEN OR GUARD REMOVED FOR SERVICING MUST BE REPLACED PRIOR TO OPERATING THE APPLIANCE

CAUTION: LABEL ALL WIRES PRIOR TO DISCONNECTION WHEN SERVICING CONTROLS. WIRING ERRORS CAN CAUSE IMPROPER AND DANGEROUS OPERATION. VERIFY PROPER OPERATION AFTER SERVICING.

MILLIVOLT BOARD SYSTEM

1. Annual cleaning of the burner is required. The burner tube / cover may be removed for easier access.
2. Remove the logs.
3. Remove the burner tube / cover by loosening the two nuts securing it on each side of the burner cover.
4. Visually check for blocked port holes, especially near the pilot. Blocked port holes may cause delayed ignition.

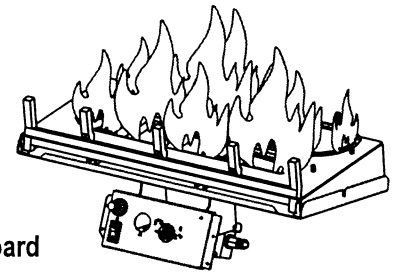

Millivolt board

5. Visually check the pilot light and burner when they are burning. See Figures above and below. The flames should be steady, not lifting or floating.

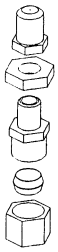

Burner Orifice

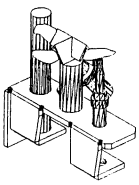

Pilot

GLASS CLEANING & REPLACEMENT

- Clean glass only when cool and only with non-abrasive cleansers.
- *Do not* operate this fireplace with the glass/frame assembly remove, cracked or broken.
- Replacement of the glass & gasket assembly, must only be performed by a licensed or qualified service person. DO NOT SUBSTITUTE MATERIALS.
- *Do not* strike or slam glass assembly shut.

CAUTION: KEEP THE APPLIANCE AREA CLEAR OF COMBUSTIBLE MATERIALS, SUCH AS GASOLINE AND OTHER FLAMMABLE VAPORS AND LIQUIDS.

M) TROUBLE SHOOTING GUIDE

NOTE: The regulator board includes the following items: Regulator, generator, pilot, piezo, electrode, rocker switch, burner, orifice and orifice holder. If any of these items are defective, contact your dealer for the appropriate repair / replacement procedures to follow.

WARNING: DO NOT ATTEMPT TO SERVICE THIS UNIT IF YOU ARE NOT A QUALIFIED INSTALLER OR REPAIRMAN.

1. If the unit fails to ignite a qualified service person should check the unit installation.
2. It is imperative that the control compartment, burner and circulation air passageways of the unit be kept clean. This is necessary to provide adequate combustion and ventilation air.
3. All of the working parts of this unit can be removed at one time. Before removing regulator board, check for loose wires.

PROBLEM	CAUSE	SOLUTION
Pilot won't light	Gas shut off.	Turn Gas 'On'.
	Gas line not bled out.	Hold valve knob in long enough to bleed out line.
	Not holding regulator valve in long enough.	Hold in longer.
Pilot won't stay lit	Not holding pilot button in long enough.	Hold button in longer to heat generator.
	Generator wires loose at valve terminals.	Reposition wire and tighten screws. See Fig. 20 for wiring diagram.
	Generator wire grounded out due to pinching of wires	Nuts on millivolt board may need to remove pinched wire. See Fig12B.
	Generator or Thermocouple has film build-up on tip.	With the generator and thermocouple tips cool, clean the upper 3/8" with a very fine emery cloth.
	Pilot orifice blocked.	Replace orifice with a new orifice of the exact size and type.

Figure 20

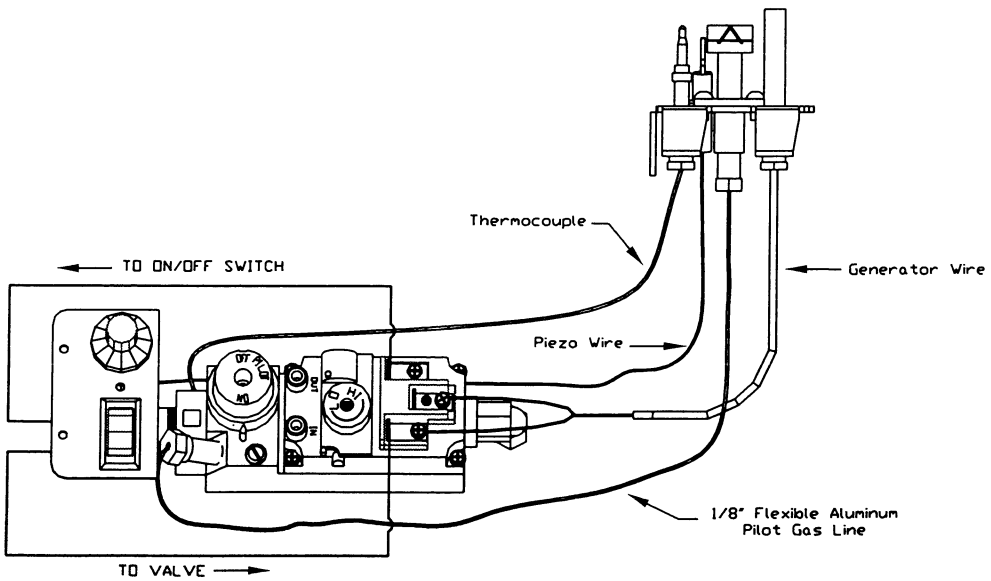

PROBLEM	CAUSE	SOLUTION
No spark when piezo button is depressed	The nut which holds the piezo in place is loose.	Tighten nut.
	Wire on back of piezo button is loose or off.	Put wire back into place.
	Wire from piezo to electrode is loose at electrode.	Reconnect wire.
	Electrode moved out of position.	Realign electrode with 1/8" space between it and pilot.
Burner won't light	Pilot not lit.	Relight pilot.
	Valve not turned to 'on'.	Turn valve to "on".
	Rocker switch not turned 'on'.	Press bottom of switch exposing the "on" indicator.
	Rocker switch wires not connected.	Check wiring diagram Figure 20 and ensure that all wires are secure.
	Remote control or thermostat not connected properly.	Connect properly or disconnect and and use the rocker switch only.
	Remote control or thermostat setting too low.	Set to desired temperature setting.
Burner won't stay lit	Wall switch or thermostat wires too thick or run more than 30 ft.	Disconnect wires. If burner stays lit, change location of wall switch or thermostat or use the rocker switch.
Flame too blue after 15 minutes of burning.	Burner tube venturi open too far.	Contact qualified service person to adjust venturi. Approximately 5/8" open-LP gas & 3/16" - Nat. gas.
Carbon build up inside of fireplace.	Incorrect log placement.	Check log placement, adjust.
	Burner tube venturi closed too far.	Contact qualified service person to adjust venturi.

REPLACEMENT PARTS

IMPORTANT: THESE REPLACEMENT PARTS ARE ONLY FOR THIS FIREPLACE MODEL AS MANUFACTURED. PREVIOUS MODELS MAY USE DIFFERENT COMPONENTS. DO NOT SUBSTITUTE COMPONENTS. CONTACT YOUR LOCAL DEALER.

MILLIVOLT BOARD AND PARTS

942-E400	Millivolt board - Natural Gas
942-E401	Millivolt board - LP Gas
700023	Toggle Switch
700032	Piezo Ignitor
700036	Millivolt Generator
700039	Hi/Lo Adjustable Regulator - Natural Gas
700040	Hi/Lo Adjustable Regulator - LP Gas
700053	NG-30 Sec. Dropout Valve - Robertshaw
700054	LP-30 Sec. Dropout Valve - Robertshaw
700055	NG-30 Sec. Pilot Assembly
700056	LP Gas 30-Sec. Pilot Assembly
700059	Thermocouple - 30 Sec.
700060	Flexible Pilot Tubing
700203	Manual Shut off Valve
700213	18" Flexible Gas Line
700224	3/8" x 24" Flexible Gas Line - Valve to Burner Orifice
700267	Natural Gas Pilot Orifice
700266	LP Gas Pilot Orifice
700230	Natural Gas orifice - #30
700249	LP Gas orifice - #49
OCK330	Natural Gas Conversion Kit
OCK349	LP Gas Conversion Kit
936035	Burner Tube
942E35	Burner Cover with brackets

FAN AND FAN PARTS

404-4	Limit Switch Assembly
600-1	Fan Kit
600085	Speed Control
600087	Speed Control Assembly - Dashboard

REMOTE CONTROLS / THERMOSTAT

796-1	Remote Control with Thermostat
797-1	Remote Control
791-2	Remote Bracket - Dashboard
700038	Wall-Mount Thermostat

GLASS & GLASS PARTS

70001T	Replacement Glass Assembly - includes 21" x 35" glass & gasket
900006	Tadpole glass gasket
942005	Replacement Valance - only

TERMINATION KITS / PARTS

844	DV Termination Kit - 3 ft.
845	DV Termination Kit - 8 ft.
846	DV Extension Kit - 6 ft.
847	Vinyl Siding Protector
842-060	Firestop
94258A	Restrictor (15' - 40' vertical terminations)

MISCELLANEOUS

617	Lintel Iron
300624	12 oz. Aerosal touch-up paint - Satin Black

GRILL SETS

500354	Black Grill Set
500352	Brass Grill Set
500353	Brass Accent Grill Set

UPPER & LOWER GRILLS

301113	Upper Grill - Black
301114	Upper Grill - Brass
301115	Upper Grill - Brass Accent
302114	Lower Grill - Brass
842003	Lower Grill - Black
302101	Lower Grill - Brass Accent

GLASS FRAMES & BRASS TRIM

942005	Arched Glass Frame
500942	Arched Brass Trim (2 pc.)
942REC	Rectangular Glass Frame

LOGS / REFRACTORY

94250D	8 pc. Log set
	BB-Log
	BC-Log
	BD-Log
	AP-Log
	AR-Log
	AY-Log
	AZ-Log
	JA--Log
942900A	3 pc. Refractory Brick Panels- Back & sides
942902	Top Refractory Brick Panel
942900B	Back Refractory Panel
942900S	Side Refractory Panel (1 pc.)

PATENTS: #5.931.154, #5.967.139, #6.004.493
PATENT PENDING

Model #942 DV - US INSTALLATIONS ONLY

www.kozyheat.com

MANUFACTURED BY:
Hussong Manufacturing Company, Inc.
204 Industrial Park Drive
Lakefield, MN 56150

Revised February 2003

K O Z Y H E A T

Quality Fireplaces For Life

LIFETIME WARRANTY

THIS LIFETIME WARRANTY COVERAGE WILL BE EXTENDED AS DESCRIBED BELOW PROVIDED ALL WARRANTY CONDITIONS AND REQUIREMENTS ARE MET AS OUTLINED IN THE 10 YEAR LIMITED WARRANTY POLICY.

LIFETIME WARRANTY COVERAGE

LIFETIME WARRANTY IS EXTENDED AS FOLLOWS: Hussong Manufacturing warranties to the original purchaser that the firebox, heat exchanger, fiber logs, burner tube and glass of this Kozy Heat fireplace will not be defective in material or workmanship under normal use and service for as long as you own this product. If any of these components fail due to defects in material or workmanship under normal use and service, Hussong Manufacturing Co., Inc. will, at its sole discretion, repair or replace the defective component. This LIFETIME WARRANTY does not cover any installation, labor, transportation or other indirect costs arising from defective components.

LIMITATION OF LIABILITY

This Lifetime warranty will be void if the fireplace is not installed by a qualified installer and according to the installation instructions. Use of unauthorized components will make this warranty null and void. This lifetime warranty also is void if the fireplace is not operated, at all times, according to the operating instructions furnished. This warranty is limited to defects in material and workmanship of components specified. It does not apply to any product that has been subject to negligence, misapplication, improper installation.

No person is authorized to extend the time of this Lifetime warranty or to accept on Hussong Manufacturing Co., Inc.'s behalf any additional obligation of liability connected with the unit.

Hussong Manufacturing Co., Inc. may fully discharge all obligations with respect to this Lifetime warranty by refunding the wholesale price of the defective component(s).

It is expressly agreed and understood that this Lifetime warranty is Hussong Manufacturing Co., Inc.'s sole obligation and original purchaser's exclusive remedy for defective fireplace equipment. Hussong Manufacturing Co., Inc. shall not be liable for any consequential, incidental or contingent damages whatsoever other than those incurred by Hussong Manufacturing Co., Inc. to repair or replace the defective co mponent. The foregoing warranty is exclusive and in lieu of all other expressed warranties. Hussong Manufacturing Co., Inc. shall not be held to implied warranties, including but not limited to the implied warranties or merchantability and fitness for a particular purpose. This lifetime warranty replaces all previous lifetime warranty policies.

Hussong Manufacturing Co., Inc. reserves the right to make changes at any time, without notice, in design, material, specifications and prices. Hussong Manufacturing Co., Inc. reserves the right to discontinue models and products.

JUNE 1998

(CUT ALONG DOTTED LINE)

TO ACTIVATE THIS LIFETIME WARRANTY COVERAGE, THIS REGISTRATION CARD MUST BE COMPLETED AND MAILED WITH YOUR COMPLETED 10 YEAR LIMITED WARRANTY FORM WITHIN 30 DAYS OF INSTALLATION.

PURCHASER'S NAME: _____ **INSTALLATION DATE:** _____

ADDRESS: _____ **MODEL#:** _____ **SERIAL #:** _____

_____ **TELEPHONE #** _____

INSTALLER NAME: _____

ADDRESS: _____ **TELEPHONE #** _____

_____