QUALITY FIREPLACES FOR LIFE.

KOZY HEAT FIREPLACES | WOODBURING Z 42 & Z 42-CD

Z 42 CD (cast doors)
with black grills

WOODBURNING | Z 42 & Z 42-CD

ZERO CLEARANCE FIREPLACES

Z 42 w/Prairie design screen doors & black grills

THE Z 42 & Z 42-CD

For a wood-fired hearth that's at home anywhere, look no further than Kozy Heat's **Z 42** EPA Certified Fireplace. Kozy Heat's **Z 42** Non-Catalytic fireplace decreases flammable creosote within the chimney by 90%, and burns up to 33% less fuel. The end result is a clean burn, more warmth with less wood. So relax, kick back and enjoy the flames, knowing you've done your part, not just for the environment, but for your fuel budget.

FIREPLACE OPTIONS & ACCESSORIES

Fronts

Black Prairie screen door

Black screen door

These decorative doors are for use with model #Z 42 single door only.

Z 42 CD
(two black cast doors)

Grills

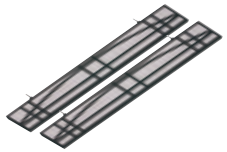

Mission design grills

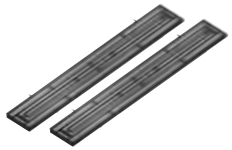

Prairie design grills

Black grills not shown

Z 42 standard with black grills

SPECIFICATIONS

Model	Z 42	Z 42-CD
Height	38”	38”
Width	42”	42”
Depth	26”	26”
Weight	525 lbs.	525 lbs.
Firebox	2.98 cu. ft.	2.98 cu. ft.
Glass Size	15-1/2” x 28”	12” x 14”
Fuel: Wood	60,000 / 8,000	60,000 / 8,000
Efficiency	77%	77%
EPA Emissions Rate	3.34 g/hr	3.34 g/hr
Air-Seal Doors	10 ga. steel	Twin air-seal cast iron
Decorative Grills	Optional	Optional
Decorative Screen Fronts	Optional	N/A
Lintel Iron	Optional	Optional
Fan Kit	Optional	Optional
Heat Duct Kit(s)	Optional	Optional

Clearances

Model	Z 42	Z 42-CD
Within Enclosure Area:		
Unit to back wall	0”	0”
Unit to side wall	0”	0”
Duct boots to framing	0”	0”
Top stand-off to header	0”	0”
Exposed Area:		
Wallboard to faceplate top edge/sides	0”	0”
Fuel door to an adjacent sidewall	8”	8”
Unit front	36”	36”
Top of fireplace to an 8” mantel	12”	12”
Remote outlet air gril to ceiling	2”	2”

Z 42 & Z 42-CD

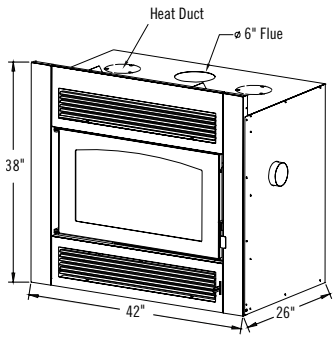

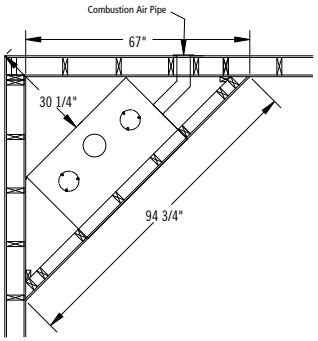

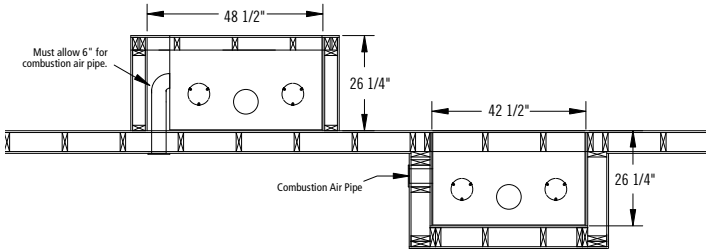

EPA Certified

Refer to the installation manuals for complete installation & venting requirements.
See additional mantel clearance configurations in the installation manual.

Features, Options & Specifications are subject to change.

Features

- Large burning area - fits up to 22” logs
- Adapts to 6” Class “A” HT-Type (2,100º) all fuel chimney
- 10 year limited warranty
- (2) heat duct knock-outs for optional ducting (#970 kit required)
- Air-wash system (keeps viewing area cleaner)* *Although the air wash system assists in keeping the glass cleaner, regular cleaning and maintenance are required.

Safety

- Tested by Intertek Testing Services (formerly Warnock Hersey)
  Complies with U.L. 127 - U.L. Standard for Safety, Factory Built Fireplaces (6/98)
- U.L. 127 - 1999/CAN/ULC S610-M98 For US and Canadian Installations
- Non-catalytic
- Sealed combustion chamber
- Uses 100% outside air for combustion
- High quality pyro-ceram glass

In order to continually provide the highest quality product available, features/options, specifications & dimensions are subject to change. Refer to the unit installation manual for complete installation instructions. Installation must conform with local building codes. **In some regions it may be possible that this appliance qualifies for an energy rebate. See your local dealer for details regarding promotions and qualifications.**

Product Line:

For complete information on the Kozy Heat product line, please contact us at:

Manufactured by Hussong Mfg. Co., Inc.
204 Industrial Park Drive, Lakefield, MN 56150
Phone 1-800-253-4904 www.kozyheat.com